MITSUBISHI ELECTRIC

Changes for the Better

FACTORY AUTOMATION

Automating the World

MELFA FAMILY

Industrial robots

- **Robots for collaborative applications**
- **Vertical/Horizontal articulated robots**
- **High-performance controllers**
- **Programming software**
- **Simulation**

Automating the World

Our Factory Automation business is focused on "Automating the World" to make it a better, more sustainable environment supporting manufacturing and society, celebrating diversity and contributing towards an active and fulfilling role.

Mitsubishi Electric is involved in many areas including the following:

Energy and Electric Systems
A wide range of power and electrical products from generators to large-scale displays.

Electronic Devices
A wide portfolio of cutting-edge semiconductor devices for systems and products.

Home Appliance
Dependable consumer products like air conditioners and home entertainment systems.

Information and Communication Systems
Commercial and consumer-centric equipment, products and systems.

Industrial Automation Systems
Maximizing productivity and efficiency with cutting-edge automation technology.

SUSTAINABLE DEVELOPMENT GOALS

The Mitsubishi Electric Group is actively solving social issues, such as decarbonization and labor shortages, by providing production sites with energy-saving equipment and solutions that utilize automation systems, thereby helping towards a sustainable society.

Contents

Features in detail	**4–5**	
Work alongside human operators	**6–7**	
Precision and flexibility	**8–9**	
The technology in detail	**10–11**	
Software for industrial robots	**12**	
Technical information		

Features in detail

Robots from € 1.65/hr

Calculated on the basis of their average service life, around 6–7 years in typical applications, Mitsubishi Electric robots have a surprisingly low total cost of ownership at around € 1.65 per hour for both purchasing and operation.

Versatility

Small robots have been used in more than 100,000 applications in widely differing fields since 1978 – and what is more they work around the clock, 24 hours a day, 7 days a week.

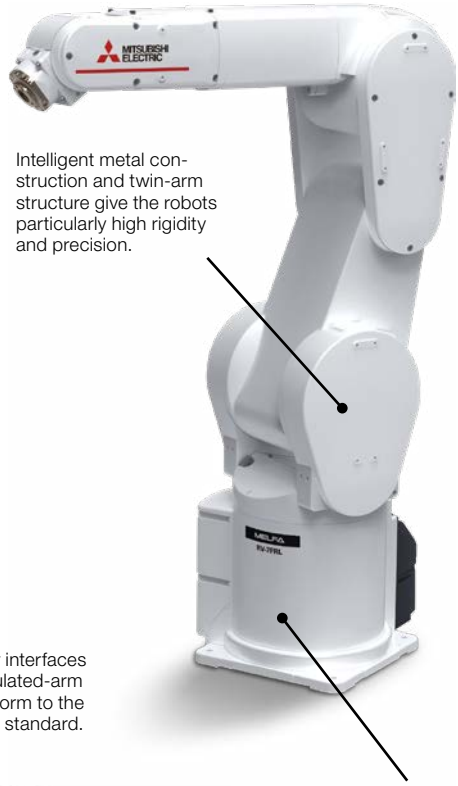

Intelligent metal construction and twin-arm structure give the robots particularly high rigidity and precision.

The gripper interfaces of the articulated-arm robots conform to the ISO 9409-1 standard.

Mitsubishi Electric servo motors of the latest generation help to provide exceptional repeatability performance.

A very compact design takes up minimum space for applications in cramped quarters.

Simple programming

A powerful range of robots needs an equally powerful and user-friendly programming interface. Mitsubishi Electric's RT ToolBox3 is a powerful programming and simulation software tool tailored precisely for the needs of your robots.

Network capabilities

Network connections like Ethernet, Profibus, PROFINET, EtherCAT, DeviceNet®, Modbus TCP and CC-Link make it easy to integrate Mitsubishi Electric robot controllers in to larger systems, providing users with access to every step of the process. Also you can connect the robot via OPC UA standard.

Work alongside human operators

Integrate. Collaborate.

Mitsubishi Electric's robot for collaborative applications, the MELFA ASSISTA, has been developed to work alongside human operators without the need for guards or safety fences, while meeting new requirements for adequate distancing of workers in manufacturing sites. The robot offers maximum safety, such as collision detection and strict compliance with the international safety and robotic standards ISO 10218-1 and ISO/TS15066. Furthermore, it offers durability combined with ease of use and programming, while maintaining very high positional repeatability of ±0.03 mm* by a rated payload of 5 kg and reach radius of 910 mm.

* Commonly offered repeat accuracy by robots for collaborative applications of ±0.1 mm.

Easy control

Fast and intuitive robot setup via dedicated control panel

Robot movements can be taught and recorded quickly via a dedicated control panel on the MELFA ASSISTA arm, doing away with separate teaching boxes required for conventional industrial robots.

The control panel features a simple design with a minimum number of buttons for simplicity, enabling even inexperienced users without expert knowledge of robots to set up the system with ease.

A bright, always visible 6 colour LED ring mounted around the robot's forearm clearly displays the status of the robot.

Easy programming

Simplified application development using intuitive flow-chart programing

The RT VisualBox programming tool developed by Mitsubishi Electric enables operating sequences to be created intuitively by linking block diagrams in a chain of events, including connection with other devices such as robot hands and cameras. Fast program-development and design time help to reduce system TCO.

Easy connecting

A wide variety of components and applications

ASSISTA offers a wide variety of components – grippers, fingers, vision and other peripherals – developed by a group of organizations known as MELFA robot partners.

These tools can easily be setup and configured for your application.

ASSISTA can also be configured to move freely as as part of an AGV/ AMR* or as a mobile robot.

* AGV: Automated Guided Vehicle
AMR: Autonomous Mobile Robot

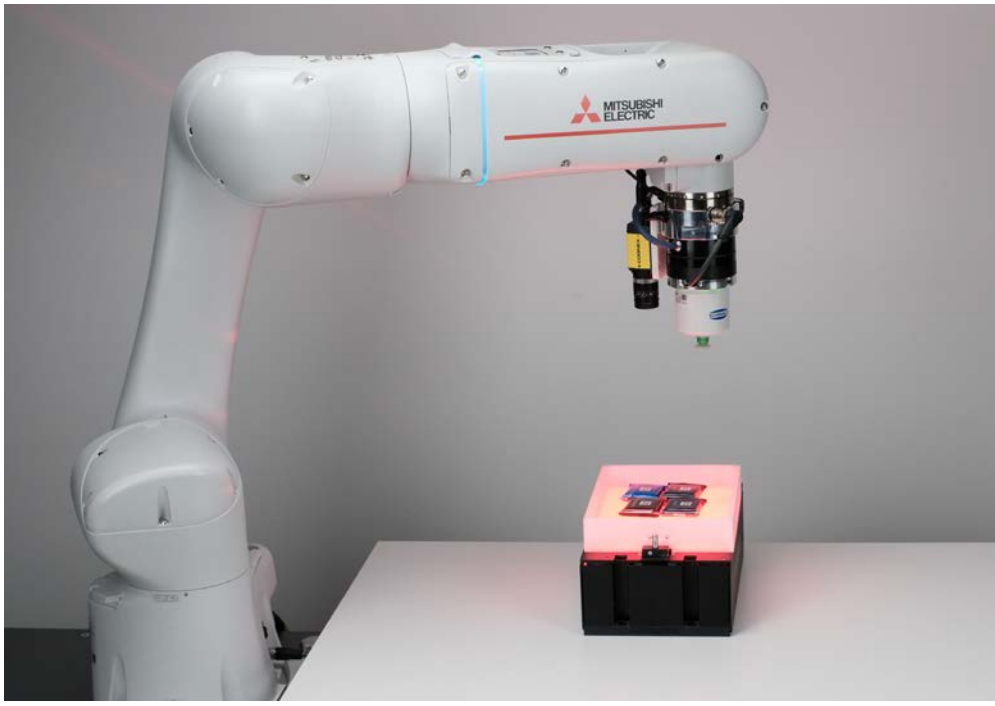

Grip with ASSISTA

Simply connect grippers to robot arm

The ASSISTA set-up wizard provides operators with an easier more intuitive methodology for gripper configurations.

View with ASSISTA

"RT VisualBox" proprietary engineering tool

The vision camera focus adjustment and work registration can be configured simply by touching the screen. This means that you can use it even without special robot knowledge.

Precision and flexibility

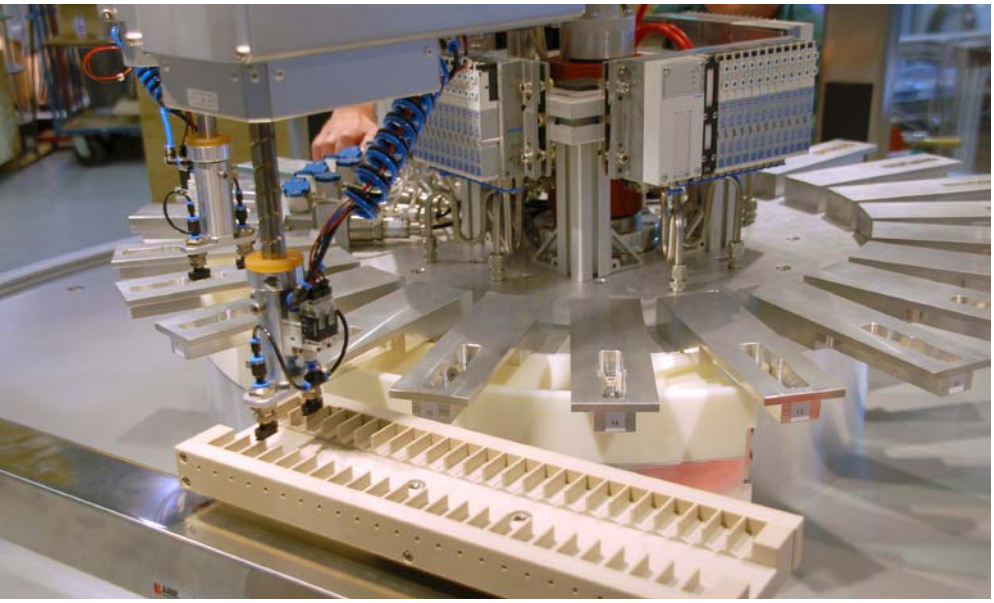

Pharmaceutical industry

Modular control concepts and pharmaceutical industry certification make MELFA robots the ideal partner in the life sciences sector. Integral database connection and an all-embracing control concept facilitate modular and flexible applications in any field where quality and production data have to be backed up in a comprehensible manner.

Food and drink

Increasing hygiene demands, a variety of products and the traceability of production processes are ensured with MELFA robots – now and in the future.

Innovative details and stringent guidelines for MELFA robots guarantee assured quality even in ultra-clean applications.

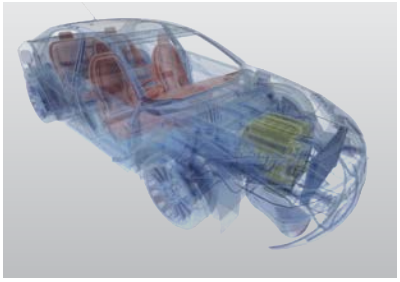

Automotive industry

Highly accurate and extremely flexible MELFA robots are used whenever every little detail matters – haptic measurement, quality assurance and assembly of complex components. MELFA robots carry out their tasks around the clock and at full speed.

Packaging

High-performance and flexibility are a matter of course for MELFA robots. It goes equally without saying that all Mitsubishi Electric automation components can be incorporated. These include additional axes, PLC controllers and operating terminals. Furthermore, cameras can be connected and robots synchronised with conveyor belts. These functions enable packaging tasks to be carried out reliably, quickly and continuously.

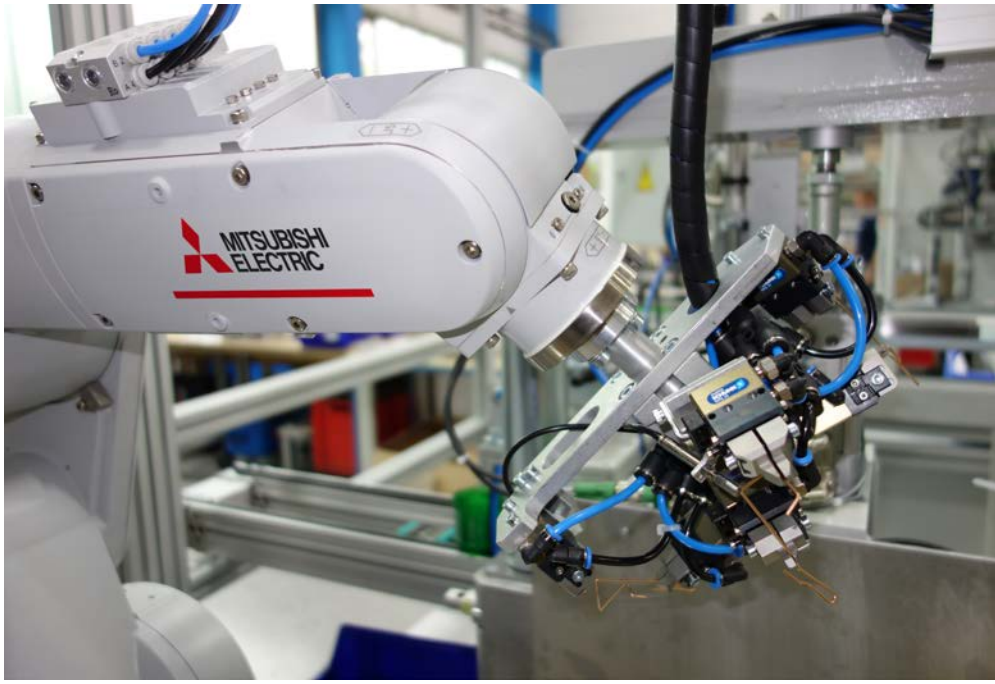

Electronics and mechanical engineering

Mitsubishi Electric provides a wide range of products from SCARA robots for the micro assembly of miniature components to fully sealed articulated arm robots. There are no applications which are not suitable for MELFA robots. Whether cleanroom or dirty, oily and dusty environments, the product range always includes the right robot for your application.

Training

Learning from practical experience – a goal which can be achieved in a training environment with the compact, lightweight MELFA robots. Simple programming, simulation options and experienced teachers make entry into the field of robotics easy.

No limits – thanks to standard real-time interfaces and simple programming, MELFA robots provide all sorts of options for using the robots as manipulators, even for complex university research projects.

The technology in detail

More safety

The DIN ISO-10218 safety standard is common to all robots and therefore guarantees safe operation in all applications. Mitsubishi Electric's supplementary product range including safety controllers enables the robots to be integrated into a common safety concept. Ready-made example projects make it possible for anyone to put together even complex systems quickly and effectively.

The optional "MELFA SafePlus" safety technology for the FR series robot controllers has functions available like reduced safe speed control, safe limited control range and safe torque monitoring, which can be activated via safety inputs. Logic for each safe I/O can be edited and in combination with the postion monitoring function a safe system can be constructed without using a Safety PLC.

Based on these functions, saving of safety equipment and a reduction of safeguarded space is possible which leads to a reduction of cost and space while meeting all safety requirements at the same time.

Sensor-controlled robots with image processing

Mitsubishi Electric's industrial robots can be connected to any object recognition camera system via the Gigabit Ethernet interface of the robot controller. This enables static and moving parts to be detected with the correct positional information.

The possible uses of sensor-controlled robots in factory automation are manifold. They range from component assembly via quality control and the reworking of workpieces to the location and removal of objects from a conveyor belt.

FR-R series – full PLC functionality in the robot

As robots are never installed on a stand-alone basis, the system must be easy to integrate into its working environment to enable it to communicate with PLC and motion systems as well as operating panels and other systems. Together with the modular robot CPU, the Mitsubishi Electric iQ Platform provides the ideal basis for integrating the full functionality of a PLC into the robot controller – once again demonstrating the company's role as a pioneer in automation technology.

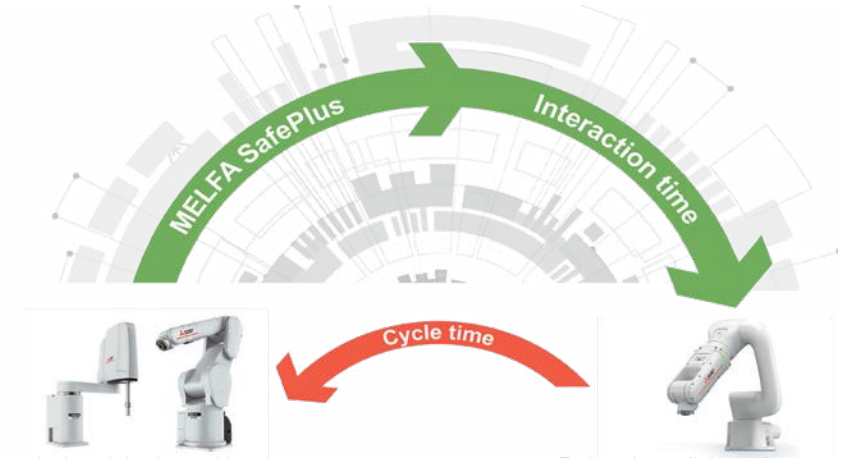

Industrial robot with standard Safety functions

Robot for collaborative applications

Simple integration into complex applications

Up to eight additional axes can be connected directly to the robot controller with just one cable. Of these, two axes can be used as additional interpolating axes, e.g. as the seventh and eighth robot axis.

The special feature compared with other systems is that all additionally connected axes can be programmed in exactly the same way as the robot, using the same Teaching-Box or the standard RT ToolBox3 software. This avoids the additional expense of software, training and programming.

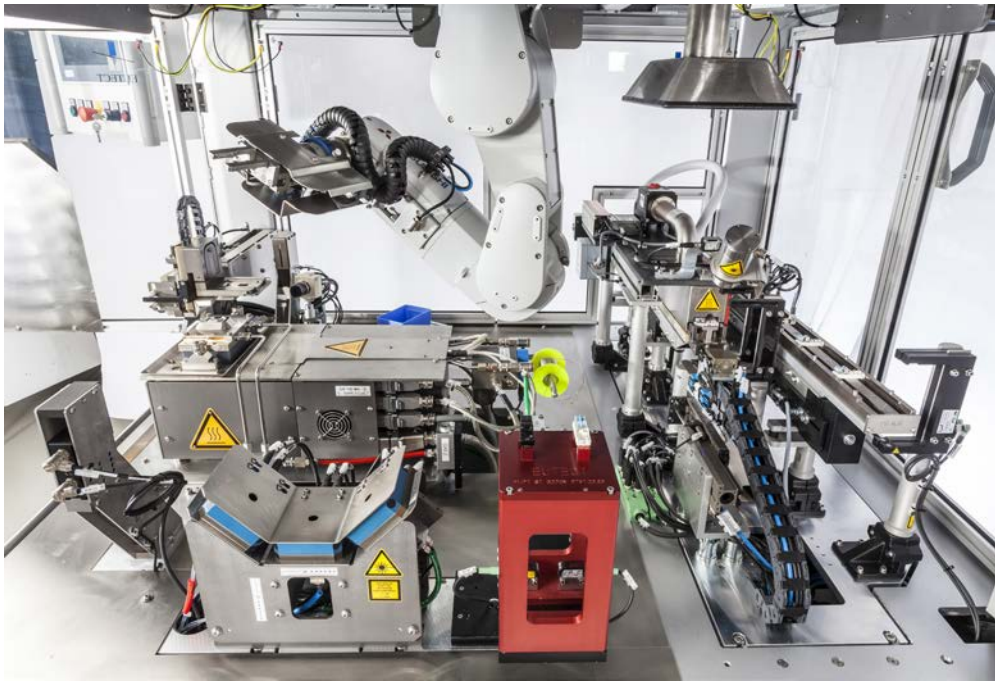

More efficient monitoring and maintenance functions

Direct connection of the company's infrastructure GOT operating terminal via Ethernet opens up a number of monitoring, control and maintenance functions for the robot. The correction of taught points, the backup and restore function, the entry of production data, and the selection and control of processes are just some of the options provided by the Mitsubishi Electric operating terminal in conjunction with MELFA robots.

Open communication for PC connection

The robot controller can be connected to an MES system, for example for easily and quickly changing manufacturing sequences without stopping production.

Furthermore, the robot can be initiated for any kind of movement in real time. Flexible and complex movements, which are generated graphically on the PC, for example, can be realised in this way. ROS2 drivers for MELFA robots enable seamless data exchange between controllers and software modules.

Programming and simulation

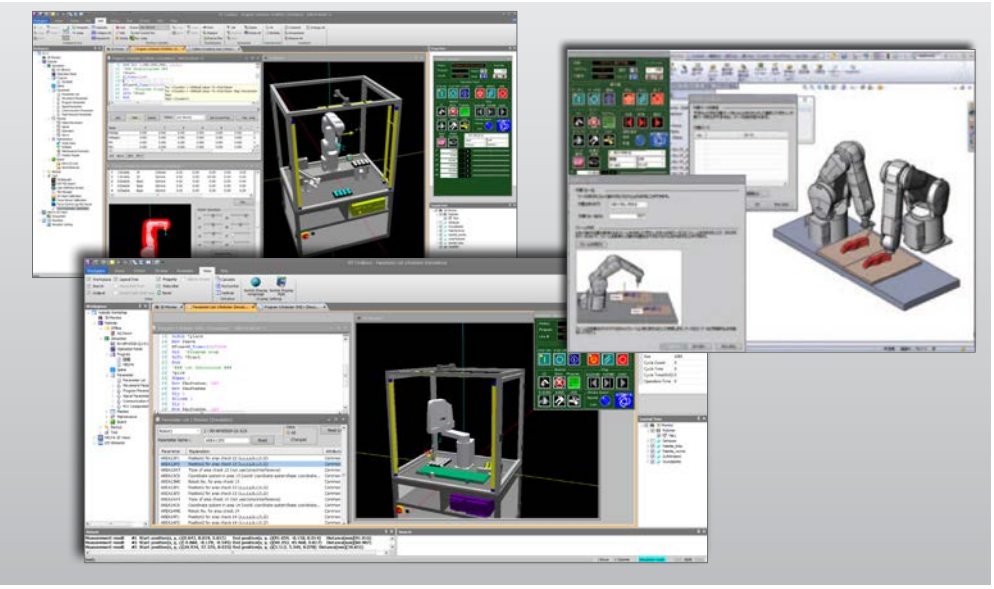

Simulation of a Mitsubishi Electric industrial robot directly in an application

High-performance industrial robots also require high-performance software. For this reason, more and more automation engineers are opting for the versatile and convenient Mitsubishi Electric software. All tasks, such as the creation of projects, programming and simulation, are implemented intuitively and mesh perfectly with one another. This results in optimum movement sequences in the shortest possible installation and commissioning time.

Programming

Offline and online programming with simulation.

Simulation

3D-CAD import and up to 16 robots can be simulated in one project; additional axes can be connected and positions taught directly in the simulation.

Parameters

Parameter structure for the simple parameterisation of functions; complete overview of all parameters with display of modified values only.

Maintenance

Full backup and restore function and monitoring of service intervals, production runtimes and product cycles.

Monitoring

Display of load currents, position values, variables and variable positions. Monitoring of switching signals, program execution and fault history.

Documentation

Full project documentation with output of modified parameters, program code and positions.

3D-simulation with RT ToolBox3 Pro

The RT ToolBox3 Pro add-in tool for SolidWorks enables MELFA robots to be simulated in the CAD environment on a PC, and converts the workpiece paths into robot position data.

Supplementing the SolidWorks platform by the addition of RT ToolBox3 Pro extends the simulation functions and opens up new simulation possibilities.

- The CAD data of the system can be directly imported
- Grippers can be connected directly to the robot
- Handling of workpieces
- Offline teaching in a 3D environment
- Creation of robot programs
- Collision-checking between robot and system environment

RT VisualBox

The RT VisualBox programming tool is an intuitive engineering software for MELFA ASSISTA for quick, easy system deployment. It enables operating sequences to be created intuitively by linking block diagrams in a chain of events, including connection with other devices such as robot hands and cameras.

The convenient operating terminal for mobile teaching

The R86TB is a powerful operating panel for carrying out all tasks directly at the robot, from controlling the robot and displaying the loads by means of the input/output display to complete program creation and parameterisation. The comprehensive functions ensure optimum utilisation of the robot system and thus reduce setup times.

The integral USB port enables data to be exchanged conveniently, and complete controller backups can be uploaded and downloaded through a memory stick.

Technical Information Section

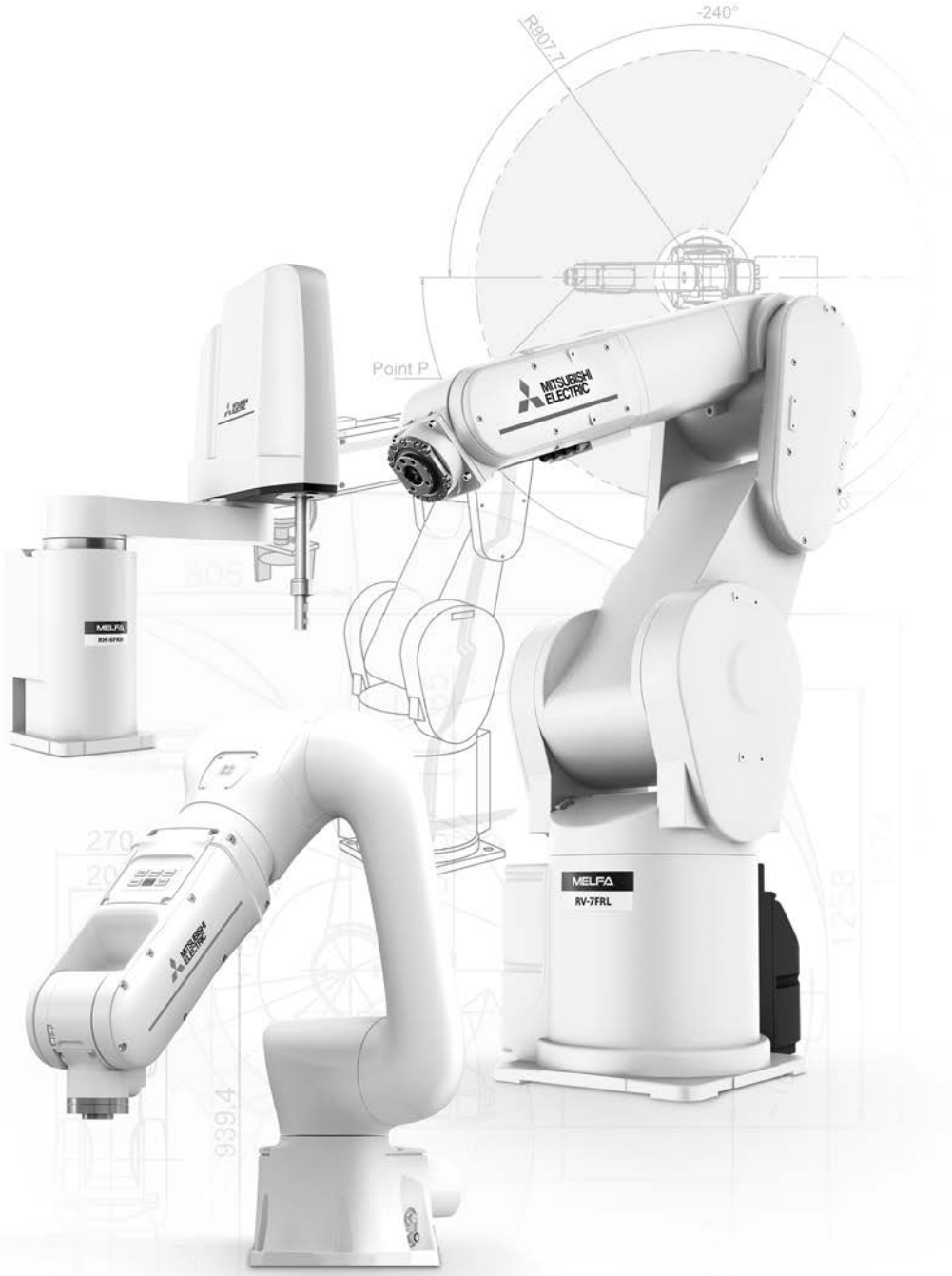

Further service supplies

This product catalogue is designed to give an overview of the extensive range of Mitsubishi Electric MELFA RV and RH series. If you cannot find the information you require in this catalogue, there are a number of ways you can get further details on configuration and technical issues, pricing and availability.

For technical issues visit the https://emea.mitsubishielectric.com/fa website. Our website provides a simple and fast way of accessing further technical data and up to the minute details on our products and services. Manuals and catalogues are available in several different languages and can be downloaded for free.

For technical, configuration, pricing and availability issues contact our distributors and partners. Mitsubishi Electric partners and distributors are only too happy to help answer your technical questions or help with configuration building. For a list of Mitsubishi Electric partners please see the back of this catalogue or alternatively take a look at the “contact us” section of our website.

About this product catalogue

This catalogue is a guide to the range of products available. For detailed configuration rules, system building, installation and configuration the associated product manuals must be read. You must satisfy yourself that any system you design with the products in this catalogue is fit for purpose, meets your requires and conforms to the product configuration rules as defined in the product manuals.

Specifications are subject to change without notice. All trademarks acknowledged. © Mitsubishi Electric Europe B.V., Factory.

The products of Mitsubishi Electric Europe B.V., that are listed and described in this document, are neither subject to approval for export nor subject to the Dual-Use List.

Contents

1 Robots

- Overview robots 16
- Standard high end functions 22
- Industrial robots RV-2FR(L)(B) 33
- Industrial robots RV-4FRLM. 35
- Industrial robots RV-7FRM/7FRLM/7FRLLM 37
- Industrial robots RV-13FRM/RV-13FRLM/RV-20FRM/RV-20FRLM 39
- Industrial robots RV-35/50/80FR 41
- Industrial robots RV-5AS 43
- Industrial robots RV-8CRL/RV-12CRL 45
- Industrial robots RH-1FRHR 47
- Industrial robots RH-3FRHR 49
- Industrial robots RH-FRH. 51
- Industrial robots RH-CRH 54
- System overview 57

2 Controller

- Controller. 58
- Dimensions of the control units 60

3 Accessories

- Teaching box. 61
- Force sensor, MELFA SafePlus 62
- Wiring set 63
- Valve sets, bellows 64
- Adaptor cables, connectors. 66
- Tubes, extension cables 67
- PC and I/O connection cables, controller protection box, buffer batteries 68
- Automatic cable retraction system. 69
- General overview of options. 70

4 Programming language

- MELFA-BASIC. 72

5 Software

- RT Toolbox3 73
- RT Toolbox3 Pro 74
- RT VisualBox. 75
- 3D simulation software MELSOFT Gemini 76
- Digital Solutions platform GENESIS 77
- AI-driven visual inspection software MELSOFT VIXIO. 78

Index. 79

A complete lineup

Large range of robot models makes selection easy

Mitsubishi Electric produces a comprehensive range of robot models to cater to the full spectrum of modern needs. All Mitsubishi Electric robots are powerful, fast and compact – that goes almost without saying.

The product range includes the almost universal articulated-arm robots with 6 degrees of freedom and payloads of 2 kg to 80 kg and SCARA robots with 4 degrees of freedom and payloads of 3 kg to 20 kg for assembly and palletising tasks.

Three special models are available, the unique robot MELFA ASSISTA with a payload of 5 kg, which can share a workspace with humans, the cost effective models RV-8CRL and RV-12CRL as well as the flexible high-speed SCARA robots for ceiling mounting.

Vertical, multiple-joint type (RV)

Model	RV-2FR(B)	RV-2FRL(B)	RV-4FRL	RV-7FR	RV-7FRL	RV-7FRLL	RV-13FR	RV-13FRL
R. accuracy (mm)	± 0.02	± 0.02	± 0.02	± 0.02	± 0.02	± 0.06	± 0.05	± 0.05
Load capatity (kg)	2	2	4	7	7	7	13	13
Reach (mm)	504	648	649	713	908	1503	1094	1388
IP class	IP30	IP30	IP40/(M)IP67	IP40/(M)IP67	IP40/(M)IP67	IP40/(M)IP67	IP40/(M)IP67	IP40/(M)IP67
ISO 14644-1 (full load)	8	—	7	7	5	5	7	7
Clean Room Design	—	—	ISO class 3	ISO class 3	ISO class 3	ISO class 3	ISO class 3	ISO class 3
Special Version	—	—	ESD/ATEX/NRTL	ESD/ATEX/NRTL	ESD/ATEX/NRTL	ESD/ATEX/NRTL	ESD/ATEX/NRTL	ESD/ATEX/NRTL
Controller	**CR800-D/CR800-R + R16RTCPU**							

Model	RV-20FR	RV-20FRL	RV-35/50/80FR	RV-5AS	RV-8CRL	RV-12CRL
R. accuracy (mm)	± 0.05	± 0.05	± 0.06	± 0.03	± 0.02	± 0.04
Load capatity (kg)	20	20	35/50/80	5	8	12
Reach (mm)	1094	1388	2100	916	931	1504
IP class	IP40/(M)IP67	IP40/(M)IP67	IP65/(M)IP67	IP54	IP65	IP65
ISO 14644-1 (full load)	5	-	—	5	6	—
Clean Room Design	ISO class 3	ISO class 3	—	ISO class 5	—	—
Special Version	ESD/ATEX/NRTL	ESD/ATEX	—	ESD/Food grate H1 grease	—	—
	CR800-D/CR800-R + R16RTCPU	**CR860 -D/CR860-R + R16RTCPU**	**CR800-D**			

Advanced intelligence, safety and integration

The concept of FR robots offers a simple approach to advanced and flexible production to handle all automation needs. This concept is based on 3 key features.

- Intelligence: “MELFA Smart Plus” offers greater accuracy and shorter startup times, making installation simpler and more advanced tasks possible.
- Safety: A comprehensive range of safety functions, including position and speed monitoring, allow work to be conducted in cooperation with people.
- Integration: MELSEC iQ-R compatible robot controller and the e-F@ctory integrated FA solution offers seamless integration of robots and IT systems.

Horizontal articulated robots (RH)

Model	RH-1FRHR	RH-3FRHR	RH-3FRH5515N	RH-6FRH5520N	RH-12FRH8535N	RH-20FRH10035N
R. accuracy (mm)	± 0.02	± 0.02	± 0.02	± 0.02	± 0.02	± 0.02
Load capatity (kg)	1	3	3	6	12	20
Reach (mm)	550	700	550	550	850	1000
IP class	IP20/(IP65)	IP20/(IP65)	IP20	IP54/(IP65)	IP54/(IP65)	IP54/(IP65)
ISO 14644-1 (With/without bellows)	—	—	—	5/7	5/-	5/7
Clean Room Design	ISO class 5	ISO class 5	ISO class 3	ISO class 3	ISO class 3	ISO class 3
Special version	—	ESD	ESD	ESD	ESD	ESD
Controller	**CR800-D/CR800-R + R16RTCPU**					

Model	RH-3CRH	RH-6CRH	RH-10CRH	RH-20CRH
R. accuracy (mm)	± 0.01	± 0.02		
Load capatity (kg)	3	6	10	20
Reach (mm)	400	600/700	600/700/800	850/1000
IP class	IP20	IP20	IP20	IP20
ISO 14644-1 (full load)	—	—	—	—
Clean Room Design	—	—	—	—
Special version	—	—	—	—
Controller	**CR800-D**			

Mitsubishi Electric robot for collaborative applications "ASSISTA"

Simpler and easier

- Robots work with people and work next to people in busy workplaces.
- Simpler, easier and more flexible.
- It is a robot for you that changes the image of the robot.

Easy control

- The operating buttons on the robot arm provide you with easy control for ASSISTA and the teaching pendant for programming and teaching is no longer needed.
- The LED on the robot arm display the status of the robot.

Easy programming

- You can create programs visually using intuitive operations with RT VisualBox.
- "Visual programming" – This software allows operators to simply program this robot with a "train by demonstration" programming interface. This allows them to move the robot arm position and set waypoints easily.

Easy connecting

- ASSISTA offers a wide variety of components-Grippers, Fingers, Vision and other peripherals-developed by our e-F@ctory Alliance partners. These tools can easily be setup and configured for your application.
- ASSISTA can also be configured to move freely as as part of an AGV/AMR or as a mobile robot.

(AGV:Automated Guided Vehicle, AMR:Autonomous Mobile Robot)

Grip with ASSISTA

Simply connect grippers to robot arm

The ASSISTA set-up wizard provides operators with an easier more intuitive methodology for gripper configurations.

Recommanded electric-powered gripper:

- Co-act EGP-C40-N-N-ASSISTA (SCHUNK)
- HRC-03-099455 (ZIMMER)
- KIT-ASSISTA-G (GIMATIC)
- ROB-SET ECBPM ASSISTA (SCHMALZ)

View with ASSISTA

ASSISTA and the camera capture the target using the "RT VisualBox" auto-focus function.

"RT VisualBox" proprietary engineering tool

The vision camera focus adjustment and work registration can be configured simply by touching the screen. This means that you can use it even without special robot knowledge.

Vision sensor in-sight

The high-performance camera identifies the target and fixes position at high speed. Its compact size makes it ideal for attaching to the ASSISTA robot hand. This wire-saving type is equipped with PoE.

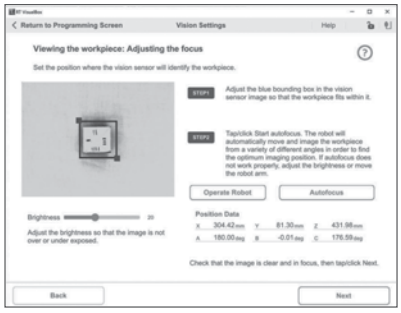

Screenshot RT VisualBox

Model designation

RV-7FRLM

RV-5AS

RV-8CRL

Vertical articulated robots (RV)

RV-□FR□M-□-□□□

- S□□: special type, SH□□: internal wiring, ESD: electrostatic discharge, SN: Without machine cable, S200: NRTL and CSA certification
- Controller type D: CR800-D, R:CR800-R
- Env. spec.: Blank: standard, C: cleanroom spec., M: oil mist (IP67)
- Arm length: Blank: standard arm, L: long arm, LL: super long arm
- FR: FR series
- Max. payload (2: 2 kg, 4: 4 kg, 7: 7 kg, 13: 13 kg, 20: 20 kg, 35: 35 kg, 50: 50 kg, 80: 80 kg)
- RV: vertical articulated robots

RV-□AS-D-□□□

- S□□: special type (-S01: Food-grate H1 grease in all gears and joints)
- Controller type D: CR800-D
- AS: ASSISTA series
- Max. payload (5: 5 kg)
- RV: vertical articulated robots

RV-□CRL-D-□□□

- S□□: special type
- Controller type D: CR800-D
- Arm length: L: long arm
- CR: CR series
- Max. payload (8: 8 kg, 12: 12kg)
- RV: vertical articulated robots

Model designation

RH-1FRHR5515

RH-6FRH5520N

RH-3CRH4018

Horizontal articulated robots (RH)

RH-□FRH□□N-□-□□□

- S□□: special type, ESD: electrostatic discharge, SN: Without machine cable
- Controller type: D: CR800-D, R:CR800-R
- Env. spec.: Blank: standard, C: cleanroom spec., M: oil mist (IP67), N: IP54 and H1 grease
- Stroke length: 12: 120 mm, 15: 150 mm, 20: 200 mm, 34: 340 mm, 35: 350 mm, 45: 450 mm
- Arm length: 35: 350 mm, 45: 450 mm, 55: 550 mm, 70: 700 mm, 85: 850 mm, 100: 1000 mm
- FRH: FR series, FRHR: FR series ceiling type
- Max. payload (1: 1 kg, 3: 3 kg, 6: 6 kg, 12: 12 kg, 20: 20 kg)
- RH: horizontal articulated robots

RH-□CRH□□□□-D-□□□

- S□□: special type, -S22: Bellow installed
- Controller type D: CR800-D
- Stroke length: 18: 180 mm, 20: 200 mm, 30: 300mm, 42: 420mm
- Arm length: 40: 400 mm, 60: 600 mm, 70: 700 mm, 80: 800mm, 85: 850mm, 100: 1000mm
- CRH: CRH series
- Max. payload (3: 3 kg, 6: 6 kg, 10: 10kg, 20: 20kg)
- RH: horizontal articulated robots

Advanced features maximizing FR series performance, further improving accuracy, efficiency, and quality

MELFA FR series has evolved further, promoting "next-generation manufacturing".
It is now equipped with Mitsubishi Electric's unique algorithm that further boosts accuracy, efficiency, and quality in control. Moreover, it supports a wider range of applications, flexibly meeting the need of each customer's manufacturing process.
MELFA FR series contributes to realization of next-generation manufacturing with higher productivity and quality.

MELFA FR series FR PLUS

MELFA FR series FR PLUS offers reduced positioning time and improved trajectory accuracy with the "MELFA High Drive function" and supports a wider range of applications with "expanded force sensor lineup". With these features, MELFA FR series FR PLUS flexibly meets the need of each customer's manufacturing processes and contributes to high productivity and quality. FR Plus robot models are fully compatible with FR series models as the FR Plus functions need to be activated.

MELFA High Drive function

Reduced positioning time

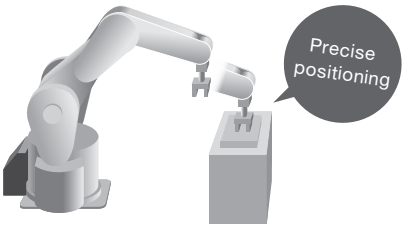

The vibrations that occur during positioning can be suppressed by using Mitsubishi Electric's unique vibration control algorithm. This enables a 30 % reduction of the positioning settling time, improving the cycle time. The improved cycle time leads to improved productivity.

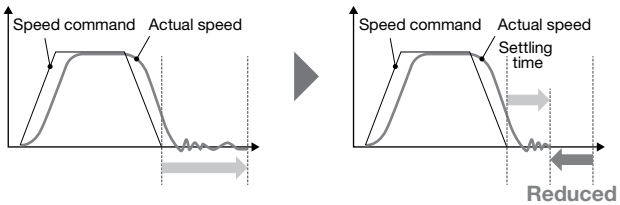

MELFA High Drive OFF | **MELFA High Drive ON**

High-accuracy trajectory control

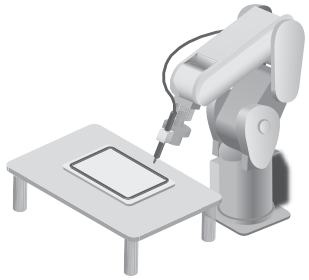

The trajectory accuracy is improved with trajectory compensation control. Setup adjustment has become easier since the trajectory fluctuation due to the speed and position less occurs. Furthermore, this function improves work quality, such as sealing process.

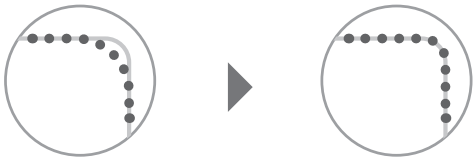

Trajectory error occurs in accordance with the speed.

High trajectory accuracy is achieved regardless of the speed.

MELFA High Drive OFF | **MELFA High Drive ON**

Check the video that introduces the Mitsubishi Electric "vibration suppression" that realizes the MELFA High Drive function.

Shortened takt times

Improved control performance

Produced the fastest operating performance in its class using high-performance motors and unique driver control technology developed by Mitsubishi Electric.

- Enabled high torque output at high rotational speed, shortening acceleration/deceleration time
- Shortened positioning time for improved device throughput
- Continuous operability improved

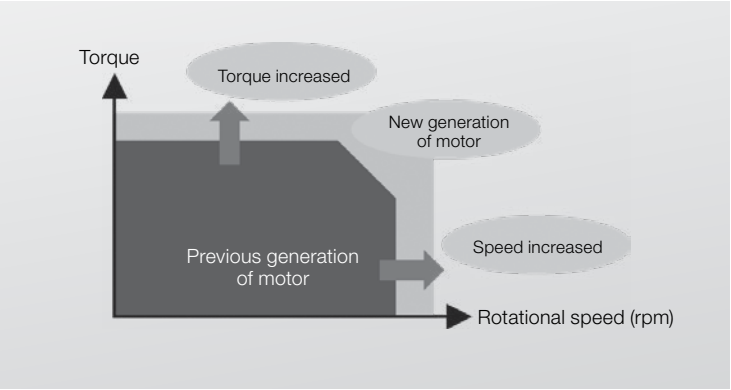

Tooling performance

Internal routing of hand wiring and signal cable

- Internal routing of cables and air hoses
- No interference with cables around devices
- Reduced risk of wiring disconnection
- Optional RV robot models are available with integrated internal wiring and hoses routed up to the hand (J6 axis) (-SH□□).

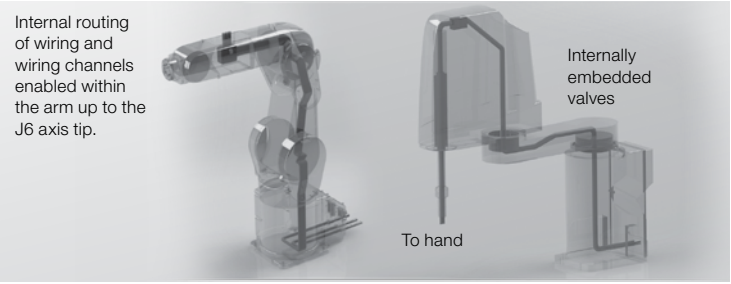

Flexibility with internal Ethernet cable tools

Internal installation of wiring and piping for connecting to vision sensors enabled.

- Hand: 8 input points/8 output points
- Ethernet cable for the vision sensor
- Additional cables to control vision systems or other sensors

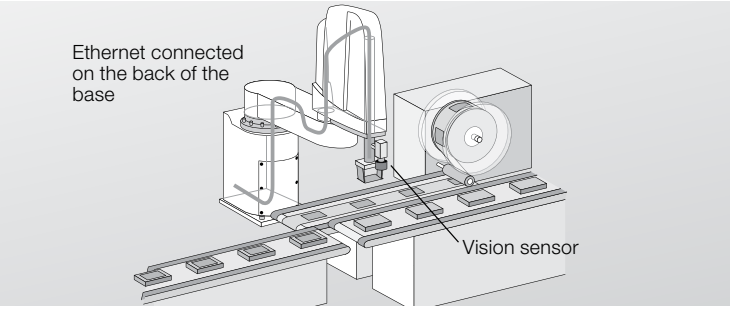

Full use of installation space

Expanded pivotal operating range

- Improved flexibility for robot layout design
- More effective use of access space around the entire perimeter
- Shortened movement distances, enabling takt times to be shortened

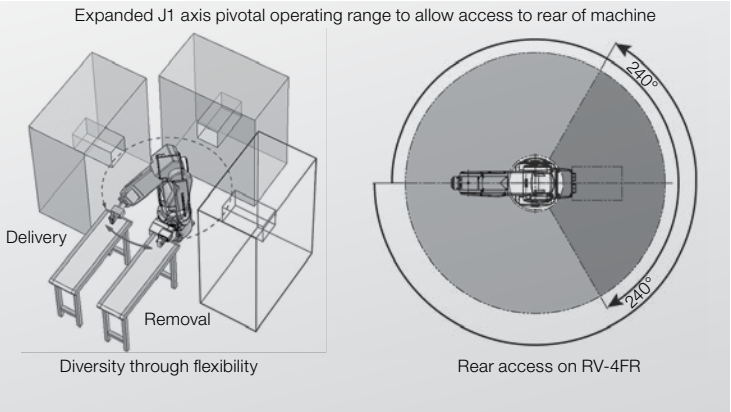

User friendliness

Simple automatic operation from the teaching box

- R86TB offers improved operability with an easy to operate and intuitive user interface
- Equipped with the major functions of RT ToolBox3 such as program support functions, parameter and program screens
- 3D Monitor with display layout allows visualization of robot movements and providing a comprehensive view of the operation
- Early and easy troubleshooting with oscillograph, various monitor and analysis screens

Enables automatic operation of servo motor on/off, startup and shutdown, reset, program selection, and other operations.

HMI backup/restore functions (Supported on GT14, GT15, GT16, GT21, GT23, GT25 and GT27)

Robot data on the GOT can be backed up to and restored from a CF-/SD-card or USB memory stick. Due to the direct Ethernet connection a PC is not required

- This helps prevent data from being lost due to the empty battery/battery or robot malfunction.
- Data can be saved after periodic maintenance tasks are performed or when unexpected errors occur. Dramatically improves serviceability

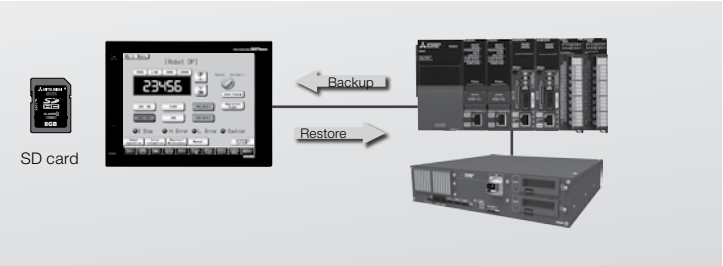

Maintenance (log function)

Information before and after errors occur (state changes, I/O, external system variables, etc.) and program run states can automatically be transferred to an FTP server as log data or saved on an SD card. Operation logs can also be downloaded, enabling efficient analysis of error causes.

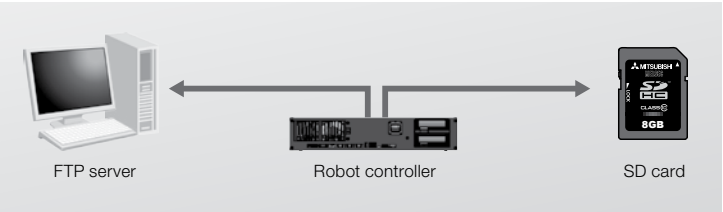

Easier robot information management

Memory is included in the robot body and used to store robot-specific information. This makes it easy to switch robot controllers.

Information can also be collected without visiting the workplace, simplifying the formulation of maintenance plans.

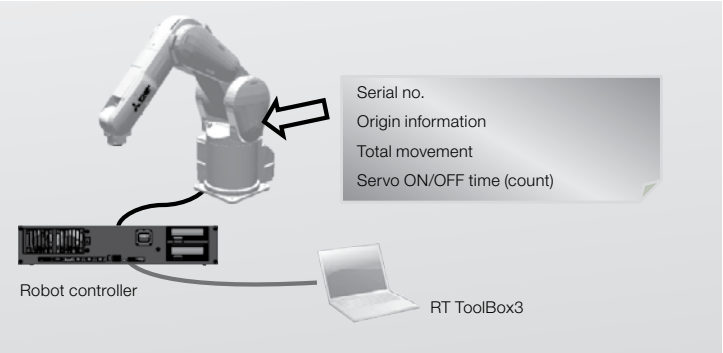

High accuracy

Active gain control

- Optimal motor control tuning settings in real-time based on robot operating position, posture and load conditions
- Improved palletization accuracy
- Improved trajectory accuracy
- Faster positioning without overshooting

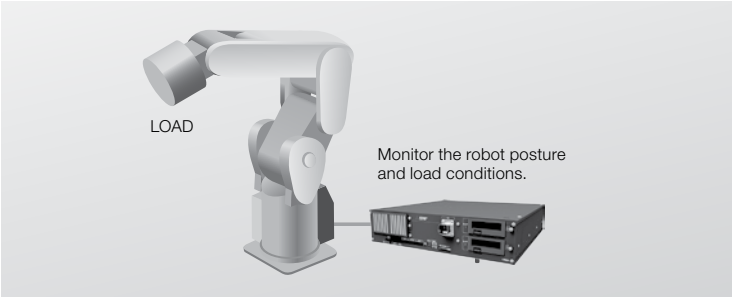

Simplified tool length setting

Tool settings for the tool coordinate system can be set by attaching the tool and using three to eight of the same teaching points.

- Eliminates errors introduced when the tool was made
- Higher precision
- Saving time, since measuring the tool is not necessary

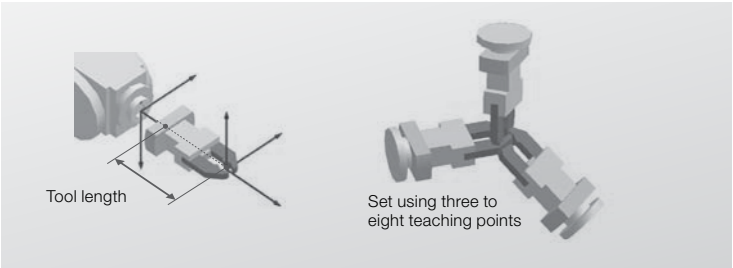

Adaptation to operation

Compliance control

This function reduces the rigidity of the robot arm and tracks external forces.

- Special hands and sensors are unnecessary
- Reduced tooling costs
- Shortened line stop times

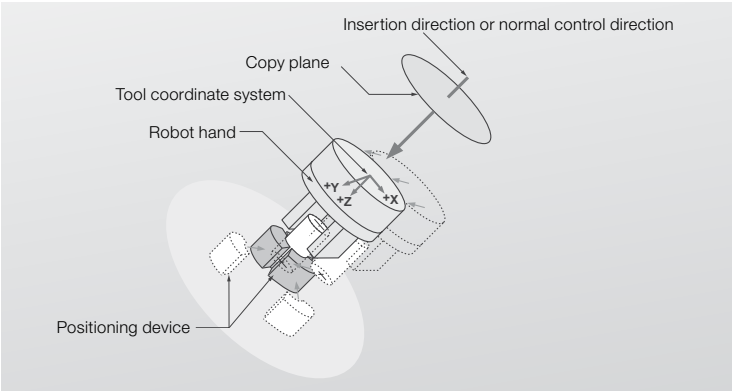

Collision detection function

This function detects if the arm collides with an obstacle while teaching or operation, and helps to reduce damaging the robot arm and tools. The detection level can be changed according to the protection targets.

The operation which should follow after the collision detection can be programmed to suit to the application, for example stop immediatly and show error or retract and show then the error.

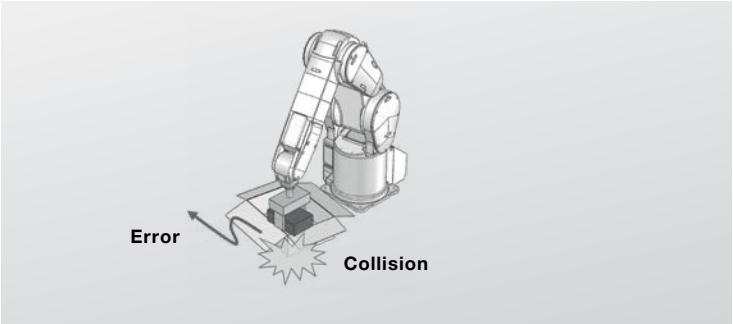

Connection to peripheral devices

Network vision sensor

The robot and camera can be easily simultaneously calibrated through a simple process using vision sensor setting tools.

- Simple connection between the robot and camera using Ethernet
- Simple control using vision control commands in the robot programs
- Shortened takt times
- Reduced system costs

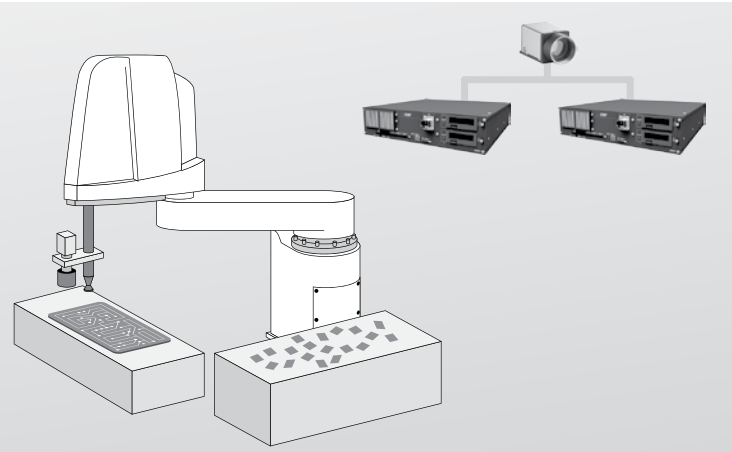

Tracking

Transport, alignment, and installation work, etc. can be performed while robots are tracked with the workpiece on the conveyor without stopping the conveyor.

- Higher throughput of components
- Easy programm creation (MELFA BASIC V/VI)
- No need for an additional positioning device
- Prediction of workpiece position for better tact times
- Circular tracking available

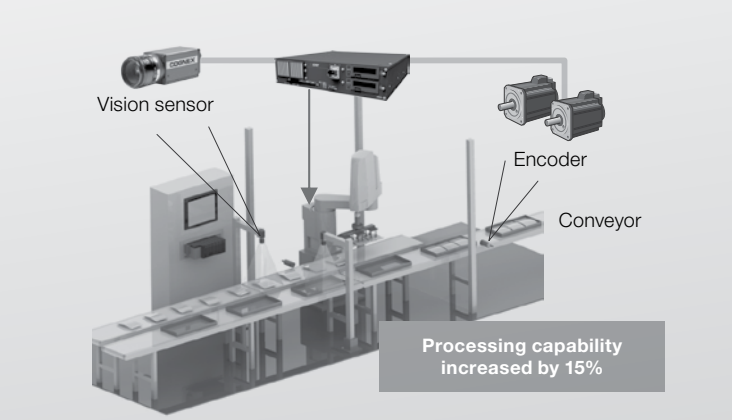

Can be used with multiple conveyors at the same time (up to 8 conveyors)

Additional axis function

The layout can be set up to include the robot traveling axis and turntable as well as user machines separate from the robot such as loaders and positioning devices.

- Up to 8 additional axes can be controlled by the controller
- No additional motion control hardware necessary
- Rotary and linear servomotors are supported
- Plug-and-play compatibility with the MELSERVO MR-J4-B and J5-B servos
- Two axes can be contolled simultaneous with the robot
- No need of special programming knowledge, because robot software is used

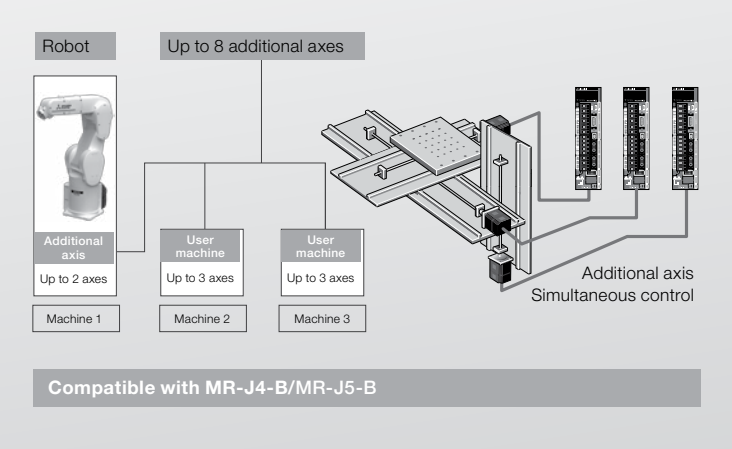

CC-Link IE Field Network Basic function

FR series robot controller supports the slave stations of “CC-Link IE Field Network Basic” as a built-in function.

- CC-Link IE Field Network Basic compatible products and Ethernet compatible products can be connected on the same Ethernet communications line
- MELSEC iQ-R/iQ-F/Q/L series PLC CPU and the MELFA FR series robot controller have built-in Ethernet as standard, so no dedicated option is required
- enabling a highly-flexible and cost-effective system

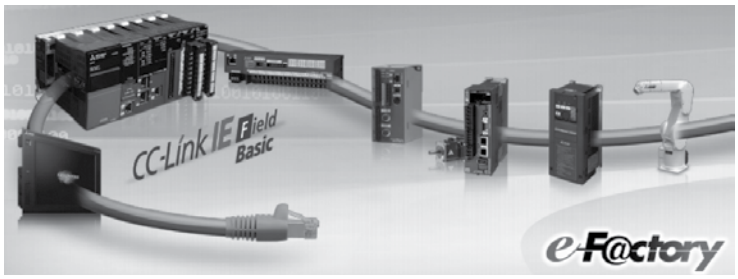

Collision avoidance (R type controllers only)

The robot is stopped, even before collisions can occur. This is possible due to the fast position control, that ist implemented in the iQ Platform as a standard feature.

- Robots can operate together in a confine space without interfereing with each other
- Reduces the number of recovery manhours required after a collision
- Already represented in the simulation of the RT ToolBox3
- Can be used in Teach-Mode already

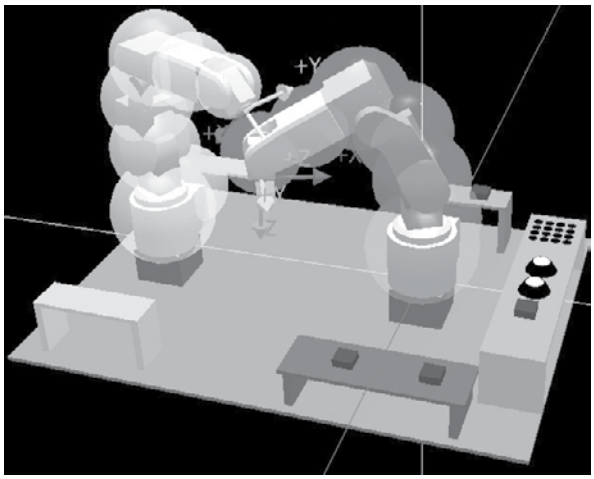

Possible collisions with other robots are avoided.

Coordinated control (R type controllers only)

Enables coordinated control between multiple robots through CPU connection between the robots.

- Easy to operate by predefined default function
- Enables transport of lengthy or heavy objects using small-sized robots
- Programming as already known by using standard commands

Enables installation work to be completed while gripper positions between robots are maintained.

Intelligent technology (integrated as standard)

Force sensor

- Monitors the force applied to the robot gripper to handle processes like a human operator
- Keeps the force constant so that the workpiece can be handled without causing damage
- Complex assembly tasks achieved through techniques such as phase matching
- Force log function for checking the quality check

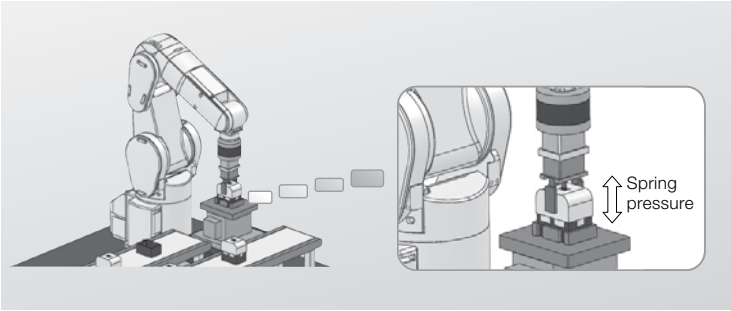

Arm temperature compensation

- Monitors temperature of motor encoders
- Improves positioning accuracy by compensating for thermal expansion in the robot arm

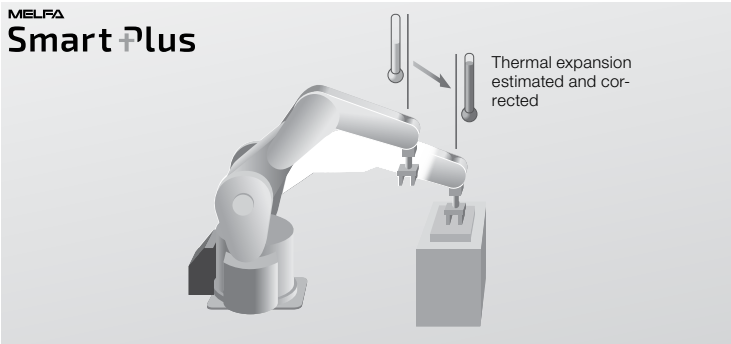

Calibration assistance

- Reduces the time for calibration during start up and improves position accuracy
- Automatically correcting the robot and camera coordinates
- Automatically correcting the robot and workpiece coordinates
- Adjust the robot location relative to other robots

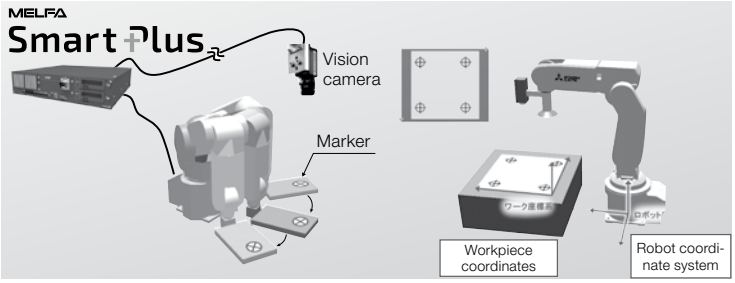

Coordinate control for additional axes

- Allows synchronized operation when a robot is installed on an additional axis (linear axis) to handle large workpieces which exceed robot's working range
- Allows synchronized operation when tracking of the robot with a workpieces on an additional axis (linear axis) is executed

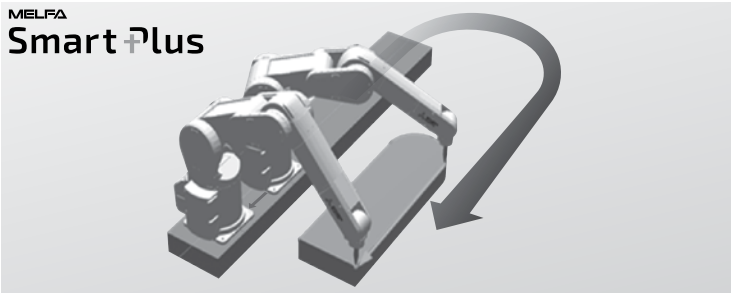

Preventative maintenance function (integrated as standard)

Consumption degree calculation function

- Identify the consumption degree of main components
  - A dynamic model and drive data are used to calculate the physical amount (force, speed, etc.) applied to each part.
  - By comparing this to the lifetime of the components, the consumption degree of each component is calculated. (Reduction gears, ball screws, belts, bearings, grease)
- Notify appropriate maintenance schedules
  - "Warning" and "general-purpose signal output" can be issued when maintenance is required.
- Identification of the appropriate maintenance schedule according to robot operating conditions
- This enables efficient, appropriate maintenance support

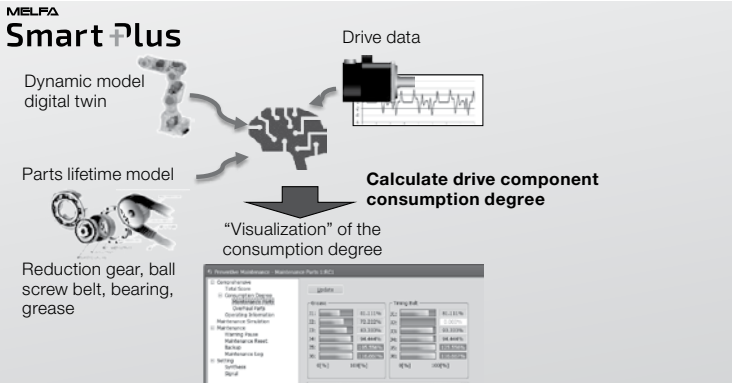

Maintenance simulation

- Estimate the maintenance schedule according to operation
  - Estimates the parts replacement time or the recommended maintenance time when a specific motion pattern (robot program) is repeated using simulations on RT ToolBox3
- Support for machine-friendly operation verification
  - By the offline simulation, the robot lifetime can be estimated
  - Operations can be verified by changing the operating program in consideration of tact time and lifetime
- Predict the robot lifetime and annual maintenance cost estimation already during the design stage
- Modify the robot operation to extend the life cycle

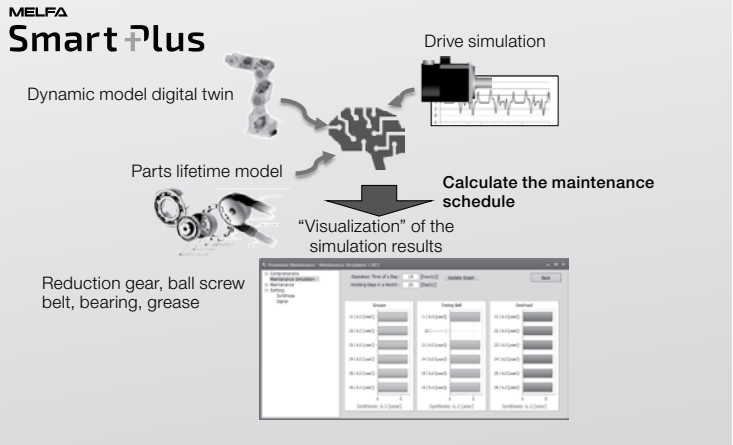

Integration in a maintenance system

- Support for forming a various maintenance system
  - Interaction with upper-level devices
  - Maintenance information is held as status variables
  - In addition to using maintenance data in the robot program, it is possible to obtain data from upper-level devices via communication middleware.
- Centralized management of robot maintenance data on an upper-level system

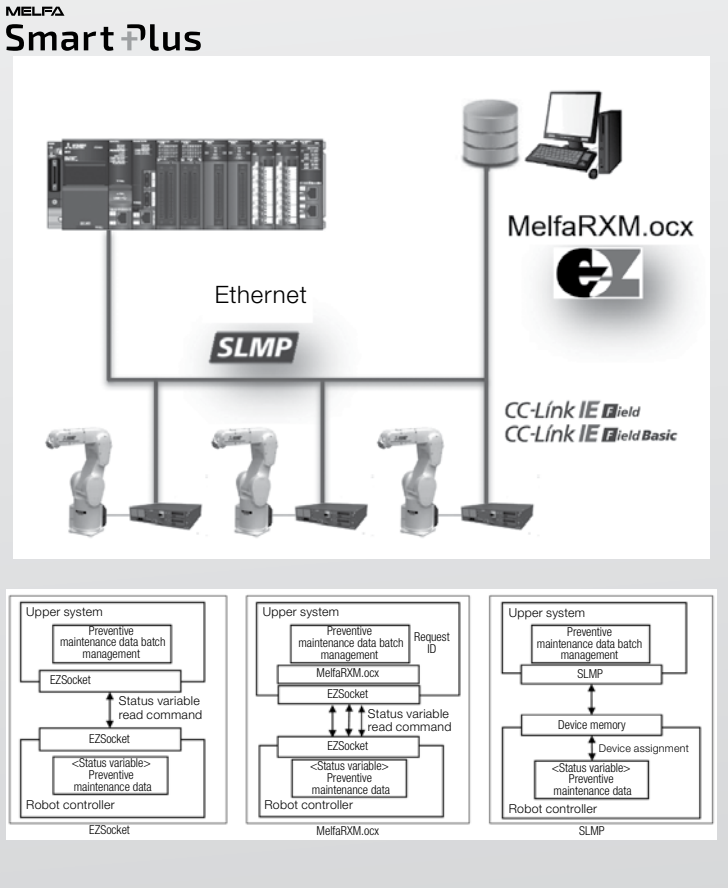

Predictive maintenance function (optional feature)

Abnormality detection function

- This function detects abnormalities or deterioration of robot reduction gear components early
- Current score of the reduction gear including reduction gears, encoder data abnormality, and encoder communication abnormality
- When the score exceeds the detection level, the reduction gear is assumed to be abnormal and an error (warning) occurs or that effect is notified by the dedicated output signal.
- The current status is displayed as the predictive maintenance message
- This function can be activated by installing either the MELFA Smart Plus Card (2F-D521), or by using the iQ Care MELFA Support SD Card in the robot controller.

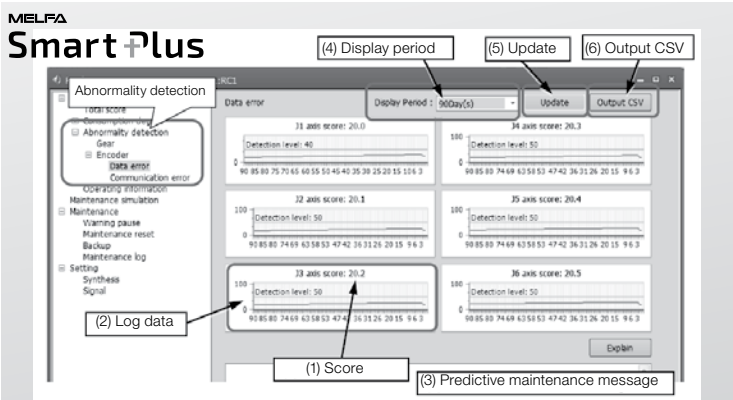

▪ MELFA SafePlus features

"MELFA SafePlus" safety technology for the FR series robot controllers

- Supported Safety functions: STO (Safe Torque Off), SS1 (Safe Stop 1), SS2 (Safe Stop 2), SOS (Safe Operation Stop), SLS (Safely-Limited Speed), SLP (Safely-Limited Position)
- All functions follow the safety standards EN ISO 10218-1 (Industrial robots), EN ISO 13849-1 (Safety of machinery), EN 62061/ IEC 61508 (Functional safety) and EN 61800-5-2 (Safety function drive).

Reduced speed control (safe limited speed, SLS)

Function to control the robot speed with safe limted speed to secure operator's safety when signaled via safety input signals. Up to four different zones with different limited speed can be activated. Operator can be interactive while the robot is running in automatic mode, but with safe low speed.

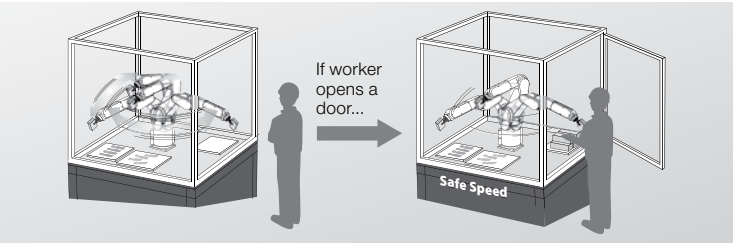

Limited range control (safe limited position, SLP)

Function to control the robot movement range and to ensure that the robot does not exceed the set limit activated by the safety input signal. This function monitors the robot arm. If the robot or the attached hand exceeds any set plane, the robot will stop immediately or before it.

Independent areas can be defined for different safety situations.

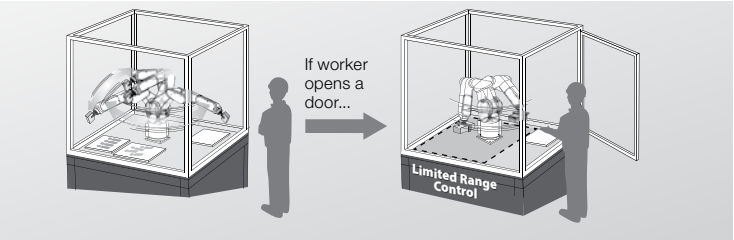

Safety logic editing

Expands the dual safety channels to 8 inputs and 4 outputs. Logic for each safe I/O can be edited and in combination with the postion monitoring function a safe system can be constructed without using a Safety PLC.

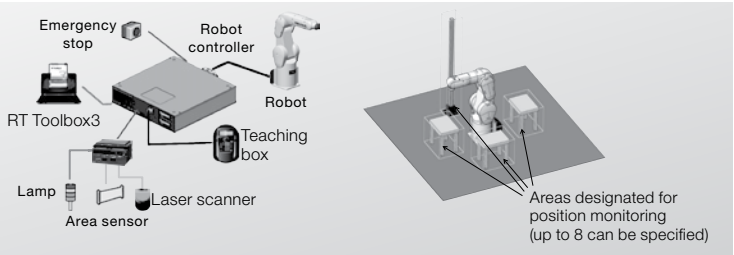

Mitsubishi Electric offers even more products with security features such as modular and compact PLCs, inverters and servo amplifiers. Refer to the Automation Book for detailed information.

Special functions with GOT terminals and the iQ Platform

Shared memory expansion

Enhanced efficiency of monitoring and maintenance operations onsite using a single GOT (display device) as the Human Machine Interface (HMI).

- Enables the robot to be controlled from the GOT even without a teaching box
- Current robot position data, error information, and other items can be displayed easily on the GOT
- Connection with a single Ethernet cable and direct access to the control unit
- 8192 input an output points can be exchanged via Ethernet connection

Operation panel screen

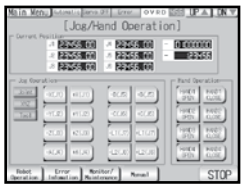
Jog/hand operation screen

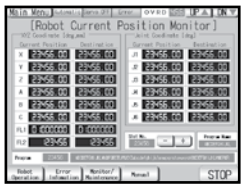
Current position monitor screen

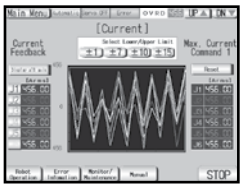
Current value and load factor monitor screen

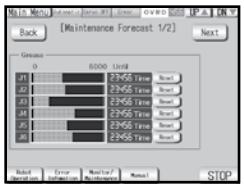
Maintenance forecast screen

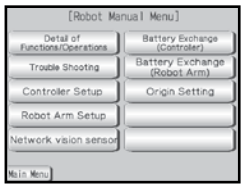
Manual/video display menu

Direct execution function for programmable controllers

Robots can be controlled easily using programmable controller language.

- Control of system operation using an single programmable controller
- Direct changing of system specifications via programmable controller
- Direct handling of troubleshhooting
- Simple movement to teached positions by PLC program
- No need to use any robot programs

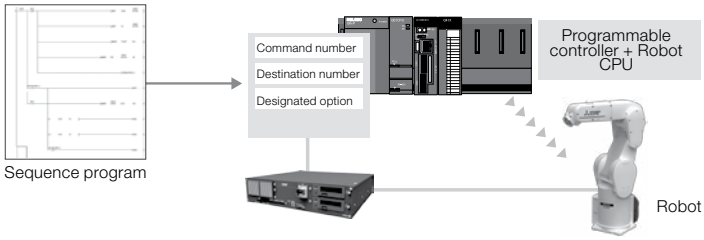

	Details
Operation	Joint-interpolated motion Linear-interpolated motion
Motion control	Designated override Designated acceleration/deceleration settings Designated speed Tool settings Designated auxiliary motion Opening/closing of hand

Integrated cable and tube routing to the tool flange on vertical articulated robots

Internal wiring and tubing routing to the wrist is available on selected models, enabling a clean and compact installation.

- Internal cable routing eliminates cable interference around surrounding equipment.
- Wiring and tubes can be routed to the J6 axis tip inside the arm
- Various models are available with the internal cabling specification (-SHxx), as shown in the table below:

Devices that can be mounted	Model				
	-SH01	-SH02	-SH03	-SH04	-SH05
Air Ø4	○	-	-	○	○
Gripper input 8 points	○	○	-	○	○
Vision sensor	-	○	○	-	○
Force sensor	-	○	○	○	-
Electric gripper	-		○	-	-

Dedicated robots for Pharma and Food & Beverage applications

These robot models are highly resistant to aggressive chemical cleaning, featuring FDA-compliant chemical-resistant coating and advanced sealing, making them ideal for food and pharmaceutical production.

They can operate in environments sterilized with hydrogen peroxide gas and withstand cleaning with hydrogen peroxide water, ethanol, and isopropyl alcohol.

Additionally, they use NSF H1 certified grease in the joints, ensuring safety and reliability in food and beverage applications.

Corrosion resistance has been enhanced by using the stainless-steel tool flange

Special outer bolts of the robot surface are made of stainless steel to resist against corrosion and prevents accumulation of liquid

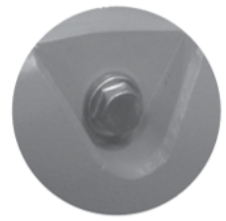

	Models with Chemical-resistant coating	Models with H1 grease for food machinery
H1 grease is applied to the seals	RV-4FR(L)M-D-S107 RV-7FR(L)M-D-S107 RH-6FRHxxyyM-D-S48	RV-4FR(L)M-D-S50 RV-7FR(L)M-D-S50 RV-13FR(L)M-D-S50 RV-20RM-D-S50 RH-6FRHxxyyM-D-S49 RH-12FRHxxyyM-D-S49 RH-20FRHxxyyM-D-S49
Stainless materials		
Special hexagon flange bolts		
Chemical-resistant coating and seals		-
Chemical resistance bellow		-

Industrial robots RV-2FR(B)/RV-2FRL(B)

RV-2FR(B)

The vertical articulated robots RV-2FR(B)/RV-2FRL(B)

The compact and light RV-2FR(B)/RV-2FRL(B) can be seamless integrated into different automation systems. Flexibility and the wide range of motion permits acting in applications with limited space, like mounting, assembling, palletising, sorting or bonding. Even the basic model is available with a fully equipped standard controller or as PLC robot with integration onto the iQ Platform.

Highlights:

- 2 different arm length with 504 mm and 649 mm
- Only 19/21 kg weight and extremely compact
- Highest flexibility
- Floor, wall and ceiling installation possible
- Position repeatability of ±0.02 mm

* FR Plus compatible and MELFA High Drive function can be activated

Characteristics/Functions			Specifications			
			RV-2FR-D/ RV-2FR-R	RV-2FRB-D-S25/ RV-2FRB-R-S25	RV-2FRL-D-S25/ RV-2FRL-R-S25	RV-2FRLB-D-S25/ RV-2FRLB-R-S25
Degrees of freedom (no. of axes)			6			
Installation posture			Floor, ceiling or wall mounting possible			
Structure			Vertical articulated arm			
Drive system			AC servo axes J1, J4, J6: no brake	AC servo (brakes on all axes)	AC servo axes J1, J4, J6: no brake	AC servo (brakes on all axes)
Position detection method			Absolute encoder			
Payload capacity	rated	kg	2			
	maximum		3			
Arm reachable radius (to the center point of the J5 axis)		mm	504		649	
Operating range	waist (J1)	degree	480 (-240–240)			
	shoulder (J2)		240 (-120–120)		237 (-117–120)	
	elbow (J3)		160 (0–160)			
	wrist twist (J4)		400 (-200–200)			
	wrist pitch (J5)		240 (-120–120)			
	wrist roll (J6)		720 (-360–360)			
Maximum speed	waist (J1)	degree/s	300		225	
	shoulder (J2)		150		105	
	elbow (J3)		300		165	
	wrist twist (J4)		450		412	
	wrist pitch (J5)		450			
	wrist roll (J6)		720			
Maximum composite speed		mm/s	4955		4200	
Cycle time (25x300x25 mm with 1 kg load)		sec	0.6		0.7	
Position repeatability		mm	±0.02			
Ambient temperature		°C	0–40			
Weight		kg	19		21	
Tolerable moment	wrist twist (J4)	Nm	4.17			
	wrist pitch (J5)		4.17			
	wrist roll (J6)		2.45			
Tolerable inertia	wrist twist (J4)	kgm²	0.18 (0.27)			
	wrist pitch (J5)		0.18 (0.27)			
	wrist roll (J6)		0.04 (0.1)			
Tool wiring			Hand input 4 points/hand output 4 points			
Tool pneumatic pipes			Ø 4x4 (from the base level to the gripper hand area)			
Supply pneumatic pressure		MPa	0.5 ±10 %			
Gripper flange			ISO 9409-1-31.5			
Protection rating			IP30			
Robot controller			CR860-D/CR800-R + R16RTCPU			
Order information		Art. no.	313052/ 314029	313053/ 314030	313054/ 314031	313085/ 314032

Additional models without standard 5m machine cable are available.

■ Robot arms RV-2FR(L)(B)

RV-2FR(B)

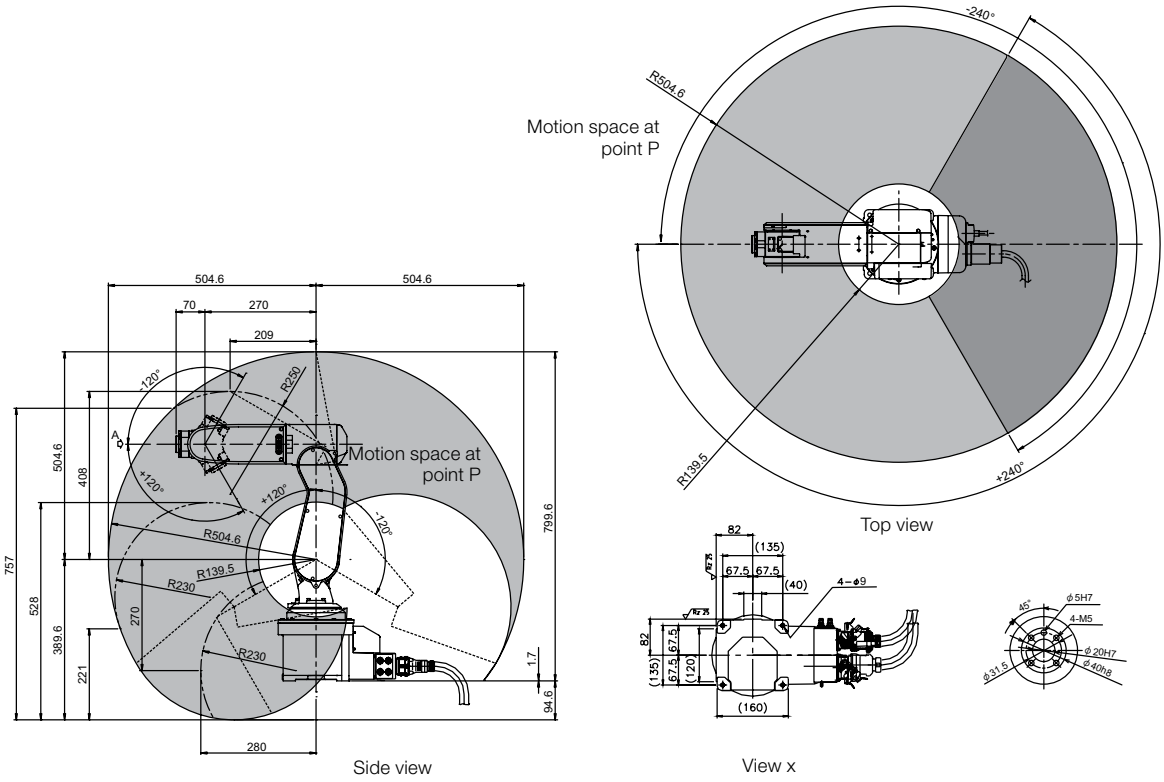

Dimensions: mm

RV-2FRL(B)

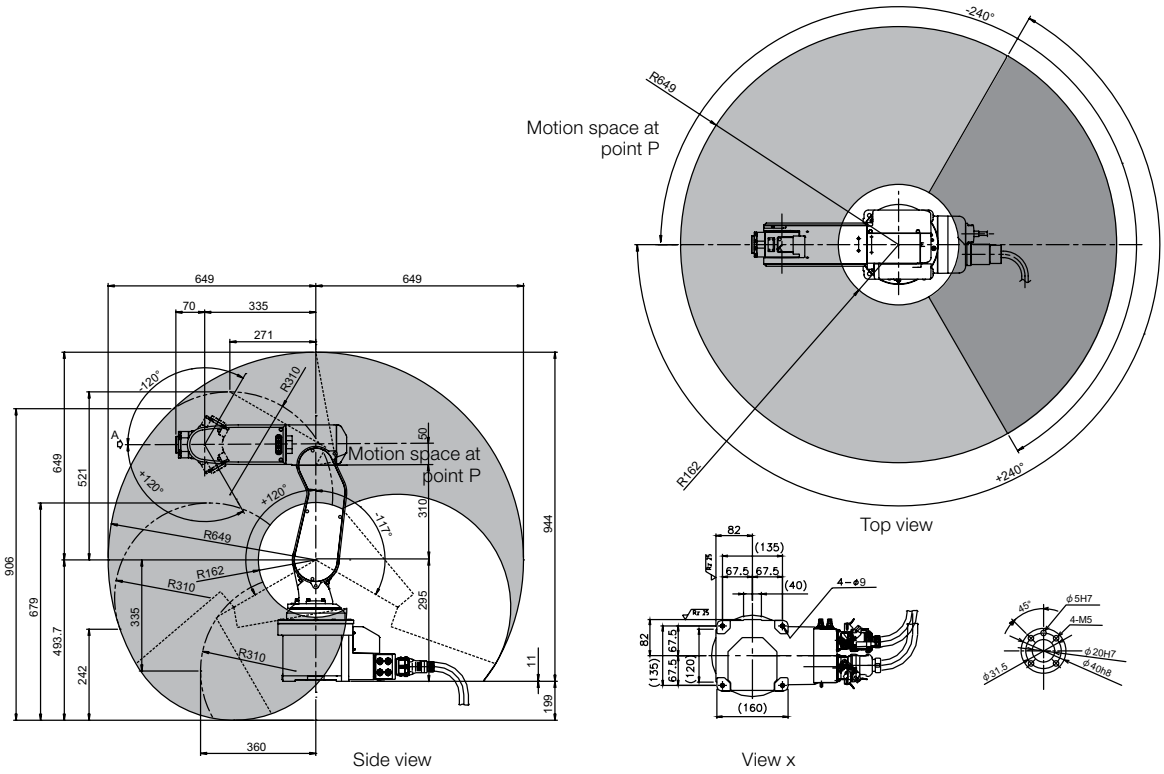

Dimensions: mm

Industrial robots RV-4FRLM

RV-4FRLM

The vertical articulated robots RV-4FRLM

The robots of the RV-4 FR series are designed for easy integration into existing work cells or innovative and compact applications. Features such as the direct control over local I/Os allows the robot to interact directly with sensors and actuators, speeding up and simplifying system building. A new innovative design allows a maximum of flexibility, so that the robot can expand his workspace to work faster and more flexible.

Highlights:

- Slim arm design
- IP67 protection
- Internal routed cables and air hoses
- Extended maintenance intervals
- 4 kg rated and maximal payload

* FR Plus compatible and MELFA High Drive function can be activated

Characteristics/Functions			Specifications	
			RV-4FRLM-D	RV-4FRLM-R
Degrees of freedom (no. of axes)			6	
Installation posture			Floor, ceiling or wall mounting possible (wall mounting with limitations in the J1 axis)	
Structure			Vertical articualed arm	
Drive system			AC servo (brakes on all axes)	
Position detection method			Absolute encoder	
Payload capacity	maximum	kg	4	
Arm reachable radius (to the center point of the J5 axis)		mm	649	
Operating range	waist (J1)	degree	480 (±240)	
	shoulder (J2)		240 (-120–120)	
	elbow (J3)		164 (0–164)	
	wrist twist (J4)		400 (±200)	
	wrist pitch (J5)		240 (-120–120)	
	wrist roll (J6)		720 (±360)	
Maximum speed	waist (J1)	degree/s	420	
	shoulder (J2)		336	
	elbow (J3)		250	
	wrist twist (J4)		540	
	wrist pitch (J5)		623	
	wrist roll (J6)		720	
Maximum composite speed		mm/s	9048	
Cycle time (25x300x25 mm with 1 kg load)		sec	0.36	
Position repeatability		mm	±0.02	
Ambient temperature		°C	0–40	
Weight		kg	41	
Tolerable moment	wrist twist (J4)	Nm	6.66	
	wrist pitch (J5)		6.66	
	wrist roll (J6)		3.96	
Tolerable inertia	wrist twist (J4)	kgm²	0.20	
	wrist pitch (J5)		0.20	
	wrist roll (J6)		0.10	
Tool wiring			Hand input 8 points/hand output 8 points	
Tool pneumatic pipes			Ø 6x2 for robot connection (Ø4x8 from base portion to forearm)	
Supply pneumatic pressure		MPa	0.54 (as overpressure if required)	
Gripper flange			ISO 9409-1-31.5	
Protection rating			IP67	
Robot controller			CR800-D	CR800-R + R16RTCPU

Order information	IP67 model	Art. no.	313089	314056
	IP40 model		313088	314055

Please contact your Mitsubishi Electric representative for ESD, ATEX, NRTL certified and cleanroom models.
Additional models without standard 5m machine cable are available.

■ Robot arms RV-4FRLM

RV-4FRL

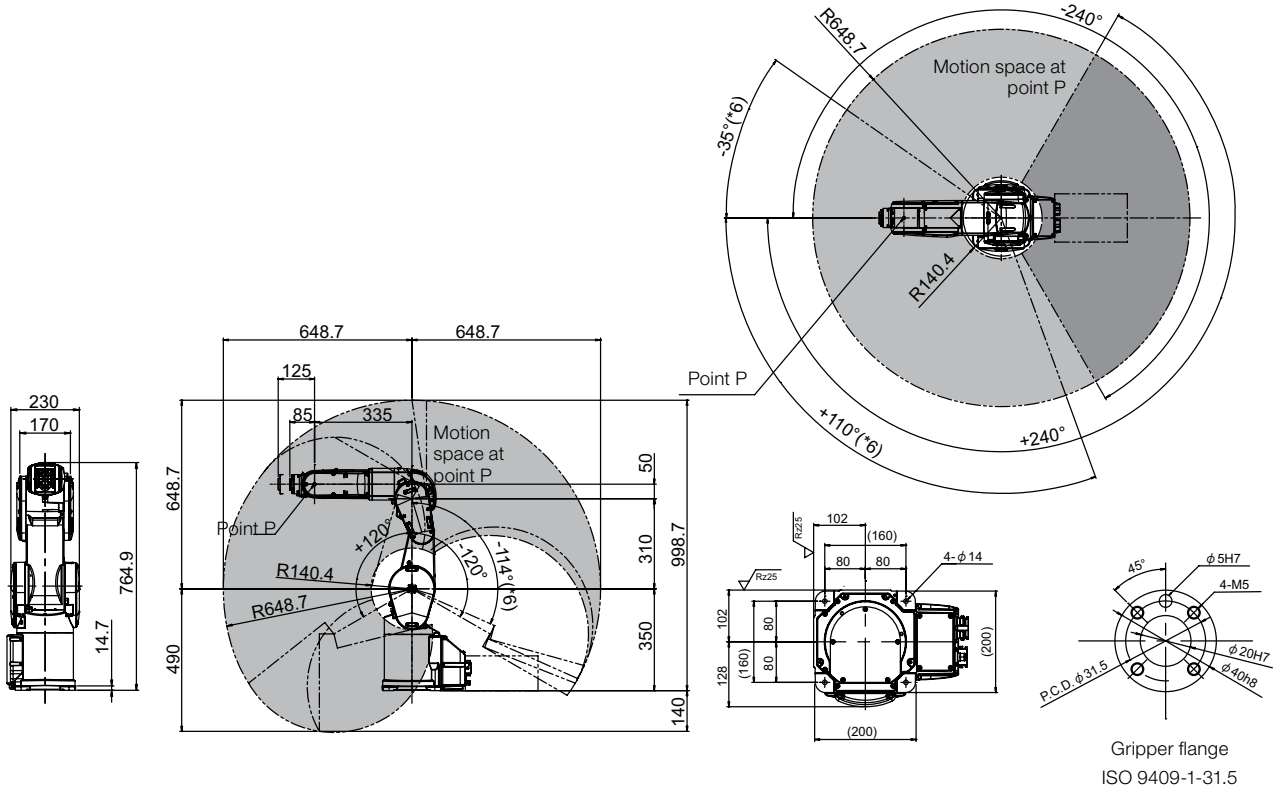

Dimensions: mm

Industrial robots RV-7FRM/7FRLM/7FRLLM

RV-7FRLM

The vertical articulated robots RV-7FRM/7FRLM/7FRLLM

The RV-7FRM with a nominal and maximum payload of 7 kg sets new benchmark standards for speed, flexibility, ease of integration and simplicity of programming. For an optimum work radius the robot is available in three versions with ranges from 713 mm to 1503 mm. Ethernet, USB, tracking, camera connection and additional axis connections are standard in all MELFA Robot Series.

Highlights:

- Cycle time of only 0.32 s (RV-7FRM) for a 12-inch cycle
- Drastically increased working range for J1 and J4 axis for a maximum working area
- Internal wiring
- IP67 protection
- Workspace radius of up to 1503 mm (RV-7FRLLM)

* FR Plus compatible and MELFA High Drive function can be activated

Characteristics/Functions			Specifications		
			RV-7FRM-D/ RV-7FRM-R	RV-7FRLM-D/ RV-7FRLM-R	RV-7FRLLM-D RV-7FRLLM-R
Degrees of freedom (no. of axes)			6		6 (super long arm)
Installation posture			Floor, ceiling or wall mounting possible (wall mounting with limitations in the J1 axis)		
Structure			Vertical articulated arm		
Drive system			AC servo (brakes on all axes)		
Position detection method			Absolute encoder		
Payload capacity	maximum	kg	7		
Arm reachable radius (to the center point of the J5 axis)		mm	713	908	1503
Operating range	waist (J1)	degree	480 (±240)		380 (±190)
	shoulder (J2)		240 (-115–125)	240 (-110–130)	240 (-90–150)
	elbow (J3)		156 (0–156)	162 (0–162)	167.5 (-10–157.5)
	wrist twist (J4)		400 (±200)		
	wrist pitch (J5)		240 (-120–120)		
	wrist roll (J6)		720 (±360)		
Maximum speed	waist (J1)	degree/s	360	288	234
	shoulder (J2)		401	321	164
	elbow (J3)		450	360	219
	wrist twist (J4)		337		375
	wrist pitch (J5)		450		
	wrist roll (J6)		720		
Maximum composite speed		mm/s	11064	10977	15300
Cycle time (25x300x25 mm with 1 kg load)		sec	0.32	0.35	0.63
Position repeatability		mm	±0.02		±0.06
Ambient temperature		°C	0–40		
Weight		kg	65	67	130
Tolerable moment	wrist twist (J4)	Nm	16.2		
	wrist pitch (J5)		16.2		
	wrist roll (J6)		6.86		
Tolerable inertia	wrist twist (J4)	kgm²	0.45		
	wrist pitch (J5)		0.45		
	wrist roll (J6)		0.10		
Tool wiring			Hand input 8 points/hand output 8 points		
Tool pneumatic pipes			Ø 6x2 for robot connection (Ø4x8 from base portion to forearm)		
Supply pneumatic pressure		MPa	0.54 (as overpressure if required)		
Gripper flange			ISO 9409-1-31.5		
Protection rating			IP67		
Robot controller			CR800-D/CR800-R + R16RTCPU		
Order information	IP67 model	Art. no.	313091/ 314058	313093/ 314060	313095/ 314062
	IP40 model		313090/ 314057	313092/ 314059	313094/ 314061

Please contact your Mitsubishi Electric representative for ESD, ATEX, NRTL certified and cleanroom models.
Additional models without standard 5m machine cable are available.

■ Robot arms RV-7FRM/7FRLM/7FRLLM

RV-7FRM

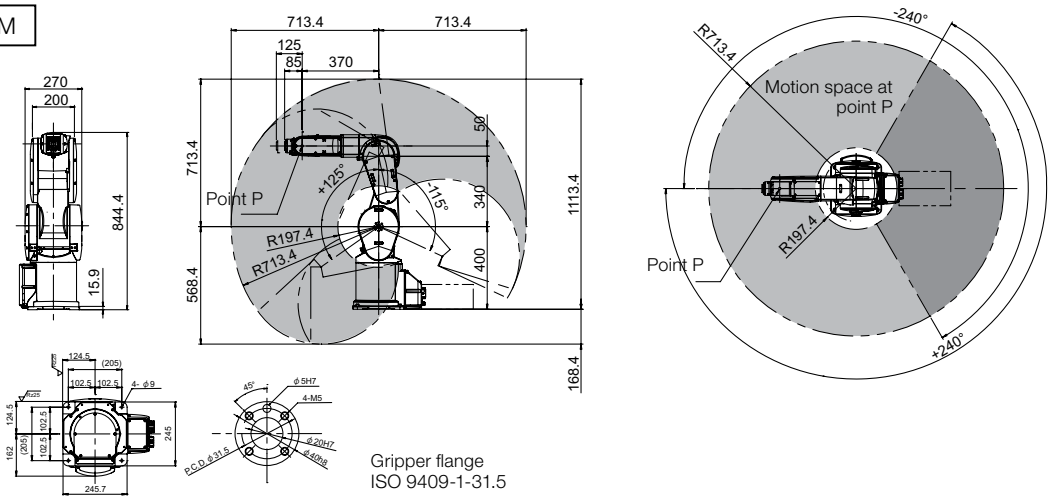

RV-7FRLM

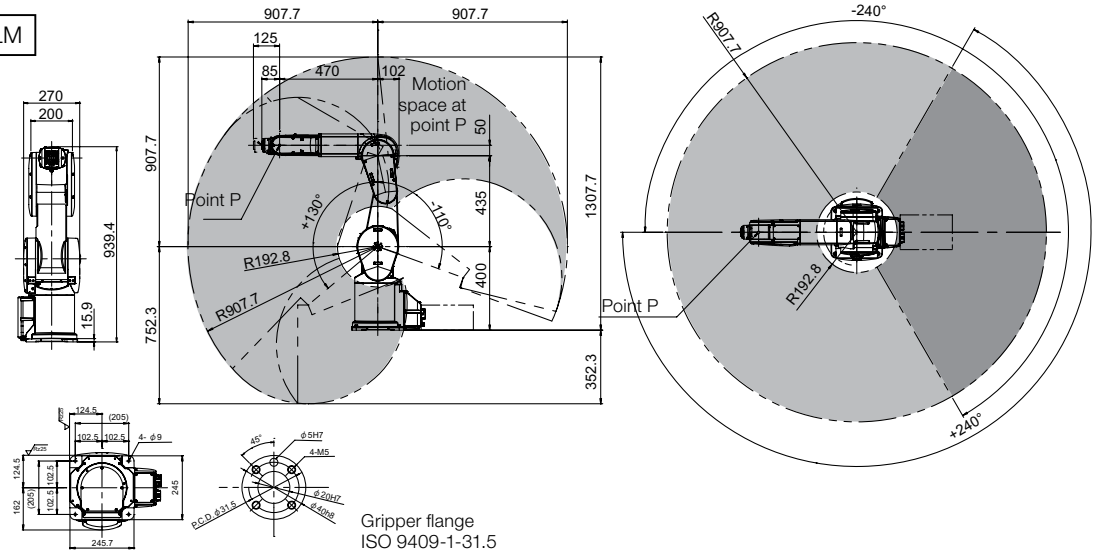

RV-7FRLLM

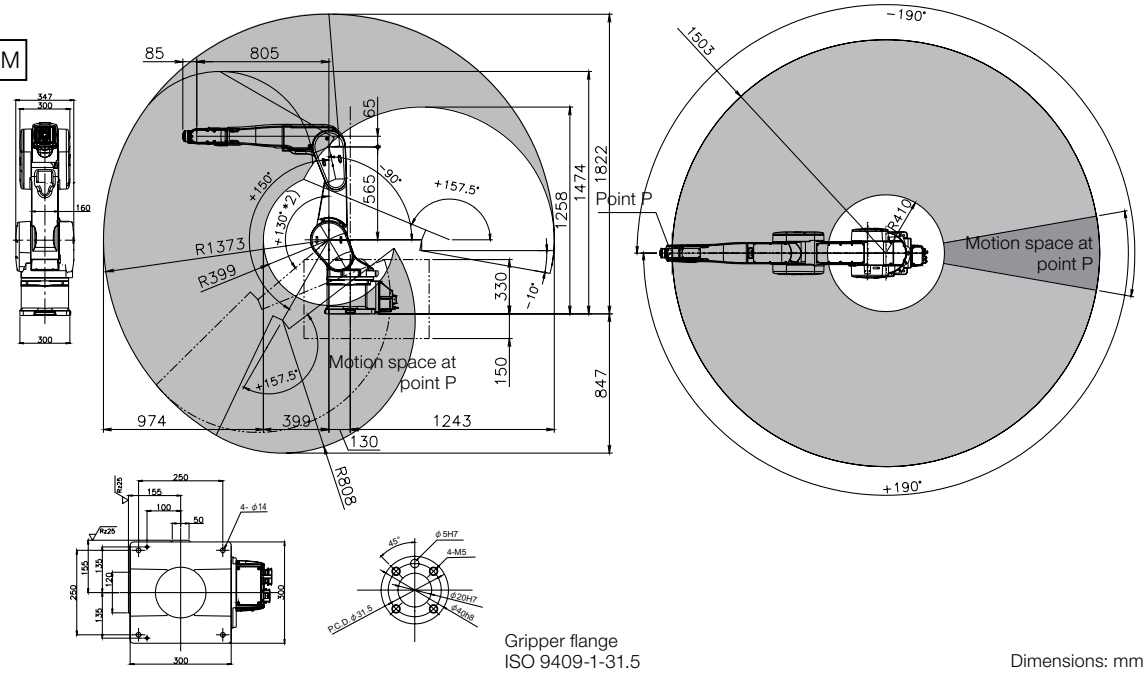

Dimensions: mm

Industrial robots RV-13FRM/RV-13FRLM/RV-20FRM /20FRLM-SC771

RV-20FRM

The vertical articulated robots RV-13FRM/RV-13FRLM/RV-20FRM

The high-performance robots RV-13 and RV-20 are especially suited for handling heavy loads. Due to the compact body and slim arm design, the robots can operate in a large work area. The anti-collision function of the iQ Platform models prevents collisions between robots which are working closely together.

Highlights:

- internal routing of cables and air hoses through the robot arm
- new gears for quiet, precise positioning and movement
- maximum payload of 20 kg (RV-20FRM)
- Protection rating IP67 standard

* FR Plus compatible and MELFA High Drive function can be activated

Characteristics/Functions			Specifications			
			RV-13FRM-D RV-13FRM-R	RV-13FRLM-D RV-13FRLM-R	RV-20FRM-D RV-20FRM-R	RV-20FRLM-D-SC771 RV-20FRLM-R-SC771
Degrees of freedom (no. of axes)			6			
Installation posture			Floor, ceiling or wall mounting possible (wall mounting with limitations in the J1 axis)			
Structure			Vertical articulated arm			
Drive system			AC servo (all axes with brakes)			
Position detection method			Absolute encoder			
Payload capacity	rated	kg	12		15	
	maximum		13		20	
Arm reachable radius (to the center point of the J5 axis)		mm	1094	1388	1094	1388
Operating range	waist (J1)	degree	380(±190)			
	shoulder (J2)		240 (-90–150)			
	elbow (J3)		167.5 (-10–157.5)			
	wrist twist (J4)		400 (±200)			
	wrist pitch (J5)		240 (-120–120)			
	wrist roll (J6)		720 (±360)			
Maximum speed	waist (J1)	degree/s	290	234	110	165
	shoulder (J2)		234	164	110	110
	elbow (J3)		312	219	110	165
	wrist twist (J4)		375		124	124
	wrist pitch (J5)		375		125	125
	wrist roll (J6)		720		360	112
Maximum composite speed		mm/s	10450	9700	4200	6600
Cycle time (25x300x25 mm with 1 kg load)		sec	0.53	0.68	0.70	-
Position repeatability		mm	±0.05			
Ambient temperature		°C	0–40			
Weight		kg	120	130	120	130
Tolerable moment	wrist twist (J4)	Nm	19.3		49.0	
	wrist pitch (J5)		19.3		49.0	
	wrist roll (J6)		11			
Tolerable inertia	wrist twist (J4)	kgm²	0.47		1.40	
	wrist pitch (J5)		0.47		1.40	
	wrist roll (J6)		0.14			0.86
Tool wiring			Hand input 8 points/hand output 8 points			
Tool pneumatic pipes			Primary: Ø 6x2, secondary: Ø 6x8			
Supply pneumatic pressure		MPa	0.54 (as overpressure if required)			
Gripper flange			ISO 9409-1-40			
Protection rating			IP67			
Robot controller			CR800-D/CR800-R + R16RTCPU			
Order information	IP67 model	Art. no.	313097/ 314064	313099/ 314066	312663/ 314068	751574/ 751866
	IP40 model		313096/ 314063	313098/ 314065	313100/ 314067	751753/ 751865

Please contact your Mitsubishi Electric representative for ESD, ATEX, NRTL certified and cleanroom models.
Additional models without standard 5m machine cable are available.

■ Robot arms RV-13FRM/RV-13FRLM/RV-20FRM/ RV-20FRLM-SC771

RV-13FRM/20FRM/13FRLM /20FRLM-SC771

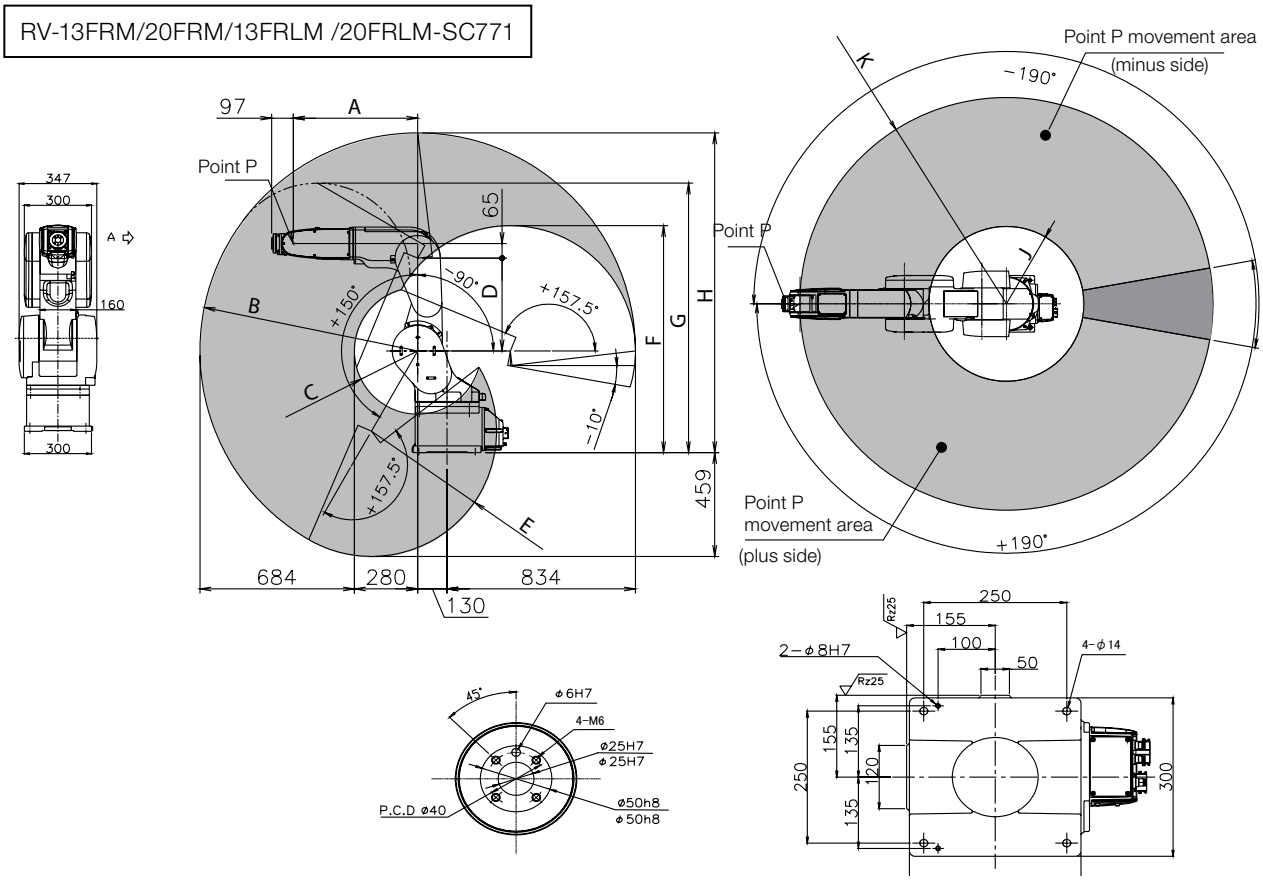

Dimensions: mm

Variable dimensions

Robot series	A	B	C	D	E	F	G	H	J	K
RV-13FRM/20FRM	550	R964	R280	410	R554	1004	1191	1414	R410	R1094
RV-13FRLM /20FRLM-SC771	690	R1258	R328	565	R693	1143	1416	1708	R458	R1388

Industrial robots RV-35FR/50FR/80FR

RV-35FR/50FR/80FR

High capacity robots RV-35FR/50FR/80FR

These robots with payload from 35 kg up to 80 kg are addressing applications that require higher payloads and longer reaches, including CNC machine tending, large material handling, palletizing and end of line packaging.

Highlights:

- Long reach arm up to 2100 mm for tasks can be spread farther apart and can accommodate larger parts and processes
- Multiple environmental protection rating and IP67 for various application requirements
- Seamless integration in the Mitsubishi Electric automation world

Characteristics/Functions			Specifications		
			RV-35FRM-D/ RV-35FRM-R [1]	RV-50FRM-D/ RV-50FRM-R [1]	RV-80FRM-D/ RV-80FRM-R [1]
Degrees of freedom (no. of axes)			6		
Installation posture			Floor		
Structure			Vertical articulated arm		
Drive system			AC servo (all axes with brakes)		
Position detection method			Absolute encoder		
Payload capacity		kg	35	50	80
Arm reachable radius (to the center point of the J5 axis)		mm	2100		
Operating range	waist (J1)	degree	360 (±180)		
	shoulder (J2)		245 (-105–140)		
	elbow (J3)		290(-135–155)		
	wrist twist (J4)		720 (±360)		
	wrist pitch (J5)		290 (±145)		
	wrist roll (J6)		900 (±450)		
Maximum speed	waist (J1)	degree/s	185	180	180
	shoulder (J2)		180	180	180
	elbow (J3)		185	185	160
	wrist twist (J4)		260	260	185
	wrist pitch (J5)		260	260	165
	wrist roll (J6)		360	360	280
Maximum composite speed		mm/s	13400	13400	12700
Position repeatability		mm	±0.06		
Ambient temperature		°C	0–45		
Weight		kg	560		
Tolerable moment	wrist twist (J4)	Nm	210	210	336
	wrist pitch (J5)		210	210	336
	wrist roll (J6)		130	130	194
Tolerable inertia	wrist twist (J4)	kgm²	19.6	28	34
	wrist pitch (J5)		19.6	28	34
	wrist roll (J6)		7.7	11	13.7
Tool wiring			12 input points/8 output points/LAN x 1 (Category 5e)		
Tool pneumatic pipes			Ø 10x2		
Supply pneumatic pressure		MPa	Max. 0.49		
Protection rating			IP65/IP67		
Robot controller			CR860-D/CR860-R + R16RTCPU		
Order information		Art. no.	701530/ 703712	701531/ 703713	701602/ 703714

Please contact your Mitsubishi Electric representative for options.

Robot arms RV-35FR/50FR/80FR

RV-35FR/50FR/80FR

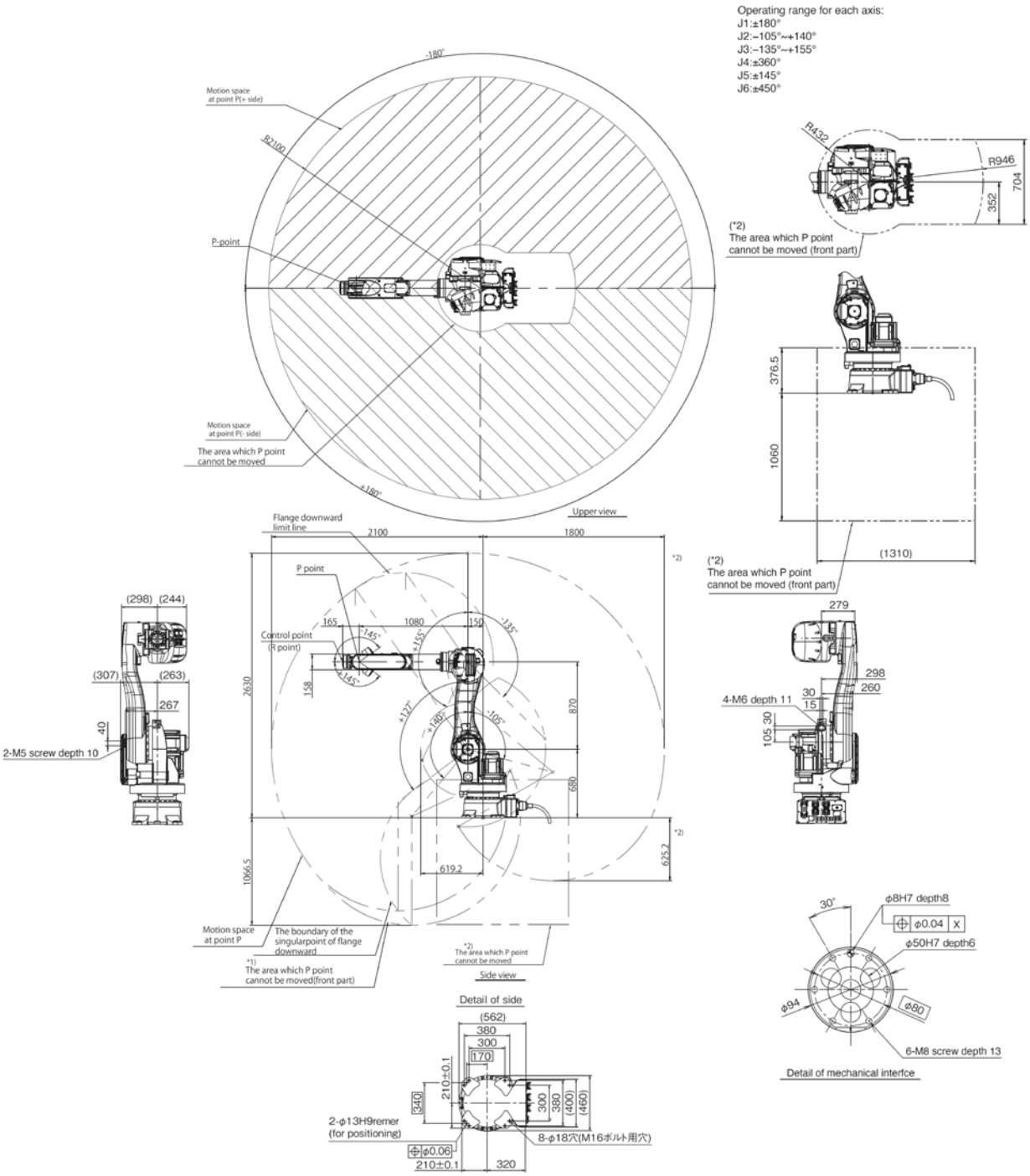

1. The posture of side view
The following figure shown a robot at the position of:J1=0°,J2=0°,J3=90°,J4=0°,J5=0°,J6=0°
2. *1)Rear face operating limit:When the J axis angle is J1<=-137° or +137°<=J1,
the J2 axis operation is limited to J2<=+127°
3. *2) The area which P point cannot be moved : P point cannot move to this area.This limitation is valid at factory shipping,
but it can be released by parameter MELTEXS.

MELFA ASSISTA robot for collaborative applications RV-5AS-D

RV-5AS-D

The robot for collaborative applications RV-5AS-D

MELFA ASSISTA does not require specialized knowledge or expertise.

Advanced safety technology enables humans to collaborate with robots in manufacturing processes and to share workspace.

Highlights:

- Simpler and easier
- Easy control
- Easy visual programming
- Easy connecting

Characteristics/Functions			Specifications	
			RV-5AS-D	RV-5AS-D-S01
Degrees of freedom (no. of axes)			6	
Installation posture			Floor and ceiling mounting possible	
Structure			Vertical articulated arm	
Drive system			AC servo (brakes on all axes)	
Position detection method			Absolute encoder	
Payload capacity	maximum	kg	5	
Arm reachable radius (to the center point of the J5 axis)		mm	910	
Operating range	waist (J1)	degree	±240	
	shoulder (J2)		±148	
	elbow (J3)		±150	
	wrist twist (J4)		±200	
	wrist pitch (J5)		±120	
	wrist roll (J6)		±200	
Maximum speed	waist (J1)	degree/s	124 (59.6)	
	shoulder (J2)		124 (34.0)	
	elbow (J3)		124 (34.0)	
	wrist twist (J4)		297 (142)	
	wrist pitch (J5)		356 (215)	
	wrist roll (J6)		360	
Maximum composite speed		mm/s	1000	
Position repeatability		mm	±0.03	±0.05
Ambient temperature		°C	0–40	
Weight		kg	32	
Tolerable moment	wrist twist (J4)	Nm	12.8	
	wrist pitch (J5)		12.8	
	wrist roll (J6)		4.9	
Tolerable inertia	wrist twist (J4)	kgm²	0.34	
	wrist pitch (J5)		0.34	
	wrist roll (J6)		0.10	
Tool wiring			Mechanical interface: 2 inputs/4 outputs Forearm: 6 inputs/0 outputs Base: 0 inputs/4 outputs	
Tool pneumatic pipes			Primary: Ø6×2, secondary: Ø4×4	
Supply pneumatic pressure		MPa	0.54	
Gripper flange			ISO 9409-1-40	
Protection rating/environment			IP54/ISO class 5	Food-grate H1 grease in all gears and joints, hexagon stainless steel screws
Robot controller			CR800-D	
Order information		Art. no.	502852	502313

■ Robot arms RV-5AS-D

RV-5AS-D

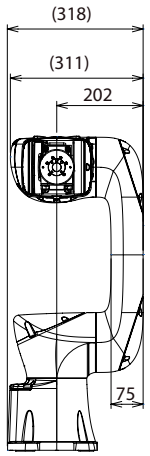

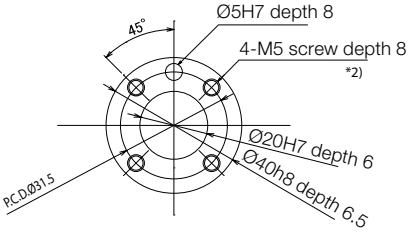

View A: Detail of mechanical interface

*2) The depth in which the screw is tightened is 7.5 to 8 mm.

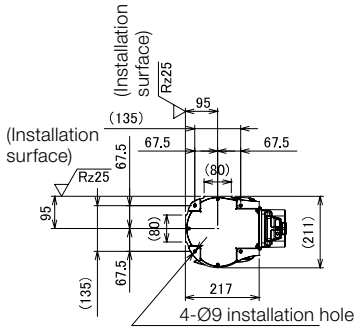

View B: Detailed installation dimensions

The following figure shows a robot at the position of:

J1=0°, J2=0°, J3=90°, J4=0°, J5=0°, and J6=0°

Upper view

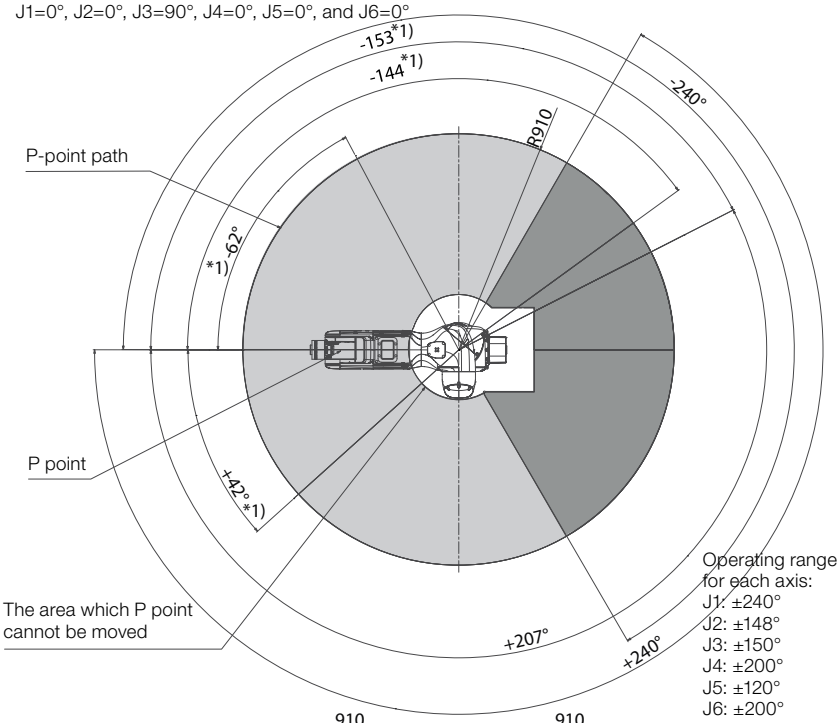

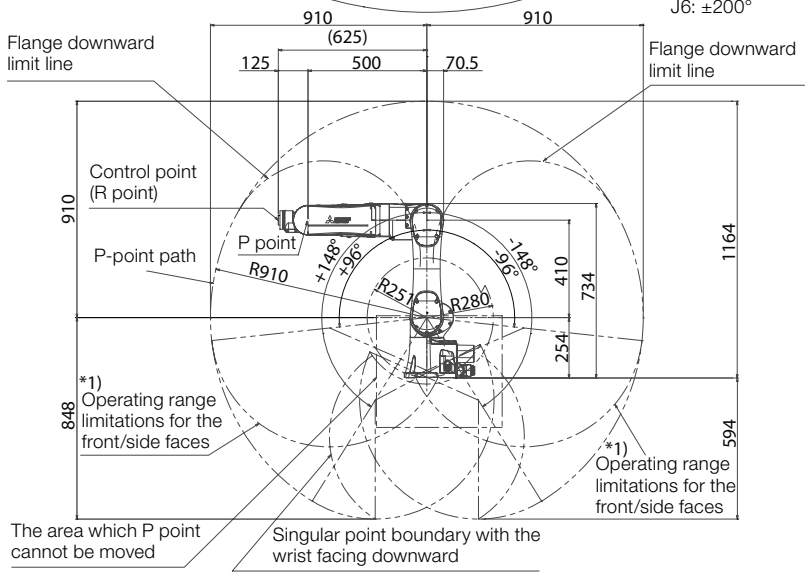

*1) Limits of the front operating range:
If the angle of J1 is -62° ≤ J1 ≤ +207° or J1 ≤ -153°, then J2 is limited to -96° ≤ J2.
If the angle of J1 is +42° ≤ J1 or J1 ≤ -144°, then J2 is limited to J2 ≤ +96°.
If the angle of J2 is J2 ≤ -95°, then J3 is limited to J3 ≤ +146°.
If the angle of J2 is J2 ≤ +30°, then J3 is limited to -146° ≤ J3.

Dimensions: mm

Industrial robot RV-8CRL/12CRL

RV-8CRL

The vertical articulated robot RV-8CRL and RV-12CRL

In addition to a slim, compact exterior and small robot base, its structure features minimal protrusions to the front, back, and sides, resulting in reduced interference with surroundings when the robot operates. This makes it suited to integration with automation cells and manufacturing equipment.

Highlights:

- Compact and functional design
- High permissible moment and inertia for heavy objects and large hands handling
- Beltless coaxial drive mechanism in most axes
- User wiring/piping built into arm
- No backup battery
- IP65 protection
- I/O option card 2D-TZ378 with 32 inputs/32 outputs is included

Characteristics/Functions			Specifications	
			RV-8CRL-D-S15	RV-12CRL-D-S15
Degrees of freedom (no. of axes)			6	
Installation posture			Floor, ceiling or wall mounting possible (wall mounting with limitations in the J1 axis)	Floor, ceiling
Structure			Vertical articulated arm	
Drive system			AC servo (brakes on all axes)	
Position detection method			Absolute encoder	
Payload capacity	maximum	kg	8	12
Arm reachable radius (to the center point of the J5 axis)		mm	931	1504
Operating range	waist (J1)	degree	±170	±170
	shoulder (J2)		±110	-90–150
	elbow (J3)		0–165	0–170
	wrist twist (J4)		±200	±190
	wrist pitch (J5)		±120	±120
	wrist roll (J6)		±360	±360
Maximum speed	waist (J1)	degree/s	288	270
	shoulder (J2)		321	253
	elbow (J3)		360	290
	wrist twist (J4)		337	487
	wrist pitch (J5)		450	480
	wrist roll (J6)		720	780
Maximum composite speed		mm/s	10500	10500
Cycle time (25x300x25 mm with 1 kg load)		sec	0.44	0.38
Position repeatability		mm	±0.02	±0.04
Ambient temperature		°C	0–40	0–40
Weight		kg	41	110
Tolerable moment	wrist twist (J4)	Nm	16.2	26.5
	wrist pitch (J5)		16.2	26.5
	wrist roll (J6)		6.86	11
Tolerable inertia	wrist twist (J4)	kgm²	0.45	0.9
	wrist pitch (J5)		0.45	0.9
	wrist roll (J6)		0.10	0.3
Tool wiring			15-pins, D-sub	15-pins x2
Tool pneumatic pipes			Ø 6x2	Ø 6x2, Ø 8x1
Supply pneumatic pressure		MPa	0.54	
Gripper flange			ISO 9409-1-40	
Protection rating			IP65	
Robot controller			CR800-D	
Order information		Art. no.	492799	713769

■ Robot arms RV-8CRL/RV-12CRL

RV-8CRL

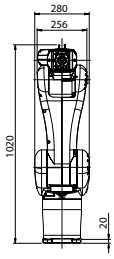

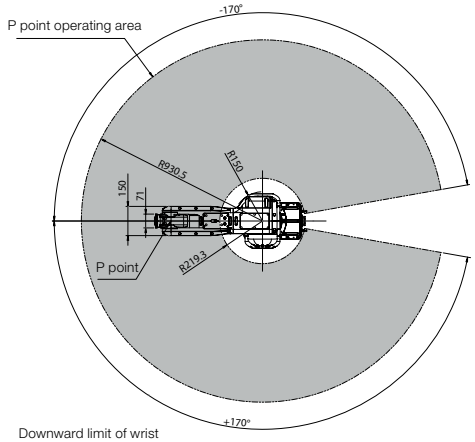

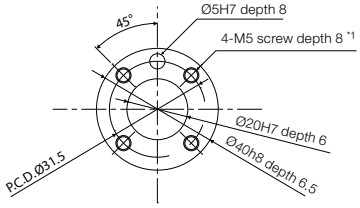

View A: Detail of mechanical interface

*1) The depth in which the screw is tightened is 7.5 to 8 mm.

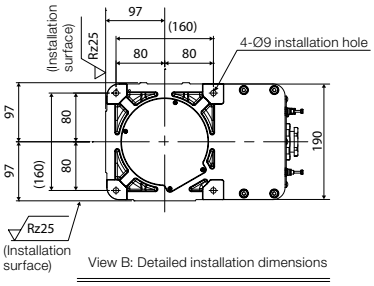

View B: Detailed installation dimensions

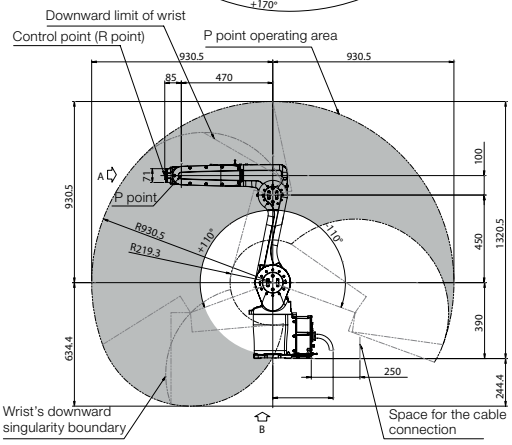

Dimensions: mm

RV-12CRL

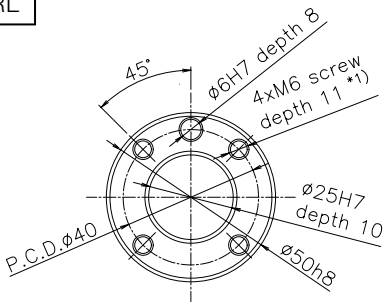

View C: Detail of mechanical interface

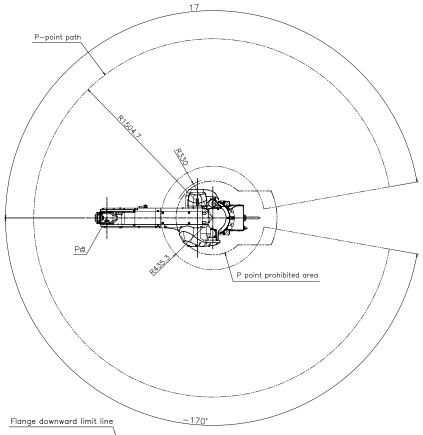

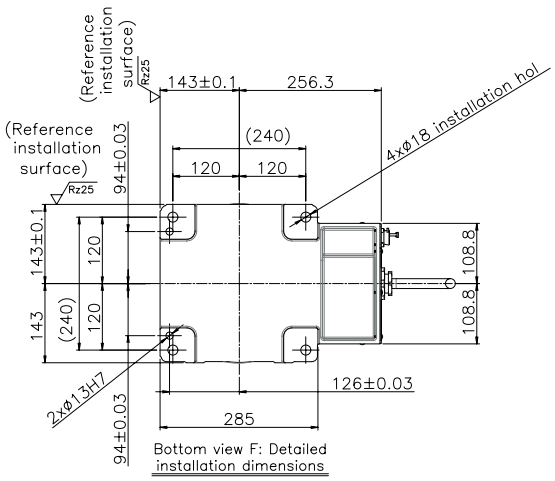

Bottom view F: Detailed installation dimensions

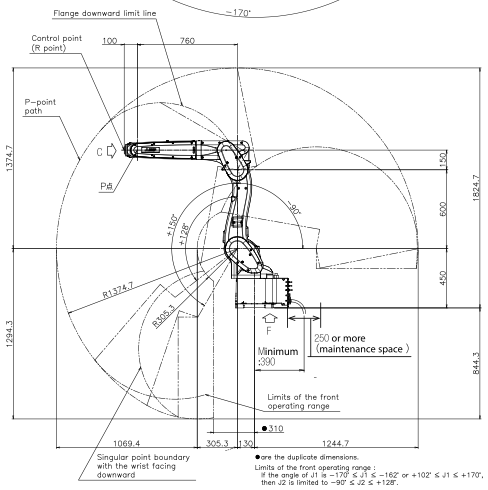

Industrial robots RH-1FRHR

SCARA robot for overhead installation

With its special compact design and support for overhead installation above the application, the robot RH-1FRHR doesn't take up any valuable space in the work area next to the installation location, enabling even smaller work cell dimensions.

The RH-1FRHR5515 is a high-speed robot dedicated for the handling of small parts up to 1 kg. Up to 150 picks/min with conveyor tracking including hand open/close are possible.

Highlights:

- High-speed 4 axis robots for fastest pick and place (cycle times of only 0.28 s)
- Up to 150 picks/min. with conveyor tracking including hand open/close
- Space saving and flexible installation method
- Optionally integrated vacuum valve and bellow for highest requirements in pharmaceutical and F&B application

Characteristics/Functions			Specifications	
			RH-1FRHR5515-D	RH-1FRHR5515-R
Degrees of freedom (no. of axes)			4	
Installation posture			On floor, ceiling mounting, wall mounting	
Structure			Horizontal articulated arm	
Drive system			AC servo	
Position detection method			Absolute encoder	
Brake attachment			Axes J1, J2, J4: no brake; axis J3: with brake	
Payload capacity	rated	kg	1	
	maximum		3	
Maximum reach		mm	550	
Operating range	J1	degree	±177	
	J2	degree	±145	
	J3 (Z)	mm	150	
	J4 (Θ axis)	degree	±360	
Maximum speed	J1	degree/s	337.5	
	J2	degree/s	720	
	J3 (Z)	mm/s	765	
	J4 (Θ axis)	degree/s	3000	
Maximum composite speed		mm/s	6267	
Cycle time (25x300x25 mm with 1 kg load)		sec	0.28	
Allowable wrist moment of inertia	rated	kgm^2	0.005	
	maximum		0.005	
Position repeatability	X, Y direction	mm	±0.012	
	J3 (Z direction)	mm	±0.01	
	J4 (Θ axis)	degree	±0.004	
Ambient temperature		°C	0–40	
Weight		kg	49	
Tool wiring			Hand: 8 inputs/8 outputs, 8 signal cables	
Tool pneumatic pipes			Primary: Ø 6x2 (secondary: Ø 4x8 by option)	
Supply pneumatic pressure		MPa	5 ±10 % for the pneumatic gripper	
Protection rating			IP20 (IP65/ISO class 5 with additional bellow)	
Robot controller			CR800-D	CR800-R + R16RTCPU
Order information		Art. no.	312997	313661

Additional models without standard 5m machine cable are available.

■ Robot arms RH-1FRHR

RH-1FRHR

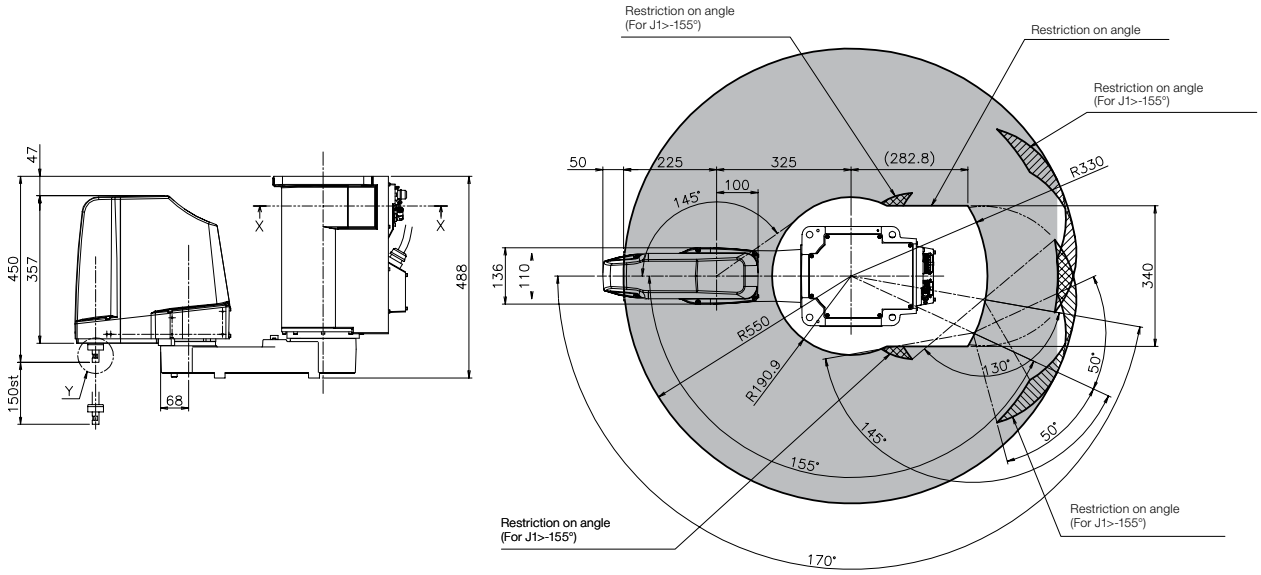

Dimensions: mm

Industrial robots RH-3FRHR

RH-3FRHR

The SCARA robots RH-3FRHR

With its special compact design and support for overhead installation above the application, the robot RH-3FRHR doesn't take up any valuable space in the work area next to the installation location, enabling even smaller work cell dimensions. The robot's perfectly circular cylindrical workspace is 150 mm high with a diameter of 700 mm. It can access any point in this space with a repeatability of just ±0.01 mm while manipulating a payload of up to 3 kg.

Highlights:

- Overhead installation for minimum space requirements
- Only 24 kg weight
- Cycle times of only 0.32 s
- High stability due to compact design
- Pneumatic hoses and signal wires are routed inside the robot

Characteristics/Functions			Specifications	
			RH-3FRHR3515-D-S25	RH-3FRHR3515-R-S25
Degrees of freedom (no. of axes)			4	
Installation posture			Overhead	
Structure			Horizontal articulated arm	
Drive system			AC servo	
Position detection method			Absolute encoder	
Brake attachment			Axes J1, J2, J4: no brake; axis J3: with brake	
Payload capacity	rated	kg	1	
	maximum		3	
Maximum reach	arm 1 + arm 2	mm	350	
Operating range	J1	degree	450 (±225)	
	J2	degree	450 (±225)	
	J3 (Z)	mm	150	
	J4 (Θ axis)	degree	1440 (±720)	
Maximum speed	J1	degree/s	672	
	J2	degree/s	708	
	J3 (Z)	mm/s	1500	
	J4 (Θ axis)	degree/s	3146	
Maximum composite speed		mm/s	6267 (J1, J2)	
Cycle time (25x300x25 mm with 1 kg load)		sec	0.32	
Allowable wrist moment of inertia	rated	kgm^2	0.005	
	maximum		0.05	
Position repeatability	X, Y direction	mm	±0.01	
	J3 (Z direction)	mm	±0.01	
	J4 (Θ axis)	degree	±0.01	
Ambient temperature		°C	0–40	
Weight		kg	24	
Tool wiring			Input 8 points/output 8 points (option: output 8 points), 8 spare wires	
Tool pneumatic pipes			Primary: Ø 6x2 (secondary: Ø 4x8 by option)	
Supply pneumatic pressure		MPa	5 ±10 % for the pneumatic gripper	
Protection rating			IP20	
Robot controller			CR800-D	CR800-R + R16RTCPU
Order information		Art. no.	312998	314028

Please contact your Mitsubishi Electric representative for IP65 and cleanroom models.
Additional models without standard 5m machine cable are available.

Robot arms RH-3FRHR

RH-3FRHR

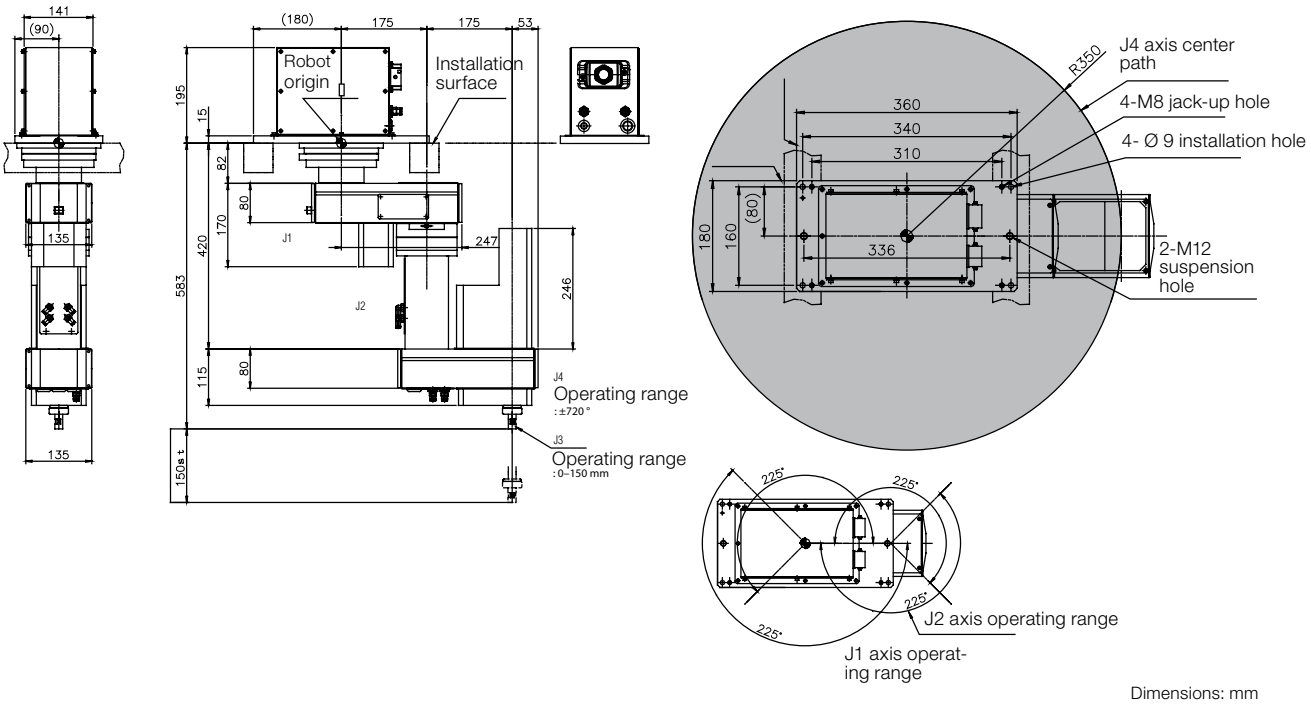

Dimensions: mm

Industrial robots RH-FRH

RH-12FRH

RH-6FRH

The SCARA robots RH-FRH

SCARA robots are ideal for sorting, palletizing and component installation due to their short cycle time. The robots of the RH-FR series achieve the highest speeds in their class thanks to the new motors developed by Mitsubishi Electric, high arm rigidity, and unique control technology. The resulting reduced cycle time of only 0.29 seconds for a 12" cycle make for significantly increased productivity and improved continuous operation.

Highlights:

- Connections for pneumatic grippers, Ethernet, USB, tracking functions, camera interface, hand I/O, additional axis controller and an interface for GOT HMIs.
- Fully enclosed cabling to end of spindle for protection and safety
- RH-6/12/20FRH has the tried-and-tested protection class IP54 (IP65 optional)

Characteristics/Functions			Specifications			
			RH-3FRH5515-D/ RH-3FRH5515-R	RH-6FRH5520N-D/ RH-6FRH5520N-R	RH-12FRH8535N-D/ RH-12FRH8535N-R	RH-20FRH10035N-D/ RH-20FRH10035N-R
Degrees of freedom (no. of axes)			4			
Installation posture			Floor mounting			
Structure			Horizontal articulated arm			
Drive system			AC servo			
Position detection method			Absolute encoder			
Brake attachment			Axes J1, J2, J4: no brake; axis J3: with brake			
Payload capacity	rated	kg	1	3		5
	maximum		3	6	12	20
Maximum reach	arm 1 + arm 2	mm	550	550	850	1000
Operating range	J1	degree	340 (±170)			
	J2	degree	290 (±145)		306 (±153)	
	J3 (Z)	mm	150	200	350	
	J4 (Θ axis)	degree	720 (±360)			
Maximum speed	J1	degree/s	400		280	
	J2	degree/s	720	670	450	
	J3 (Z)	mm/s	1100	2400	2800	2400
	J4 (Θ axis)	degree/s	3000	2500	2400	1700
Maximum composite speed		mm/s	8300		11350	13283
Cycle time (25x300x25 mm with max. 2 kg load)		sec	0.51	0.29	0.30	0.36
Allowable wrist moment of inertia	rated	kgm^2	0.005	0.01	0.025	0.065
	maximum		0.06	0.12	0.3	1.05
Position repeatability	X, Y direction	mm	±0.012		±0.015	
	J3 (Z direction)	mm	±0.010			
	J4 (Θ axis)	degree	±0.004		±0.005	
Ambient temperature		°C	0–40			
Weight		kg	32	37	69	77
Tool wiring			Input 8 points/output 8 points (total 20 scores)			
Tool pneumatic pipes			Primary: Ø 6x2, secondary: Ø 4x8			
Supply pneumatic pressure		MPa	5 ±10 % for the pneumatic gripper			
Protection rating			IP20	IP54 (IP65 with additional bellow)		
Robot controller			CR800-D/CR800-R + R16RTCPU			
Order information		Art. no.	312930/ 313651	312985/ 313666	312991/ 313672	312995/ 313676

Please contact your Mitsubishi Electric representative for ESD and cleanroom models.
Additional models without standard 5m machine cable are available.

Robot arms RH-FRH

RH-3FRH

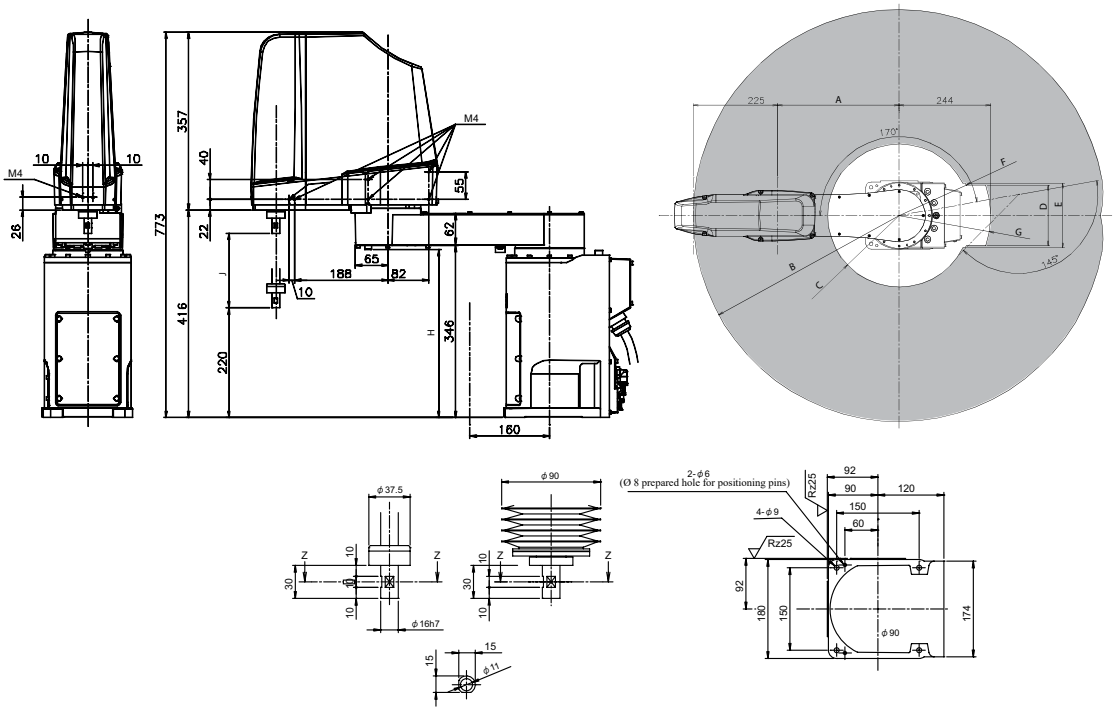

Dimensions: mm

Variable dimensions

Robot series	A	B	C	D	E	F	G	H	J
RH-3FRH5515	125	R550	R142	210	R253	220	R174	342	150

RH-6FRH

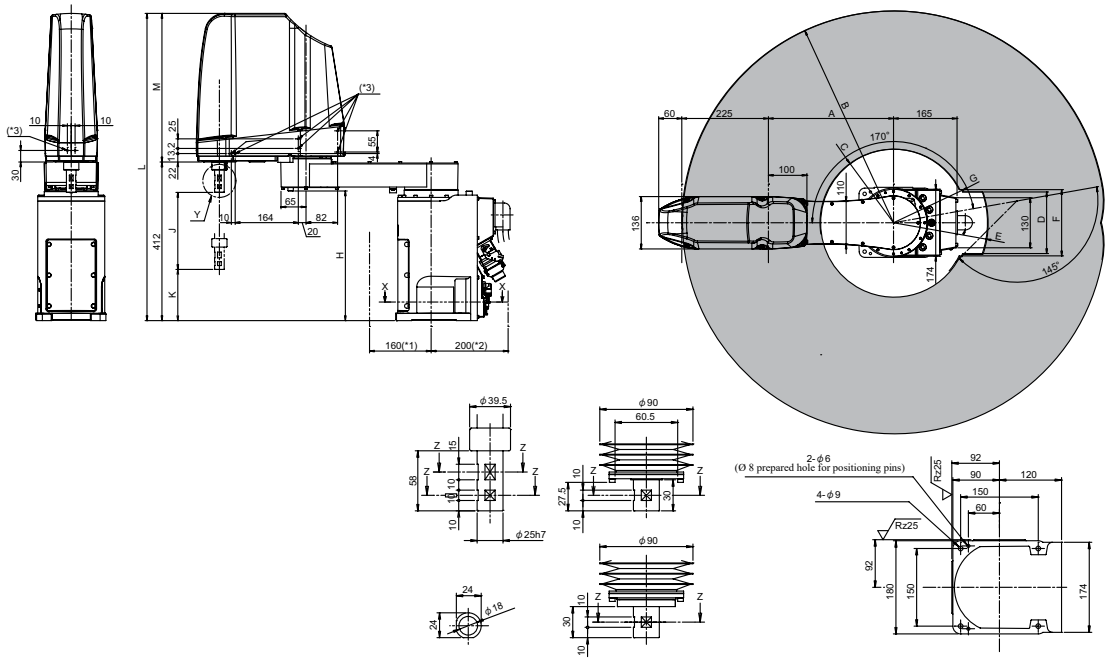

Dimensions: mm

Variable dimensions

Robot series	A	B	C	D	E	F	G	H	J	K	L	M
RH-6FRH5520	325	R550	R191	160	R244	172	R197	337	200	133	798	386

RH-12FRH/20FRH

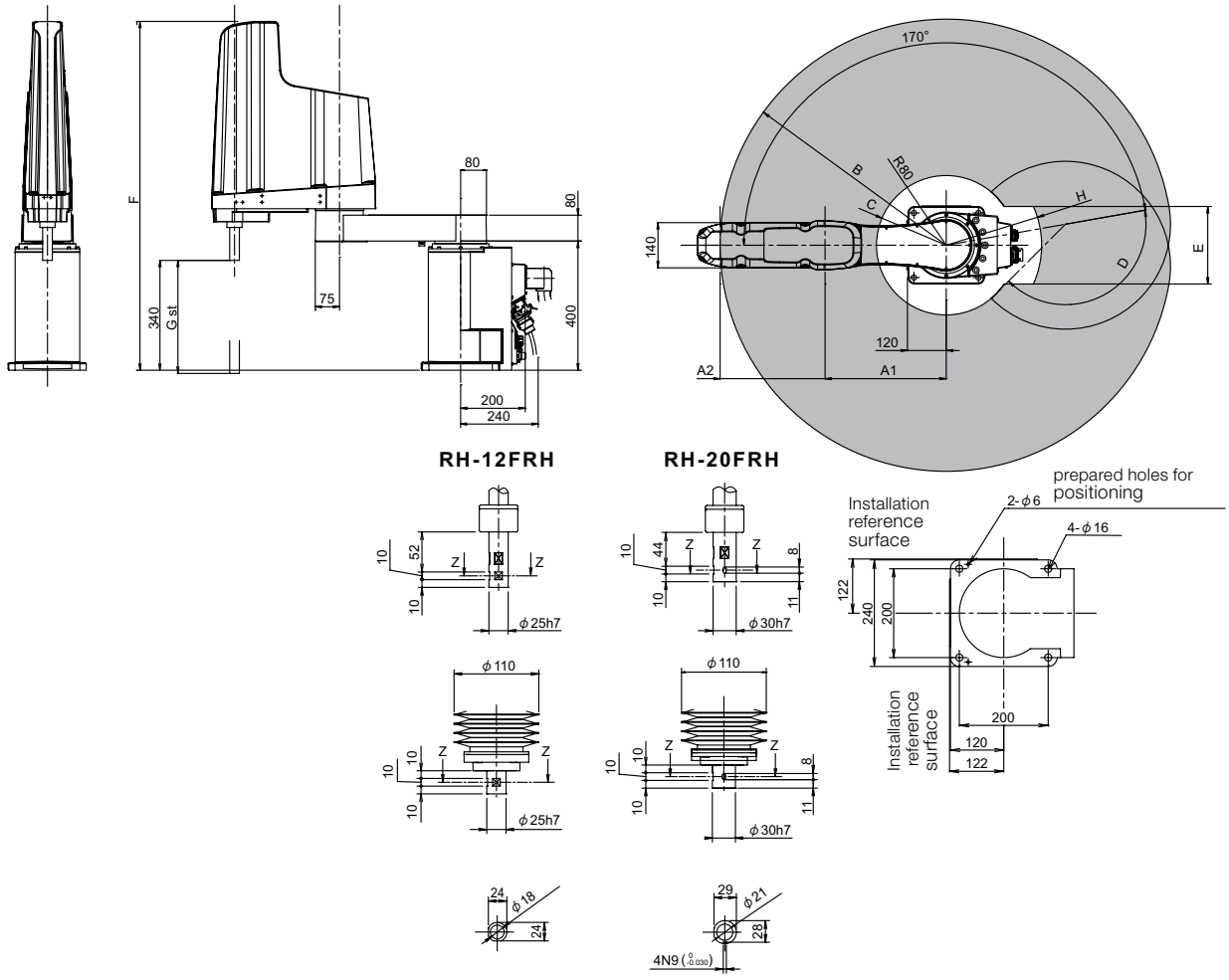

Dimensions: mm

Variable dimensions

Robot series	A1	A2	B	C	D	E	F	G	H
RH-12FRH/20FRH8535	525	325	R850	R278	153°	—	1080/1180	350/340	—
RH-20FRH10035	525	475	R1000	R238	153°	240	1080/1180	350/340	R295

Industrial robots RH-CRH

RH-3CRH

The SCARA robots RH-CRH

These robots expand the Mitsubishi Electric SCARA robot product portfolio and are perfect for pick & place, assembly and conveyor tracking applications where a cost-efficient solution is required. Thanks to their compact design and large working area, the RH-CRH robots are suitable for a wide range of applications. Servo motor with battery-less absolute encoder ensure easy maintenance and stress-free operation

Highlights:

- Compact arm for space saving
- Lightweight robot arms
- High-speed operation and high performance for productivity
- Excellent cost performance
- MELFA SafePlus option supports safety monitoring functions and can directly handle the safety logic in the robot controller without using a safety PLC
- I/O option card 2D-TZ378 with 32 inputs/32 outputs is included

Characteristics/Functions			Specifications		
			RH-3CRH4018-D-S15	RH-6CRH6020-D-S15	RH-6CRH7020-D-S15
Degrees of freedom (no. of axes)			4		
Installation posture			Floor mounting		
Structure			Horizontal articulated arm		
Drive system			AC servo		
Position detection method			Absolute encoder		
Brake attachment			Axes J1, J2: no brake; axes J3, J4: with brake		
Payload capacity	rated	kg	1	2	
	maximum		3	6	
Maximum reach		mm	400	600	700
Operating range	J1	degree	264 (±132)		
	J2	degree	282 (±141)	300 (±150)	
	J3 (Z)	mm	180	200	
	J4 (θ axis)	degree	720 (±360)		
Maximum speed	J1	degree/s	720	420	360
	J2	degree/s	720		
	J3	mm/s	1100		
	J4	degree/s	2600	2500	
	J1+J2	mm/s	7200	7800	
Cycle time (25x300x25 mm with 1 kg load)		sec	0.44	0.41	0.43
Allowable wrist moment of inertia	rated	kgm^2	0.005	0.01	
	maximum		0.05 (0.075)	0.12 (0.18)	
Position repeatability	X, Y direction	mm	±0.01	±0.02	
	J3 (Z direction)	mm	±0.01		
	J4 (θ axis)	degree	±0.01		
Ambient temperature		°C	0–40		
Weight		kg	14	17	18
Tool wiring			15-pins, D-sub		
Tool pneumatic pipes			Ø 6x2, Ø 4x1		
Supply pneumatic pressure		MPa	0.5 ±10 %		
Protection rating			IP20		
Robot controller			CR800-D		
Order information		Art. no.	500837	500838	500839

Please contact your Mitsubishi Electric representative for models with installed bellow

Characteristics/Functions			Specifications				
			RH-10CRH6020-D-S15 RH-10CRH6030-D-S15	RH-10CRH7020-D-S15 RH-10CRH7030-D-S15	RH-10CRH8020-D-S15 RH-10CRH8030-D-S15	RH-20CRH8542-D-S15	RH-20CRH10042-D-S15
Degrees of freedom (no. of axes)			4				
Installation posture			Floor mounting				
Structure			Horizontal articulated arm				
Drive system			AC servo				
Position detection method			Absolute encoder				
Brake attachment			Axes J1, J2: no brake; axes J3, J4: with brake				
Payload capacity	rated	kg	5			10	
	maximum		10			20	
Maximum reach		mm	600	700	800	850	1000
Operating range	J1	degree	264 (±132)			340 (±170)	
	J2	degree	300 (±150)			290 (±145)	306 (±153)
	J3 (Z)	mm	200 300			420	
	J4 (Θ axis)	degree	720 (±360)				
Maximum speed	J1	degree/s	420			375	
	J2	degree/s	720			600	
	J3	mm/s	1100			2300	
	J4	degree/s	2700			1600	
	J1+J2	mm/s	9110	9840	10570	10530	11510
Cycle time (25x300x25 mm with 1 kg load)		sec	0.41	0.42		0.37	
Allowable wrist moment of inertia	rated	kgm^2	0.02			0.05	
	maximum		0.3			1.0	
Position repeatability	X, Y direction	mm	±0.02		±0.025	±0.025	
	J3 (Z direction)	mm	±0.01				
	J4 (Θ axis)	degree	±0.01				
Ambient temperature		°C	0–40				
Weight		kg	20		21	54	57
Tool wiring			15-pins, D-sub			15-pins & 9pins, D-sub	
Tool pneumatic pipes			Ø 6x2, Ø 4x1			Ø 8x2, Ø 6x2	
Supply pneumatic pressure		MPa	0.5 ±10 %				
Protection rating			IP20				
Robot controller			CR800-D				
Order information		Art. no.	732974 732977	732975 732978	732976 732979	732980	732981

Robot arms RH-CRH

RH-3CRH

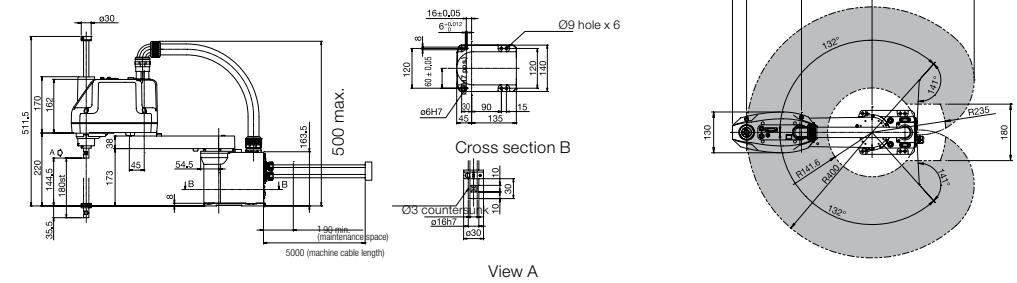

RH-6CRH

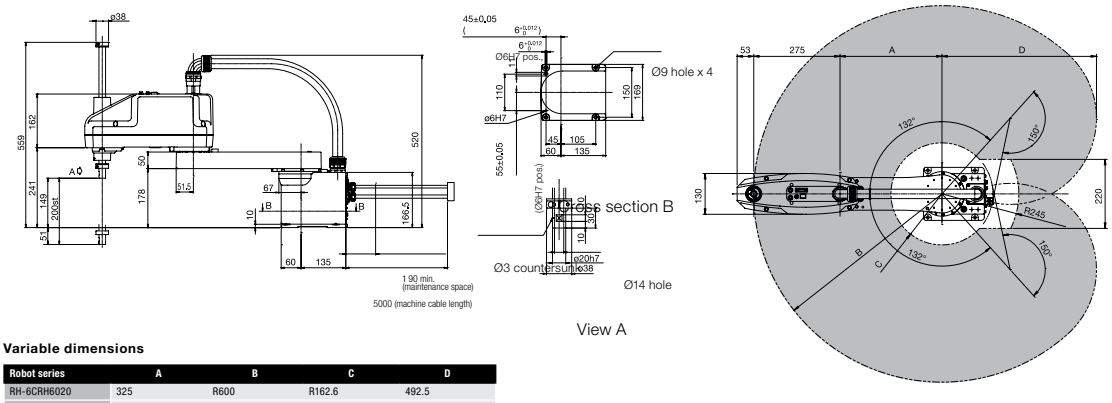

Variable dimensions

Robot series	A	B	C	D
RH-6CRH6020	325	R600	R162.6	492.5
RH-6CRH7020	425	R700	R232	559.4

This is the space required for battery replacement, and indicates the dimensions including the minimum bending radius of the machine cable.

Dimensions: mm

RH-10CRH

(Unit: mm)

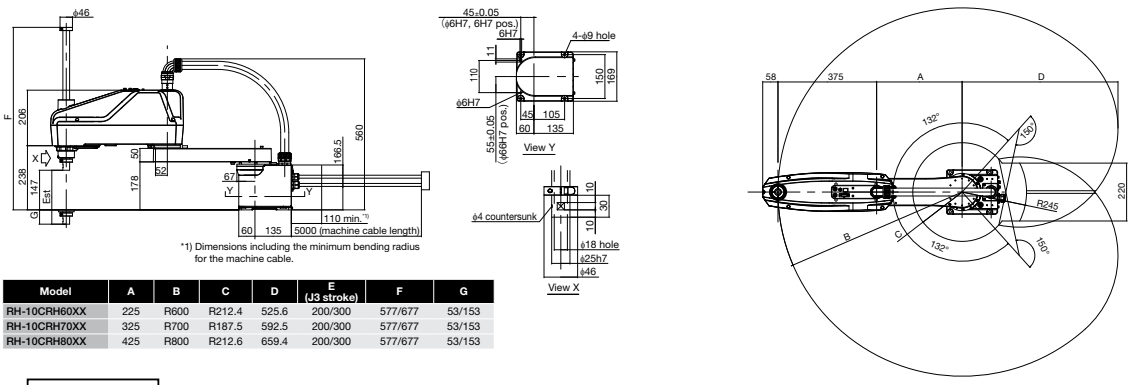

*1) Dimensions including the minimum bending radius for the machine cable.

Model	A	B	C	D	E (J3 stroke)	F	G
RH-10CRH60XX	225	R600	R212.4	525.6	200/300	577/677	53/153
RH-10CRH70XX	325	R700	R187.5	592.5	200/300	577/677	53/153
RH-10CRH80XX	425	R800	R212.6	659.4	200/300	577/677	53/153

RH-20CRH

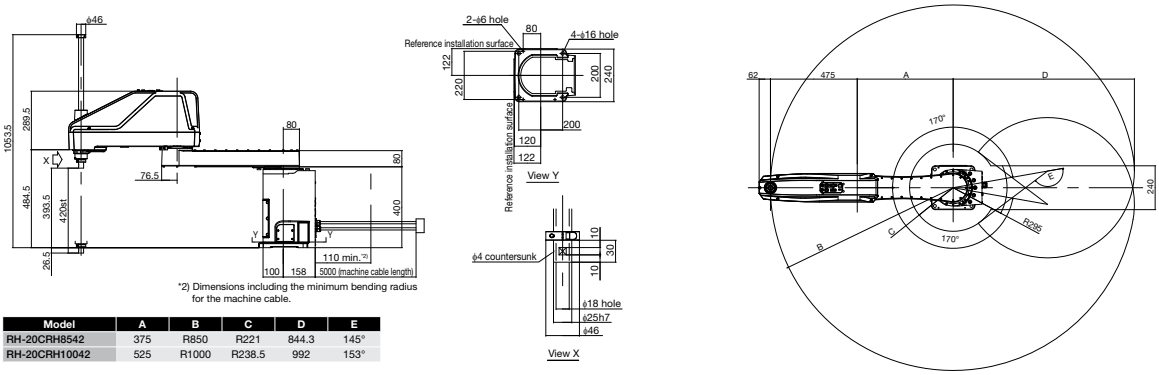

*2) Dimensions including the minimum bending radius for the machine cable.

Model	A	B	C	D	E
RH-20CRH8542	375	R850	R221	844.3	145°
RH-20CRH10042	525	R1000	R238.5	992	153°

FR-D series system configuration

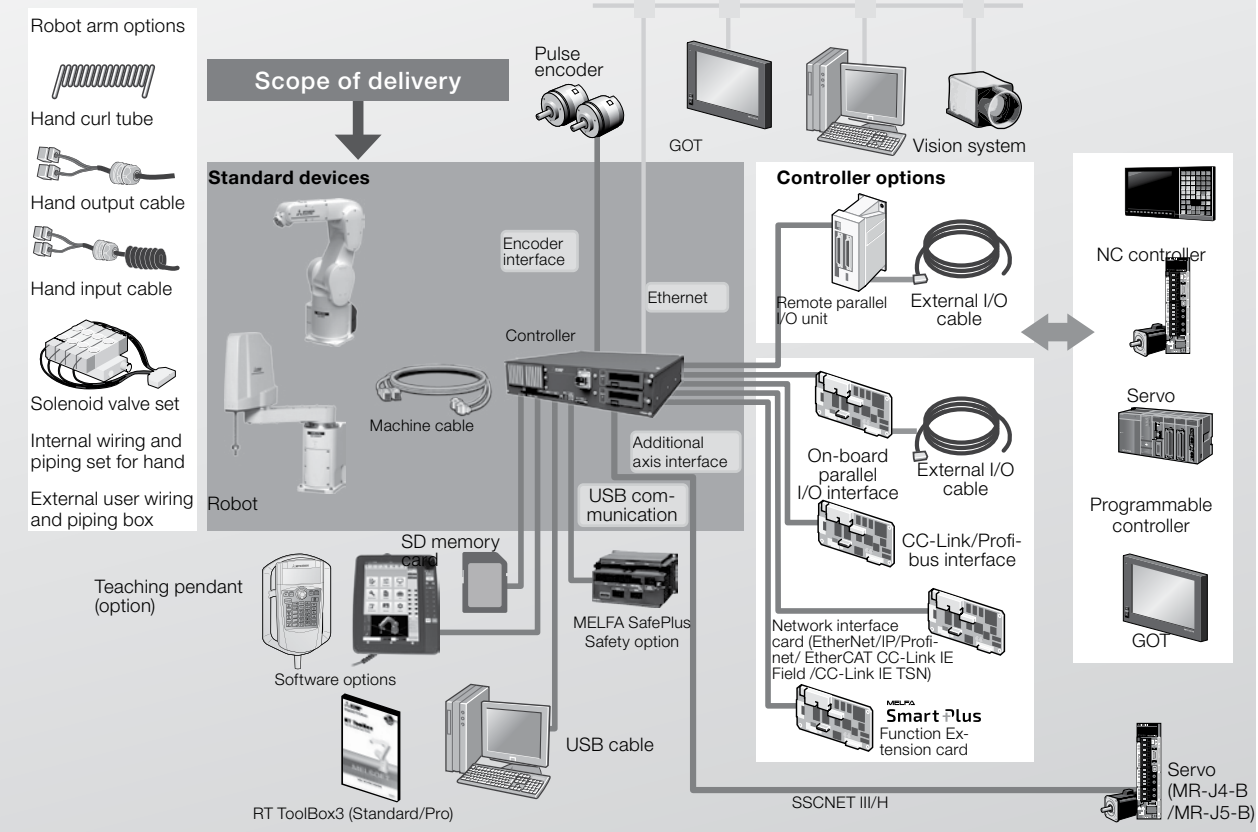

FR-R series system configuration (iQ-R Platform)

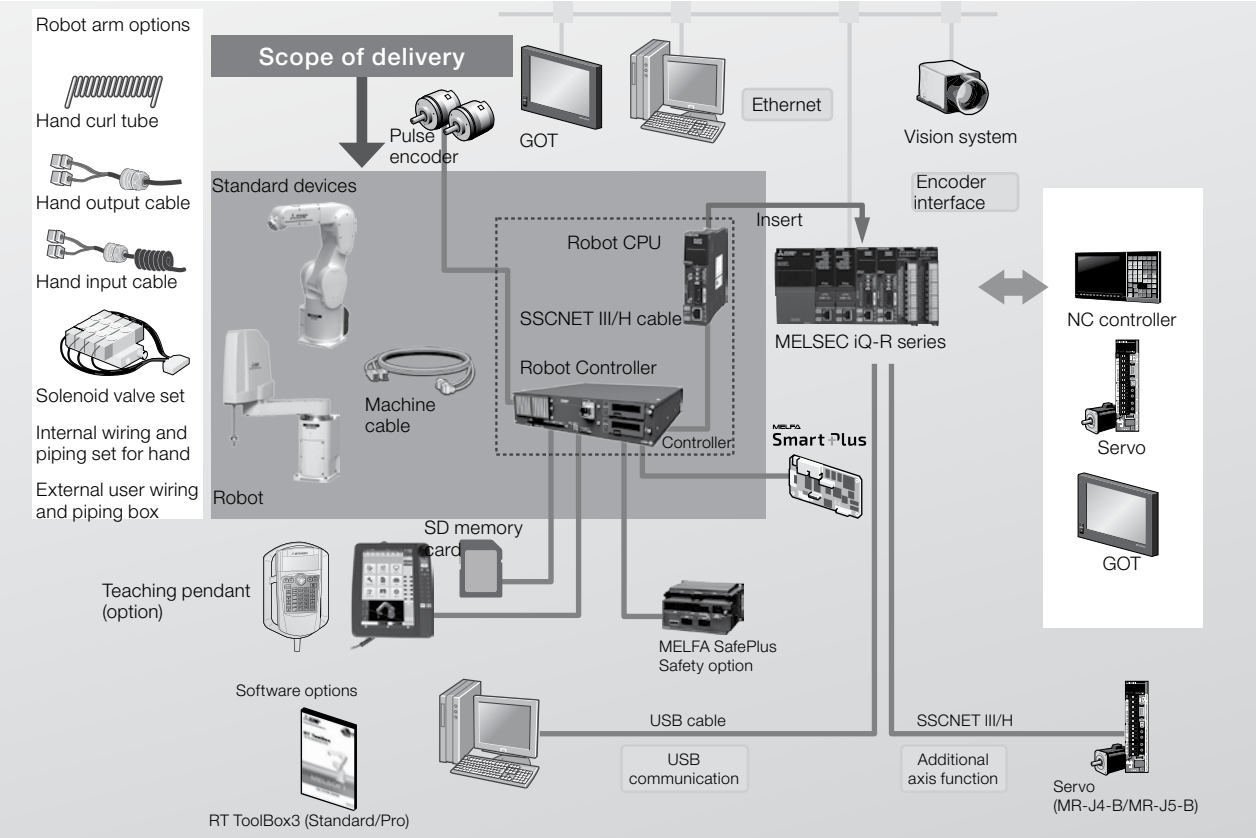

Controller specifications

Controller CR800

Powerful controller

Every robot system has its own compact, modular robot controller, which contains the CPU and the power electronics for controlling the robot.

Mitsubishi Electric's robot controllers have a particularly slim, compact design. No matter which MELFA robot you use the programming language and options are always the same. You can add special application functions by inserting expansion option cards in the slots in the controllers. Therefore it is possible, to integrate the controller into different types of networks.

All controllers have already implemented functions like Ethernet and USB connection, additional axes control over SSCNET III/H and tracking encoder interface as a standard.

The Ethernet interface corresponds to CC-Link IE Field Basic and Modbus TCP as built-in functions.

The control unit CR800 also includes the input and output card for the connection of a pneumatic or electric gripper.

Characteristics/Functions			CR800-D	CR800-R
Shipped with robot			RV-2FR/2FRL/4FR/4FRL/7FR/7FRL/7FRLL/13FR/13FRL/20FR/20FRL/RV-5AS/RV-8CRL/RV-12CRL RH-1FHR/3FRHR/3FRH/6FRH/12FRH/20FRH/RH-CRH	
Robot CPU			—	R16RTCPU
Path control method			PTP control and CP control	
Number of controllable axes			6 robot axes + 2 interpolation axes + 6 independent axes	
Programming language			MELFA-BASIC V/VI	
Position teaching method			Teaching method, MDI method	
Memory capacity	no. of teaching points		39000	
	no. program steps		78000	
	no. of programs		512	
External inputs/ outputs	general purpose I/Os		Up to 256 optional	Up to 8192 shared with PLC CPU
	dedicated I/Os		Assigned to general-purpose I/O	Assigned to multiple CPU common device
	hand open/close		8 inputs/8 outputs	
	emergency stop I/Os		1 (redundant)	
	door switch input		1 (redundant)	
	enabling device input		—	
	mode output		1 (redundant)	
	robot error output		1 (redundant)	
	synchronization of additional axes		1 (redundant)	
	Ethernet		1 (10BASE-T/ 100BASE-TX/1000BASE-T)	
	USB		1 (Ver. 2.0 device functions only, mini B terminal)	1 (USB port of programmable controller CPU unit can be used.)
SD memory slot			1	
Ambient temperature		° C	0–40	0–40 (controller)/0–55 (Robot CPU)
Relative humidity		% RH	45–85	
Power supply	input voltage range	V	RV-2F(L)/4F(L)/7F(L), RH-1FRHR/3FRH/3FRHR/6FRH/12FRH/20FRH: 1-phase 180–253 V AC RV-7FRLL/13FR(L)/20FR: 3-phase 180–253 V AC or 1-phase 207–253 V AC RV-5AS: 1-phase 100–120 V AC (200–230 V AC), RV-8CRL, RH-CRH: 200–230 V AC	
	power capacity	kVA	RV-2FR(L), RH-3FRH, RH-3CRH/6CRH: 0.5; RV-4FR(L), RH-3FRHR/6FRH, RV-5AS: 1.0; RH-1FRHR/12FRH/20FRH, RH-10CRH/20CRH: 1.5; RV-7FR(L), RV-8CRL: 2.0; RV-7FRLL/13FR(L)/20FR (L): 3.0	
Dimensions (WxHxD) including legs		mm	430x99.5x425	
Weight		kg	12.5	
Structure (protective specification)			Self-contained floor type/open structure (Vertical and horizontal position can be placed) (IP20) + IP54 protection box available as an option	
Grounding		Ω	100 or less (class D grounding)	

Characteristics/Functions			CR860-D	CR860-R
Shipped with robot			RV-35FR/50FR/80FR	
Robot CPU			Built-in	R16RTCPU
Path control method			PTP control and CP control	
Number of controllable axes			6 robot axes + 2 interpolation axes + 6 independent axes	
Programming language			MELFA-BASIC V/VI	
Position teaching method			Teaching method, MDI method	
Memory capacity	no. of teaching points		39000	
	no. program steps		78000	
	no. of programs		512	
External inputs/ outputs	general purpose I/Os		Up to 256 optional	Up to 8192 shared with PLC CPU
	dedicated I/Os		Assigned to general-purpose I/O	Assigned to multiple CPU common device
	hand open/close		12 inputs/8 outputs	
	emergency stop I/Os		1 (redundant)	
	door switch input		1 (redundant)	
	enabling device input		1 (redundant)	
	mode output		1 (redundant)	
	robot error output		1 (redundant)	
	synchronization of additional axes		1 (redundant)	
	Ethernet		1 (10BASE-T/ 100BASE-TX/1000BASE-T)	
	USB		1 (Ver. 2.0 device functions only, mini B terminal)	1 (USB port of programmable controller CPU unit
Machine cable	included fixed type	m	7	
	option fixed type	m	12, 17, 22	
	option flexible type	m	7, 12, 17, 22	
Ambient temperature		° C	0–45	0–45 (controller)/0–55 (Robot CPU)
Relative humidity		% RH	10–85	
Power supply	input voltage range	V	3 phase 378-462 V AC with transformer unit	
	power capacity	kVA	10	
Dimensions (WxHxD)	controller	mm	670x670x500	
	transfromer unit	mm	670x515x502	
Weight	controller	kg	80	
	transfromer unit	kg	120	
Structure (protective specification)			Self-contained floor type/Enclose type IP54 (Fan part: IP2X)	
Grounding		Ω	100 or less (class D grounding)	

■ Controller dimensions

CR800

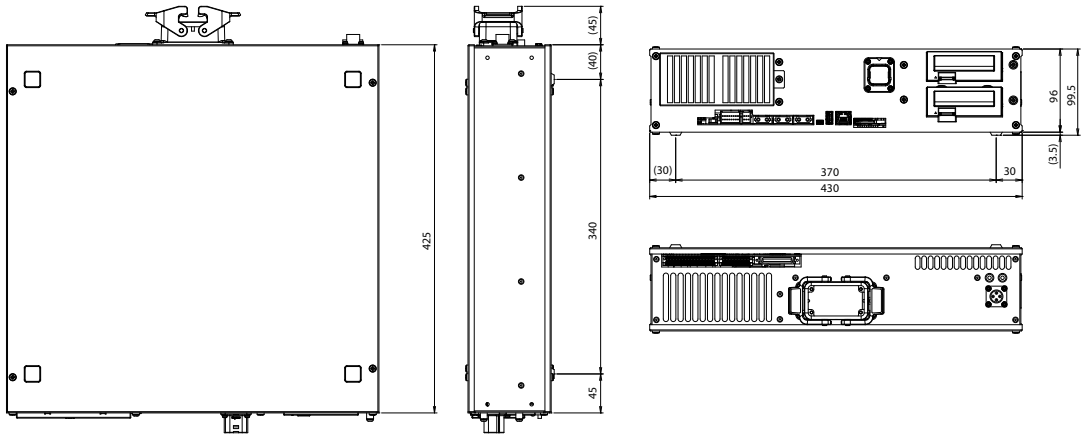

CR860 Controller

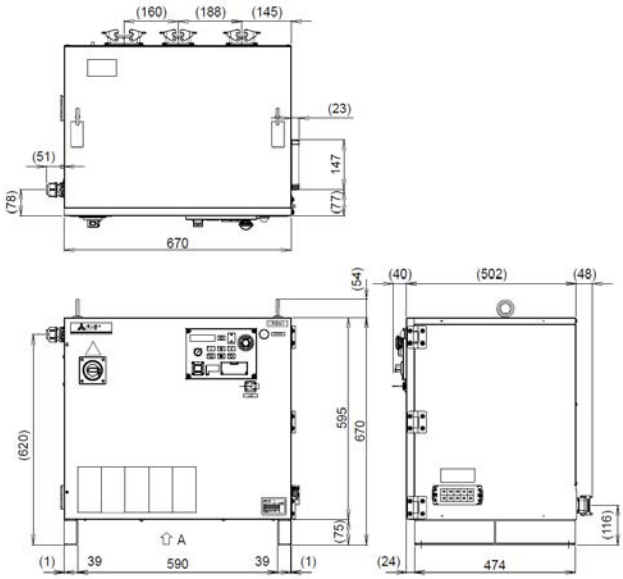

CR860 Transformer Unit

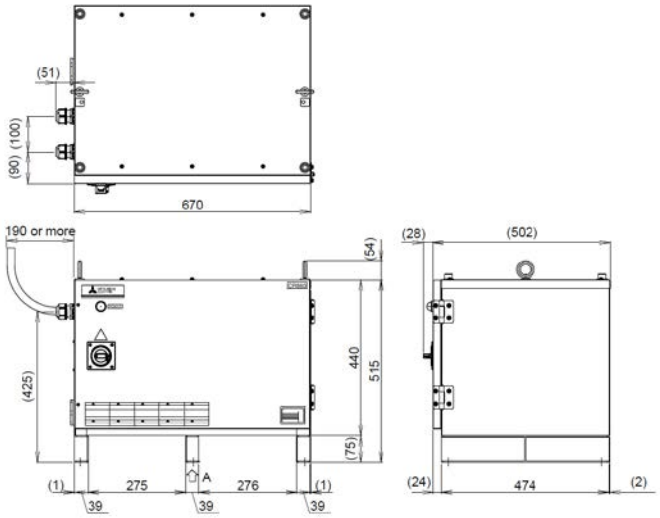

Teaching box for the robot series

R86TB

Operation and programming

The High-Performance Teaching Box (R86TB) offers a comprehensive solution that combines enhanced functionality, easiness to use and cost reduction. Making your automation processes more efficient and cost-effective.

Improved processing speed and large 10.1" high-definition display allows stress-free and flexible operability. The TB offers still secure physical buttons for tactile and consistent operation.

Equipped with major functions of robot engineering software RT Toolbox3, allows users quickly leverage their existing knowledge and skills when using R86TB.

The R86TB includes a state-of-the-art 3D monitor with display layouts created by RT3. The robot's movement can be visualized and checked in a 3D mode.

R32TB

Specifications		R86TB	R32TB
Compatibility		RV series/RH series	RV series/RH series
Functions		Operation, programming and monitoring of all robot functions	
Programming and monitoring		Read out information, also during operation; program editing with the easy edit function and templates for further efficient setup; visualization of setting areas on the 3D monitor screen; data analysis ways provided for troubleshooting	Read out information, also during operation, program editing with T9-Key standard, supervising of I/Os, display of error alarms, right-/left-Hand usage, 36 keys for operation selection
Software		Integrated operating system software with menu-based user interface	
Menu navigation (language)		English, Japanese, Chinese	English, Japanese
Display	type/dimensions	10,1" TFT display (800x1280 pixels)	Monochrome LCD graphic display (24 characters x 8 lines)
	technology	Touchscreen with backlight	LCD with backlight
Interfaces		USB, Ethernet for connection to the robot controller	RS422 for connection to the robot controller
Connection		Connected with the controller using a dedicated connector, Cable length: 7m	
Protection rating		IP65	
Weight	kg	1.2	0.9
Order information Art. no.		687249	214968

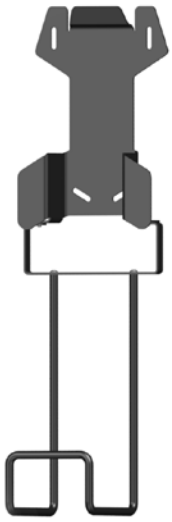

R86TB wall mount

Accessories	2F-TBSTS-01, 2F-TBEMGSTS-01	Wall Mount R86TB	Wall Mount R32TB
Application	TB-Safety box for EMG output signals of TB	Option for wall mount of TB with cable hanger	
Order information Art. no.	279057 683882	699067	274317

Force sensor

Force sensor set

With the force sensor, our RV series and RH series robots can be controlled to reach pre-set values of reaction force and softness when the robot contacts surrounding objects.

Features

- Function for controlling robots while applying a specified force
- Function for controlling the stiffness of robot appendages
- Function for changing control characteristics while the robot is running
- Function for acquiring force sensor and robot positions while contact made
- Function for display force sensor data and maintaining maximum values
- Function for acquiring force sensor information synchronized to position
- Information as log data and displaying it in graph form
- Allows logging start/stop commands to be specified in robot programs
- Function for transferring acquired log files to the FTP server

Specifications	4F-FS002H-W200	4F-FS002H-W1000
Robots	RV series/RH series	
Controller	CR800-D/R	
Max. static load (Fx, Fy, Fz / Mx, My, Mz)	200N/4Nm	1000N/30Nm
Set includes:	Force sensor, Force sensor interface unit, Sensor attachment adapter, Adapter cable for internal wiring, 24 V DC Power supply incl. 1 m cable, Serial cable between unit and sensor 5 m, SSCNET III cable 10 m	
Order information Art. no.	313064	313105

MELFA SafePlus

"MELFA SafePlus" safety technology for robot controllers

Functions like reduced safe speed control, safe limited control range, and safe torque monitoring are the main functions which can be activated via safety inputs, as a result, the robots can be easily integrated into safety systems.

Simple safety logic to control safety I/Os can be programmed in the robot controller without using a dedicated Safety PLC.

Specifications	4F-SF002-01	4F-SF003-05
Robots	RV series/RH series	RV series/RH series
Controller	CR800-D/R	CR800-D/R/Q/CR860-D/R
Redundant safety in-/ outputs	8 inputs/4 outputs	8 inputs/4 outputs
Order information Art. no.	313061	603944

Accessories	2F-SFDCIN-CBL02-OEM	2F-SFSDI-CBL02-OEM	2F-SFSDO-CBL02-OEM	2F-SFRIO-CBL05-OEM
Application	DCIN cable for 4F-SF002-01	SDI cable (1 safety input) for 4F-SF002-01	SDO cable (4 safety outputs) for 4F-SF002-01	RIO cable for 4F-SF002-01
Length m	2			5
Order information Art. no.	413838	413839	413840	470795

Internal/external wiring

Internal wiring/piping set for hand

This set consists of hand input cables and hoses that can be routed through the spindle until the end of the arm 2.

A bracket to fix the set on the arm 2 is included. The set can be used with an optional solenoid valve.

Specifications	1F-HS304S-01	1F-HS408S-01	1F-HS604S-01
Robots	RH-1FRHR/RH-3FRH	RH-6FRH	RH-12FRH/20FRH
Stroke mm	—	200	350
Length from the shaft end mm	300		400
Attachment	4 air hoses (Ø 3), 8 hand input cables (0.2 mm²) 2 power cables (0.3 mm²)	4 air hoses (Ø 4), 8 hand input cables (0.2 mm²) 2 power cables (0.3 mm²)	4 air hoses (Ø 6), 8 hand input cables (0.2 mm²) 2 power cables (0.3 mm²)
Remarks	Both ends are free. Eight reducers (Ø 3 to Ø 4) are attached. The robot arm side is connector (HC1, HC2), and one side is free.	Both ends are free. The robot arm side is connector (HC1, HC2), and one side is free.	
Weight kg	0.4		
Order information Art. no.	250468	250469	254396

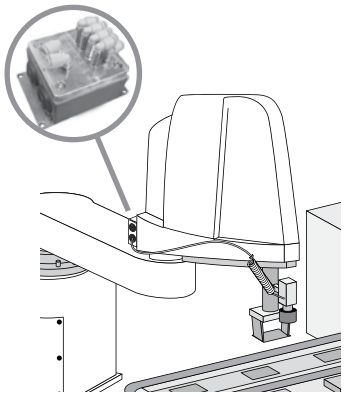

External wiring/piping box

With this option hand output and input cables and pneumatic hoses can be routed from the back of arm 2 to the spindle end outside the robot casing. Connections for connecting the external hoses and brackets for attaching the cables and hoses are included. The option can also be used for oil mist and cleanroom models. A bracket to fix the set on the arm 2 is included. The set can be used with an optional solenoid valve.

Specifications	1F-UT-BOX	1F-UT-BOX-01
Robots	RH-3FRH/6FRH	RH-12FRH/20FRH
Attachment	Eight air hoses (connect to solenoid valve) Installation screws (conical spring washer, plain washer)	
Weight kg	0.5	
Order information Art. no.	251104	254398

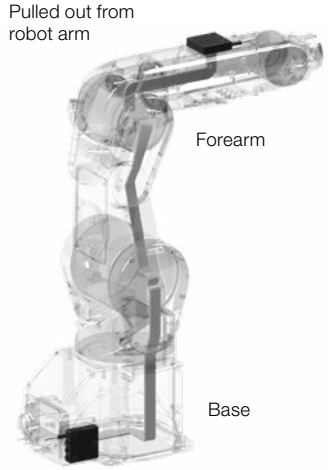

Forearm external wiring set/base external wiring set

With these options the hand input signal cables and the communication cables etc. can be led out of the bottom of the forearm and from the side of the base.

Use the recommended pairing in the table to led out the same cables on the arm side and at the base.

Specifications	1F-HB01S-01	1F-HA01S-01
Robots	RV-4FRL/7FR/7FRL/7FRLL/13FR/13FRL/20FR	
Part name	Forearm external wiring set	Base external wiring set
Hand input signal cable	8	—
Ethernet cable	1	
Additional cable	4	
Recommended pairing	●	
Order information Art. no	257936	257935

Solenoid valve sets

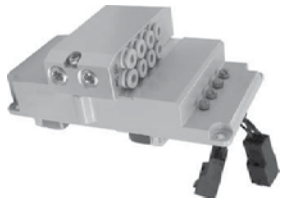

Solenoid gripper control valve sets

This option is used to control the gripper tool installed on the robot arm. The valve set comes with all the components required for installation, including the branch manifold, couplings and dampers.

The valves are fitted with plug-in control cables for quick and easy wiring. The solenoid valve sets are for use with oil-free compressed air.

Specifications	1F-VV0□E-01		1E-VD0□E	
	1	2	1	2
No. of valves	1	2	1	2
Range of use (robot type)	RH-1FHR		RV-2FR(B)/RV-2FRL(B)	
Valve function	Vacuum valve		Double solenoid	
Operating method	Two-stage ejector		Internal pilot method	
Effective sectional area (CV value)	1.5 mm		1.5 mm	
Operating pressure range	3–6 bar		2–7 bar	
Maximum pressure	10 bar		10 bar	
Response time	<2.5 ms at 24 V DC		<12 ms at 24 V DC	
Max. operating frequency	5 Hz		5 Hz	
Ambient temperature	-5–50 °C		-10–50 °C	
Coil rated voltage	24 V DC ±10 %		24 V DC ±10 %	
Order information Art. no.	277712	277713	47397	47398

Specifications	1S-VD0□E-05	1F-VD0□E-01				1S-VD0□E-01				1F-VD0□E-02				1F-VD0□E-03			
	4	1	2	3	4	1	2	3	4	1	2	3	4	1	2	3	4
No. of valves	4	1	2	3	4	1	2	3	4	1	2	3	4	1	2	3	4
Range of use (see page)	RH-3FRHR	RV-5AS (only 1 and 2 valves) RH-1FRHR, RH-3FRH, RH-6FRH				RH-12/RH-20FRH				RV-4FRL, RV-7FR, RV-7FRL				RV-13FR, RV-20FR			
Valve function	Double solenoid 5/2	Double solenoid 5/2				Double solenoid 5/2				Double solenoid 5/2				Double solenoid 5/2			
Operating method	Internal pilot method	Internal pilot method				Internal pilot method				Internal pilot method				Internal pilot method			
Effective sectional area (CV value)	0.64 mm	0.64 mm				0.64 mm				0.64 mm				0.64 mm			
Operating pressure range	1–7 bar	1–7 bar				1–7 bar				1–7 bar				1–7 bar			
Maximum pressure	10 bar	10 bar				10 bar				10 bar				10 bar			
Response time	<22 ms at 5 bar	<22 ms at 5 bar				<22 ms at 5 bar				<22 ms at 5 bar				<22 ms at 5 bar			
Max. operating frequency	5 Hz	5 Hz				5 Hz				5 Hz				5 Hz			
Ambient temperature	-10–50 °C	-10–50 °C				-10–50 °C				-10–50 °C				-10–50 °C			
Coil rated voltage	24 V DC ±10 %	24 V DC ±10 %				24 V DC ±10 %				24 V DC ±10 %				24 V DC ±10 %			
Order information Art. no.	238375	250470	250471	250472	250473	153057	153058	153059	153062	255281	255282	255283	255284	268829	268830	268831	268832

Bellows

Bellows

By adding the bellow to the Z axis, the IP protection can be increased to IP65 for the horizontal articulated robots RH-1FRHR, RH-6FRH, RH-12FRH, and RH-20FRH.

Bellow type	Robot type	Z-Axis length	Art. no.
1F-JS-21	RH-1FRHR	150 mm	277714
1F-JS-01	RH-6FRH	200 mm	251456
1F-JS-02	RH-6FRH	340 mm	251457
1F-JS-05	RH-12FRH	350 mm	255689
1F-JS-06	RH-12FRH	450 mm	255690
1F-JS-09	RH-20FRH	350 mm	255693
1F-JS-10	RH-20FRH	450 mm	255694

Interface boards for robot controllers

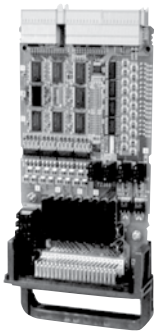

I/O interface

You can use 32 I/Os by adding the 2D-TZ378 interface module in one of the slots for your Optioncards.

By adding 2A-RZ371 slot-in cards you can increase the number of remote I/Os to 256 (depends on the controller model).

Specifications	2A-RZ371	2D-TZ378
Application	Interface for additional inputs/outputs	
Type	Decentralized I/O box with 32 inputs and 32 outputs	Slot-in card with 32 inputs and 32 outputs
Range of use	Only for D controller	
Rated load voltage	Inputs: 12 V/24 V; outputs: 12 V/24 V, max. 0.1 A/per output	
Max. no. of usable I/O boxes	7	2
Order information Art. no.	124658	218862

For I/O connection cables see page 54.

Profinet I/O / EtherCAT / EtherNet/IP interface

These interface cards make it possible to integrate the robot controller in a Profinet I/O, in an EtherCAT or in an Ethernet/IP network.

Specifications	2F-DQ535-PN-SET	2F-DQ535-ECT-SET	2D-TZ535-EIP-SET
Application	Profinet I/O	EtherCAT	EtherNet/IP
Range of use	Only for D controller		
Communications cable	Industrial Ethernet twisted pair cable		
Transmission speed	100 Mbit/s		
Number of I/O data	Max. 256 bytes send and max. 256 bytes receive		
Order information Art. no.	752992	413963	282409

CC-Link IE Field / CC-Link IE TSN interface

These interface cards make it possible to integrate the robot controller in the Ethernet based CC-Link IE Field or in a CC-Link IE TSN network for seamless integration.

Specifications	2F-DQ535-CCIEF-SET	2F-DQ535-CCIETSN-SET
Application	CC-Link IE Field	CC-Link IE TSN
Range of use	Only for D controller	
Communcation cable	Industrial Ethernet twisted pair cable	
Transmission speed	1 Gbit/s	1 Gbit/s / 100 Mbit/s
Number of I/O data	Max. 256 bytes send and max. 256 bytes receive	
Order information Art. no.	324560	751266

Profibus / CC-Link interface

These interface cards make it possible to integrate the robot controller in a Profibus network or in a CC-Link network.

Specifications	2D-TZ576	2D-TZ577
Application	CC-Link interface	Profibus DP interface
Range of use	Only for D controller	Only for D controller
Communications cable	Shielded 3-core twisted cable	Twisted pair cable
Communications distances	100 m at 10 Mbps, 150 m at 5 Mbps, 250 m at 2.5 Mbps, 600 m at 0.62 Mbps, 1500 m at 0.15 Mbps	1200 m at 9.6/19.2/93.75 Kbps, 1000 m at 187.5 Kbps, 400 m at 500 Kbps, 200 m at 1500 Kbps
Number of I/O data	Max. 896 points and 128 words send Max. 896 points and 128 words receive	Max. 122 words send Max: 122 Words receive Max. 192 Words total
Order information Art. no.	219063	218861

Gripper signal cables

Connection cables

A variety of different cables are available for connecting the control and status monitoring signals of the gripper tools.

When the pneumatic gripper is used you need to monitor the position of the gripper.

You should thus always connect a gripper signal input cable when you use the pneumatic gripper. One end of the cable set is fitted with a plug for the gripper's sensor signals. The other end is without connectors and can be wired as required for your system.

Hand output cable

Specifications	1E-GR35S	1F-GR35S-02	1F-GR60S-01	1S-GR35S-02	
Type	Hand signal output cable				Hand input-output cable
Range of use (robot type)	RV-2FR(B)/RV-2FRL(B)	RV-4FRL, RV-7FR/RV-7FRL/7FRLL, RV-13FR/13FRL, RV-20FR	RH-1FRHR, RH-3FRH/ RH-6FRH/RH-12FRH/ RH-20FRH	RH-3FRHR	RV-12CRL
Design	Single sided with connector				
Application	Custom-made magnetic valve set				
Length mm	350	500	1050	450	1000
Order information Art. no.	47391	255285	250467	166272	713770

Hand input cable

Specifications	1F-HC35C-01	1F-HC35C-02	1F-HC35S-02	1S-HC00S-01	1S-HC30C-11
Type	Hand signal input cable				
Range of use (robot type)	RH-1FRHR, RH-3FRH, RH-6FRH	RH-12FRH/RH-20FRH	RV-4FRL, RV-7FR, RV-7FRL/7FRLL, RV-13FR/13FRL, RV-20FR	RH-3FRHR	RV-2FR(B)/RV-2FRL(B)
Design	Single sided with connector				
Application	Monitoring of the gripper condition				
No. of cores	12		10	6	11
Length mm	1650	1800	1000	1210	300
Order information Art. no.	250474	254395	255286	238376	257063

Connectors

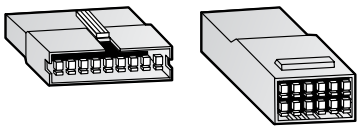

The connection to your system

Choose additional components to configure the optimal interface between the robot system and your application. The wide range of options makes it possible to configure the robot precisely for the individual requirements of your application.

The connectors listed in the following table can be used for making your own cables for the gripper input and output signals (see also the table above).

Specifications	RV-F / RV-FR Connector set	RH-FH / RH-FRH Connector set
Type	Connector set for OP1/2/3/4 & GR1/2 signals and LAN	Connector set for HC1/2 & GR1/2 signals
Range of use (robot type)	All MELFA RV-FR robots	All MELFA RH-FRH robots
Design	Complete set	
Shipping contents	Plug and contacts	
Order information Art. no.	268039	273182

Hand curl tube

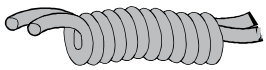

Replacement gripper hoses

These spiral hoses are for use with the pneumatic gripper. They are also suitable for use with cleanroom robots.

Specifications	1E-ST0404C	1E-ST0408C-300	1N-ST0608C-01	1S-ST0304S
Type	Spiral hose			
Range of use (robot type)	RV-2FR(B)/2FRL(B), RV-4FRL, RV-7FR/7FRL/7FRLL	RH-1FRHR, RH-3FRH/6FRH	RH-12FRH/20FRH, RV-13FR/20FR	RH-3FRHR
Application	For double pneumatic gripper	For quadruple pneumatic gripper		For double pneumatic gripper
Dimensions mm	4xØ 4	8xØ 4	8xØ 6	4xØ 3
Order information Art. no.	47389	270236	269556	238377

Machine cables for robots and controllers

Replacement cables for power and signal connections

These machine cables make it possible to decrease/increase the distance between the controller and the robot arm. Versions are available for either flexible and fixed routing of the cables between the controller and the robot arm.

Use the flexible versions for installation of the cables in drag chains and similar configurations. These cables replace the standard cables supplied with the robot or need to be ordered when the robot systems are ordered without machine cable (-SN Version).

Fixed installation

Specifications	1F-02UCBL-41	1F-03UCBL-42	1F-05UCBL-41	1F-10UCBL-41/-42/-43	1F-15UCBL-41/-42/-43	1F-20UCBL-41/-42/-43
Type	Replacement cable for a fixed installation					
Range of use (robot type)	RV-2FR, RV-2FRL, RV-4FRL, RV-7FR/7FRL/7FRLL, RV-13FR/13FRL, RV-20FR, RH-3FRHR, RH-6FRH, RH-12FRH, RH-20FRH, RV5-AS	RH-3CRH/6CRH	RRV-2FR, RV-2FRL, RV-4FRL, RV-7FR/7FRL/7FRLL, RV-13FR/13FRL, RV-20FR, RH-3FRHR, RH-6FRH, RH- 12FRH, RH-20FRH, RV5-AS	-41: RV-2FR, RV-2FRL, RV-4FRL, RV-7FR/7FRL/7FRLL, RV-13FR/13FRL, RV-20FR, RH-3FRHR, RH-6FRH, RH-12FRH, RH-20FRH, RV5-AS -42: RH-3CRH/6CRH -43: RV-8CRL		
Minimum bending radius	More than 150 mm					
Protection rating	Oil-proof specification sheath					
Length m	2	3	5	10	15	20
Art. no.	325730	504046	410994	313106/504047/492800	313107/504048/492801	327863/504049/492892

Flexible installation

Specifications	1F-10LUCBL-41/-42/-43/-45	1F-15LUCBL-41/-42/-43/-45	1F-20LUCBL-41/-42/-43/-45
Type	Replacement cable for a flexible installation in a drag chain		
Range of use (robot type)	-41: RV-2FR, RV-2FRL, RV-4FRL, RV-7FR/7FRL/7FRLL, RV-13FR/13FRL, RV-20FR, RH-3FRHR, RH-6FRH, RH-12FRH, RH-20FRH -42: RH-3CRH/6CRH -43: RV-8CRL -45: RH-10CRH/20CRH		
Minimum bending radius	More than 100 mm		
Cable bear isovolumetric ration	≤50 %		
Max. movement speed	2000 mm/s		
Guidance of life count	7.5 million times		
Protection rating	Oil-proof specification sheath		
Length m	10	15	20
Order information Art. no.	313108/504050/492893/732983	313109/504515/492894/732983	327864/504516/492895/732984

Connection cables, controller protection box, batteries

Connection cables for PCs and inputs/outputs

Connection cables, connectors

The MR-J3USBCBL3M cable is for establishing an USB connection between the robot controller and a personal computer.

The I/O connection cable is for connecting peripherals to the parallel I/O interface.

One end of the cable is fitted with a connector for the controller's parallel I/O port. The other end is supplied without a connector so that you can connect the appropriate connectors for your equipment.

Specifications		MR-J3USB-CBL3M	2A-CBL05	2A-CBL15	2D-CBL05	2D-CBL15
Type		USB connection PC-controller	I/O cable for 2A-RZ371		I/O cable for 2D-TZ378	
Range of use		FR series	Only for D controller			
Design		Mini USB	Plug on one side			
Length	m	3	5	15	5	15
Order information	Art. no.	160229	47387	59947	218857	218858

Controller protection box (IP54)

The controller protection box for the control unit CR800 prevents the penetration of oil mist or other influences from the operating environment.

The front of the housing is equipped with a mode switch and a connector for the teaching box.

Specifications		CR800-MB
Type		Controller protection box
Application		Controller CR800
Dimensions (WxHxD)	mm	495x250x725
Order information	Art. no.	313062

Buffer batteries

Batteries

The backup batteries are used to maintain the encoder and memory power supply.

The number of batteries depends on the robot type. For the FR series, you can order the battery set directly.

Specifications		RH-FRH series	RV-FR series	Art. no.
MR-BAT6V1	Number	4		248692
Battery set RH-FRH/RV-FR		for RH-FRH series and RV-FR series consits of 4 pcs. MR-BAT6V1		327911

Automatic cable retraction system

The automatic cable retraction system MTPReel™ helps to keep work areas tidy.

It quickly and gently rewind the TB cable, helping operators save time as the device is clearly assigned to them, allowing them to focus on production.

Lengthy searches for the correct plug-in piece and potential operating errors due to incorrect combinations are avoided.

The open version uses the standard cable of the TB where the closed version has an 10m cable integrated for cable extension.

Specification	MTP-Reel open	MTP-Reel closed	
Cable type	Standard cable connection	Cable extension	
Cable length	-	10m	
Supported TB	R32TB / R56TB / R86TB	R56TB	R86TB
Order Information	614722	614711	796332

Options overview for all robots

Option	Marking	RV-2FR(B)/ RV-2FRL(B)	RV-4FRLM	RV-7FRM/ RV-7FRLM RV-7FRLLM	RV-13FRM/ RV-13FRLM/ RV-20FRM /RV-20FRLM	RV-5AS	RV-8CRL	RH-12CRL	RH-3FRH	RH-6FRH	RH-12FRH/ RH-20FRH	RH-1FRHR	RH-3FRHR	RH-3CRH/ RH-6CRH/	RH-10CRH/ RH-20CRH	Art. no.	See Page
Teaching Box	R32TB	•	•	•	•	•	•	•	•	•	•	•	•	•	•	214968	60
Teaching Box	R86TB	•	•	•	•	•	•	•	•	•	•	•	•	•	•	687249	60
EMG-Output for TB_EMB	2F-TBSTS-01	•	•	•	•	•	•	•	•	•	•	•	•	•	•	279057	—
Force sensor	4F-FS002H-W200	•	•	•	•	•	•	•	•	•	•	•	•			313064	61
	4F-FS002H-W1000	•	•	•	•		•	•	•	•	•	•	•			313105	61
2-piece force sensor conversi-on cable set	1F-ASSISTA-ADCBL					•										504043	—
Vision sensor mounting bracket	1F-ASSISTA-2DVSFLG					•										504044	—
MELFA SafePlus	4F-SF002-01	•	•	•	•		•	•	•	•	•	•	•	•	•	313061	61
MELFA SafePlus II Slim	4F-SF003-05	•	•	•	•		•	•	•	•	•	•	•	•	•	603944	61
MELFA Smart Plus card	2F-DQ521	•	•	•	•		•	•	•	•	•	•	•	•	•	486380	65
Quadruple valve set	1S-VD04E-05												•			238375	64
Single valve set	1E-VD01E	•														47397	64
Double valve set	1E-VD02E	•														47398	64
Single valve set	1F-VD01E-01					•		•	•	•		•				250470	64
Double valve set	1F-VD02E-01					•		•	•	•		•				250471	64
Triple valve set	1F-VD03E-01							•	•	•		•				250472	64
Quadruple valve set	1F-VD04E-01							•	•	•		•				250473	64
Single valve set	1F-VD01E-02		•	•												255281	64
Double valve set	1F-VD02E-02		•	•												255282	64
Triple valve set	1F-VD03E-02		•	•												255283	64
Quadruple valve set	1F-VD04E-02		•	•												255284	64
Single valve set	1F-VD01E-03				•											268829	64
Double valve set	1F-VD02E-03				•											268830	64
Quadruple valve set	1S-VD04E-01										•					153065	64
Single vacuum valve set	1F-VV01E-01											•				277712	64
Double vacuum valve set	1F-VV02E-01											•				277713	64
Bellows	1F-JS-21											•				277714	64
	1F-JS-01									•						251456	64
	1F-JS-02									•						251457	64
	1F-JS-05										•					255689	64
	1F-JS-06										•					255690	64
	1F-JS-09										•					255693	64
	1F-JS-10										•					255694	64
CC-Link interface [1]	2D-TZ576	•	•	•	•	•	•	•	•	•	•	•	•	•	•	219063	65
CC-Link IE Field interface [1]	2F-DQ535-CCIEF-SET	•	•	•	•	•	•	•	•	•	•	•	•	•	•	324560	65
CC-Link IE TSN	2F-DQ535-CCIETSN-SET	•	•	•	•	•	•	•	•	•	•	•	•	•	•	751266	65
Profibus interface [1]	2D-TZ577	•	•	•	•	•	•	•	•	•	•	•	•	•	•	218861	65
EtherCat interface [1]	2F-DQ535-ECT-SET	•	•	•	•	•	•	•	•	•	•	•	•	•	•	413963	65
Profinet interface [1]	2F-DQ535-PN-SET	•	•	•	•	•	•	•	•	•	•	•	•	•	•	752992	65
Ethernet/IP interface [1]	2D-TZ535-EIP-SET	•	•	•	•	•	•	•	•	•	•	•	•	•	•	282409	65
I/O interface [1]	2D-TZ378	•	•	•	•	•	•	•	•	•	•	•	•	•	•	218865	65
	2A-RZ371	•	•	•	•		•	•	•	•	•	•	•	•	•	124658	65
Hand signal output cable	1E-GR35S	•														47391	66
	1F-GR35S-02		•	•	•											255285	66
	1F-GR60S-01							•	•	•	•	•				250467	66
	1S-GR35S-02												•			166272	66
Hand signal input cable	1F-HC35C-01							•	•	•		•				250474	66
	1F-HC35C-02										•					254395	66
	1F-HC35S-02		•	•	•											255286	66
	1S-HC00S-01												•			238376	66
	1S-HC30C-11	•														257063	66
Connector sets	RH-FRH Hand connector set							•	•	•	•	•	•			273182	66
	RV-F/RV-FR connector set		•	•	•											268039	66

Options overview for all robots

Option	Marking	RV-2FR(B)/ RV-2FRL(B)	RV-4FRLM	RV-7FRM/ RV-7FRLM RV-7FRLLM	RV-13FRM/ RV-13FRLM/ RV-20FRM /RV-20FRLM	RV-5AS	RV-8CRL	RV-12CRL	RH-3FRH	RH-6FRH	RH-12FRH/ RH-20FRH	RH-1FRHR	RH-3FRHR	RH-3CRH/ RH-6CRH/	RH-10CRH/ RH-20CRH	Art. no.	See Page
Hand curl tube	1E-ST0404C	•	•	•												47389	67
	1E-ST0408C-300								•	•		•				270236	67
	1S-ST0304S												•			238377	67
	1N-ST0608C-01				•						•					269556	67
Internal wiring and piping set	1F-HS304S-01								•			•				250468	63
	1F-HS408S-01									•						250469	63
	1F-HS604S-01										•					254396	63
External wiring/ piping box	1F-UT-BOX								•	•						251104	63
	1F-UT-BOX-01										•					254398	63
Forearm external wiring set	1F-HB01S-01		•	•	•											257936	63
Base external wiring set	1F-HA01S-01		•	•	•											257935	63
Replacement cable for fixed installation	1F-02UCBL-41	•	•	•	•	•			•	•	•	•	•			325730	58
	1F-10UCBL-41	•	•	•	•	•			•	•	•	•	•			313106	67
	1F-15UCBL-41	•	•	•	•	•			•	•	•	•	•			313107	67
	1F-20UCBL-41	•	•	•	•	•			•	•	•	•	•			327863	67
	1F-03UCBL-42													•		504046	67
	1F-10UCBL-42													•		504047	67
	1F-15UCBL-42													•		504048	67
	1F-20UCBL-42													•		504049	67
	1F-10UCBL-43						•	•								492800	67
	1F-15UCBL-43						•	•								492801	67
	1F-20UCBL-43						•	•								492892	67
Replacement cable for flexible installation in a drag chain	1F-10LUCBL-41	•	•	•	•				•	•	•	•	•			157582	67
	1F-15LUCBL-41	•	•	•	•				•	•	•	•	•			313109	67
	1F-20LUCBL-41	•	•	•	•				•	•	•	•	•			327864	67
	1F-10LUCBL-42													•		504050	67
	1F-15LUCBL-42													•		504515	67
	1F-20LUCBL-42													•		504516	67
	1F-10LUCBL-43						•	•								492893	67
	1F-15LUCBL-43						•	•								492894	67
	1F-20LUCBL-43						•	•								492895	67
	1F-10LUCBL-45														•	732982	67
	1F-15LUCBL-45														•	732983	67
	1F-20LUCBL-45														•	432982	67
PC connection cable USB	MR-J3USBCBL3M	•	•	•	•	•	•	•	•	•	•	•	•	•	•	160229	68
Connection cable for I/O interface [1]	2A-CBL05	•	•	•	•	•	•	•	•	•	•	•	•	•	•	47387	68
	2A-CBL15	•	•	•	•	•	•	•	•	•	•	•	•	•	•	59947	68
	2D-CBL05	•	•	•	•	•	•	•	•	•	•	•	•	•	•	218857	68
	2D-CBL15	•	•	•	•	•	•	•	•	•	•	•	•	•	•	218858	68
Controller protection box (IP54)	CR800-MB	•	•	•	•	•	•	•	•	•	•	•	•	•	•	313062	68
Wall mount	R32TB wall mount	•	•	•	•	•	•	•	•	•	•	•	•	•	•	274317	60
Wall bracket	R86TB wall bracket	•	•	•	•	•	•	•	•	•	•	•	•	•	•	696465	60

MELFA-BASIC programming

Easy-to-Learn MELFA-BASIC Programming language

Mitsubishi Electric robots are controlled with programs written in the powerful MELFA BASIC programming language. In addition to the familiar standard BASIC instructions and constructs like FOR … NEXT and GOTO, MELFA BASIC also has some extensions required for robots, including additional data types, instructions for movement and gripper control and I/O instructions. The familiarity of standard BASIC makes it easy for beginners to get started with robot programming.Despite its simplicity and short learning curve, MELFA BASIC is a powerful language that can be used to create very complex robot programs MELFA BASIC VI allows structured programming with functions and re-use code and ready-made libraries are additionally improving the reusability and readability.

Programming

Robot programs are written with the MELFA BASIC instructions with the help of a PC and the teaching box. The positions are defined with the teaching box and the actual program is written on the PC.

Programs are written using the RT Toolbox3 programming and project managing software for industrial robots. You can find more information about the programming software on the following pages.

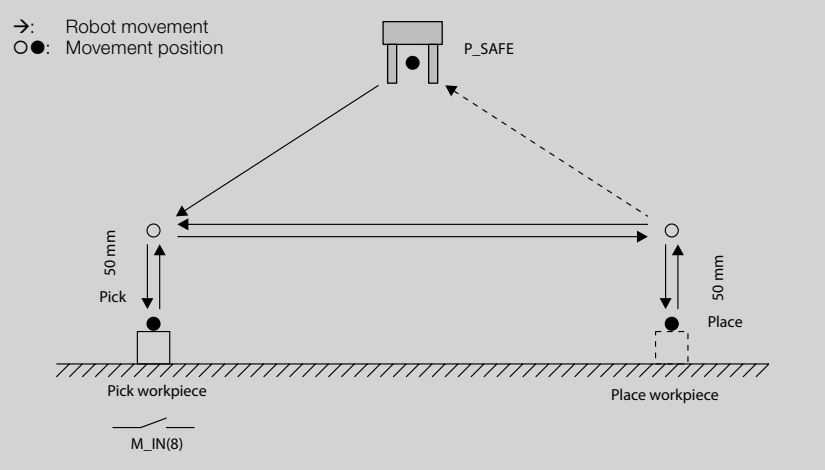

Sample program

The sample program below is for a pick-and-place operation. The input signal M_IN(8) tells the program that there is a workpiece in position Pick. When a work-piece is present the input signal is set to 1 and the pick-and-place operation is performed. The workpiece is picked up from position Pick and deposited in position Place. If no workpiece is present the robot remains in the retracted position P_SAFE.

Pick-and-Place Program

1	MVS P_SAFE	Move to safe position
2	Wait M_IN(8) = 1	Wait until input bit 8 is set
3	HOPEN 1	Open gripper 1
4	*PickPlace	Jump-Destination “PickPlace”
5	MVS Pick, -50	Move longitudinally to a position 50 mm from “Pick” relative to the tool Z-direction
6	MVS Pick	Move to position “Pick”
7	HCLOSE 1	Close gripper 1
8	DLY 0.2	Wait for 0.2 s to ensure proper closing of gripper
9	MVS Pick, -50	Move longitudinally to a position 50 mm from “Pick” relative to the tool Z-direction
10	MVS Place, -50	Move longitudinally to a position 50 mm from “Place” relative to the tool Z-direction
11	MVS Place	Move to position “Place”
12	HOPEN 1	Open gripper 1 and deposit workpiece
13	DLY 0.2	Wait for 0.2 s to ensure proper opening of gripper
14	MVS Place, -50	Move longitudinally to a position 50 mm from “Place” relative to the tool Z-direction
15	IF M_IN(8) = 1 THEN GOTO *PickPlace	If another workpiece is present repeat the pick-and-place operation
16	MVS P_SAFE	If no workpiece is present return to safe position and end program
17	END	Program end

RT ToolBox3

RT ToolBox3 is a software for program creation and total engineering support. This PC software supports everything from system startup to debugging, simulation, maintenance and operation. This includes programming and editing, operational checking before robots are installed, measuring process tact time, debugging during robot startup, monitoring robot operation after startup, and troubleshooting.

- Compatible with Windows® 11.
- Support of all MELFA robots
- Support for all processes, from programming and startup to maintenance
- Enhanced simulation functions
- Advanced maintenance functions
- Extended documentation function

Enhanced RT ToolBox3 visual functions

- Set parameters can be displayed visually to prevent setting errors.
- Display of teaching positions and trajectories of end-points.
- Hands can be created and then attached to the robot.
- 3D polygonal models can be imported into the program. (Applicable 3D data file formats: STL, OBJ)

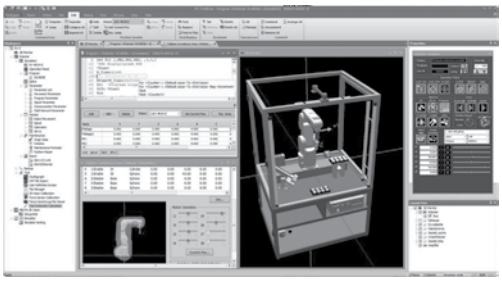

Linked to iQ Works2

- Integrated Software Suite Consists of GX Works3, MT Works2, GT Works3, RT ToolBox3 and FR Configurator2, which are programming software for each respective product
- System management software MELSOFT Navigator is the central system configuration incorporating an easy-to-use, graphical user interface with additional project-sharing features such as system labels and parameters.

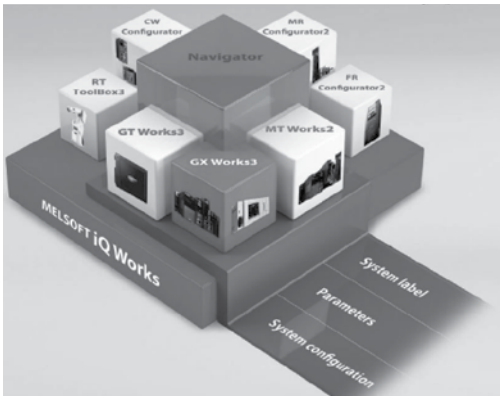

Program editing and debugging functions

Creation of programs in MELFA-BASIC IV/V/VI languages.* Improvement of work operations by a multi-window format and the various editing functions. This is helpful for use in checking operations such as the execution of program steps, setting of breakpoint settings, and other tasks.

* MELFA-BASIC is a programming language that further expands upon and develops the commands needed for robot control.
In MELFA-BASIC, the expansion of the command as well as parallel processing or structuring that were difficult to realize in BASIC language can make it possible to operate MELFA easily.

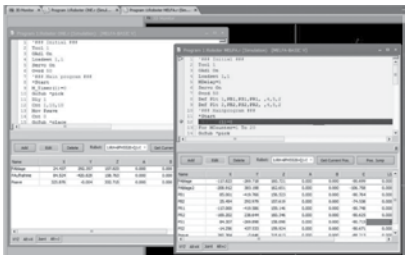

Simulation functions

Offline robot motion and tact time check for designated parts of a program.

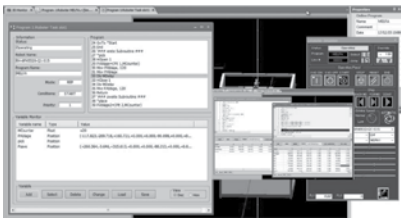

3D viewer

Graphical representation of a work along with the dimensions, color and other specified details of the work area to be gripped.

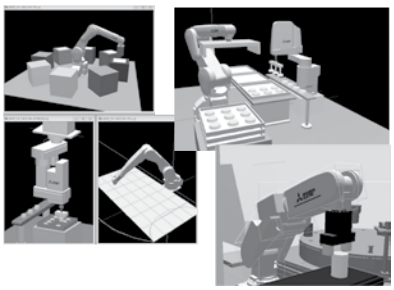

Monitor functions

This is used to monitor program execution status and variables, input signals, etc.)

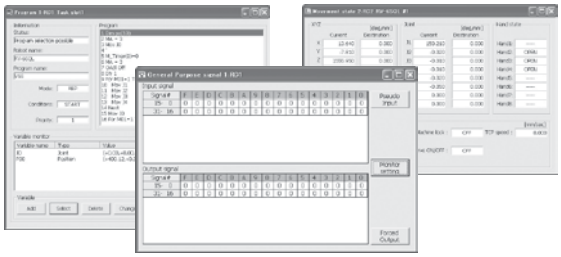

Maintenance functions

These functions include maintenance forecast, position recovery support, parameter management, etc.

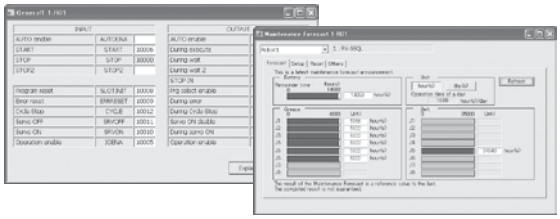

■ RT ToolBox3 Pro

A 3D robot simulator offers powerful support for system design and preliminary layout.

RT ToolBox3 Pro offers an add-in tool [1] for SolidWorks [2] used for robot simulation in production systems on PC's converting processing paths of workpieces into robot position data. Adding RT ToolBox3 Pro into the SolidWorks platform adds to and expands on the robot simulation functions.

- Loading of part data from peripheral created in SolidWorks® devices and rearrangement
- Installation of hands by CAD files
- Handling of workpieces
- Creating operation data from 3D CAD source data
- Offline teaching in 3D CAD surrounding
- Creation of robot programs (template) Workflow processes can be created using a combination of the offline teaching and CAD link functions and then converted into robot programs. (MELFA-BASIC IV, V, VI format)
- Simulation of robot operations
- Display of the robot movement path in the application/the workspace
- Interference checks between the robot and peripheral devices
- Saving simulated movements to video files (AVI format)
- Measurement of cycle times
- Robot program debugging functions
- Jog function – teaching the robot
- Installation of a traveling axis to verify the operation of the system equipped with this.
- Calibration of point sequence data of CAD coordinates and robot coordinate data

[1] An add-in tool is a software program that adds certain functions to application software packages.
[2] SolidWorks® is a registered trademark of SolidWorks Corp, (USA).

Automatic robot program creation function

The teaching position data and robot operation programs necessary for operating robots can be generated automatically by simple loading of 3D CAD data[3] for the applicable works into SolidWorks® and then setting of processing conditions and areas using RT ToolBox3 Pro.

[3] Formats that can be loaded into SolidWorks®

- IGES
- STEP
- ParasolidR
- SAT (ACISR)
- Pro/ENGINEERR
- CGR (CATIARgraphics)
- Unigraphics
- PAR (Solid Edge TM)
- IPT (Autodesk Inventor)
- DWG
- DXFTM
- STL
- VRML
- VDA-FS
- Machanical Desktop
- CADKEYR
- Viewpoint
- RealityWave
- HOOPS
- HCG (Highly compressed graphics)

Note: Check the SolidWorks website and other published documents for the latest specifications.

Example screens for RT ToolBox3 Pro

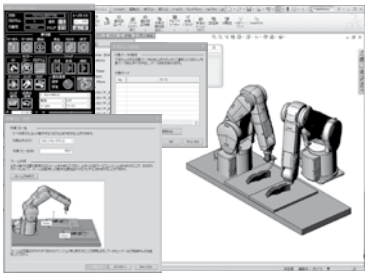

■ RT VisualBox

ASSISTA and the camera capture the target using the "RT VisualBox" auto-focus function.

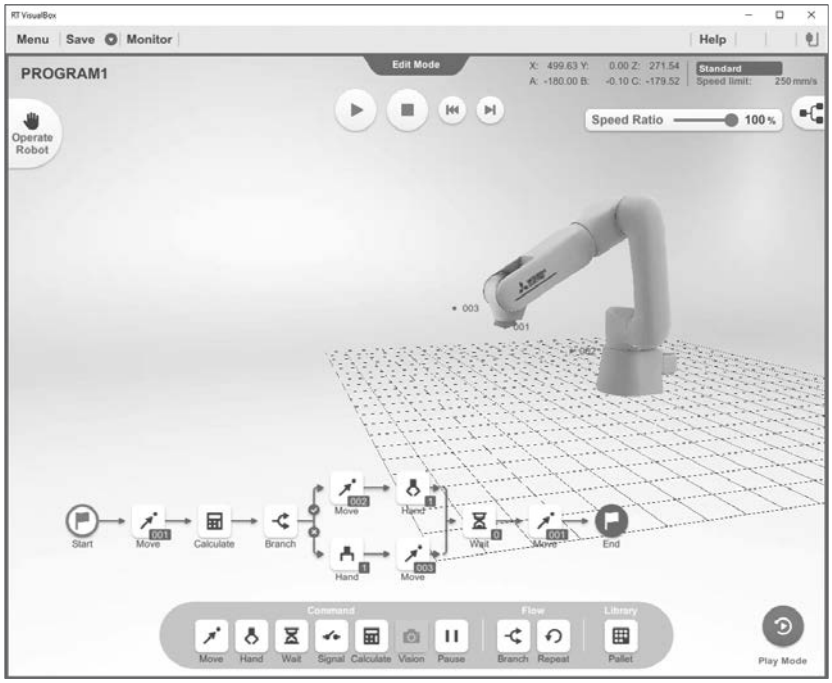

"RT VisualBox" proprietary engineering tool

The RT VisualBox programming tool developed by Mitsubishi Electric is a visual programming software for MELFA ASSISTA. Intuitive flowchart programming makes it easy to create programs by simply drag-and-drop blocks, requiring only the parameters for the functions to be set. No robot programming knowledge is need to get MELFA ASSISTA working. You can simulate the operation without hardware being installed. A set-up wizard provides operators with an easier more intuitive methodology for peripherals configurations.

Example screens for RT VisualBox

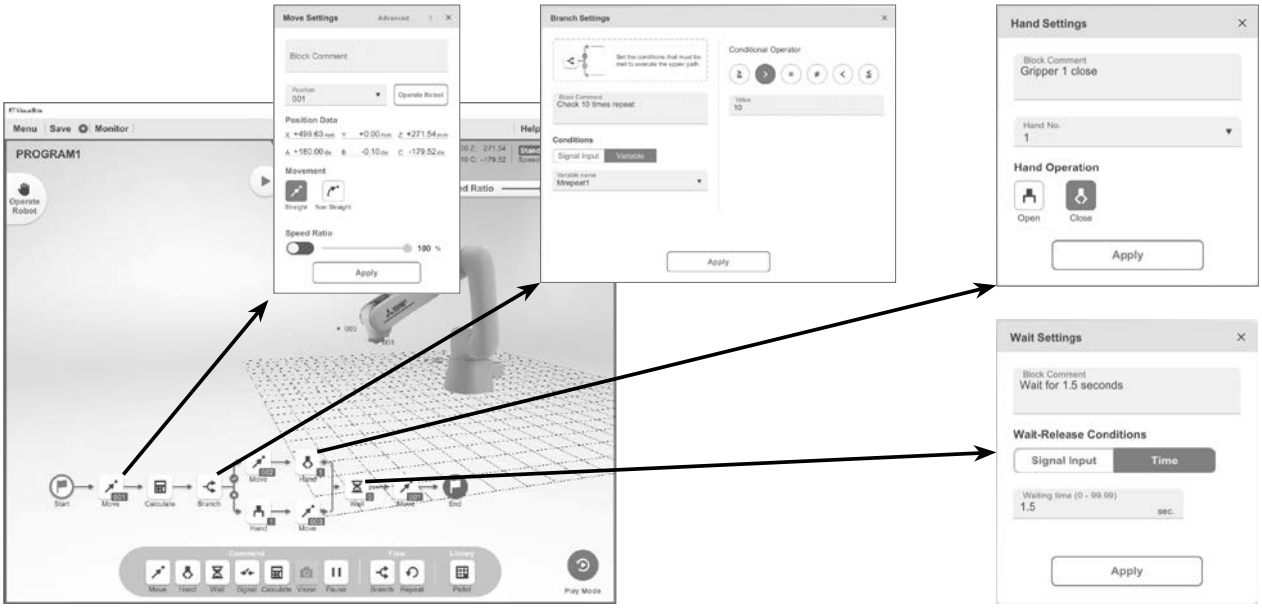

3D simulation software MELSOFT Gemini

MELSOFT Gemini is a 3D simulation software to virtually model machines and manufacturing processes.

It is a perfect software solution for:

- Layout planning
- Production/operation flow simulation
- Robot programming and cell design
- Virtual commissioning
- Enabling digital twins

Manufacturing with Visible "Results" Before Launch

Digital transformation demands faster planning-to-launch, but rework and start-up fixes from development issues—and unclear investment impact—slow down decisions and timelines.

Line simulation capabilities for humans, robots, and Automated Guided Vehicles (AGVs). Our innovative technology enables dynamic simulations of complex flow lines and operational scenarios with unparalleled accuracy and efficiency.

Flexible solution for equipment simulations of mechanical interference in 3D space, seamless integration with control devices for advanced logic validation, and real-time reproduction of error occurrences in immersive 3D environments based on logged data.

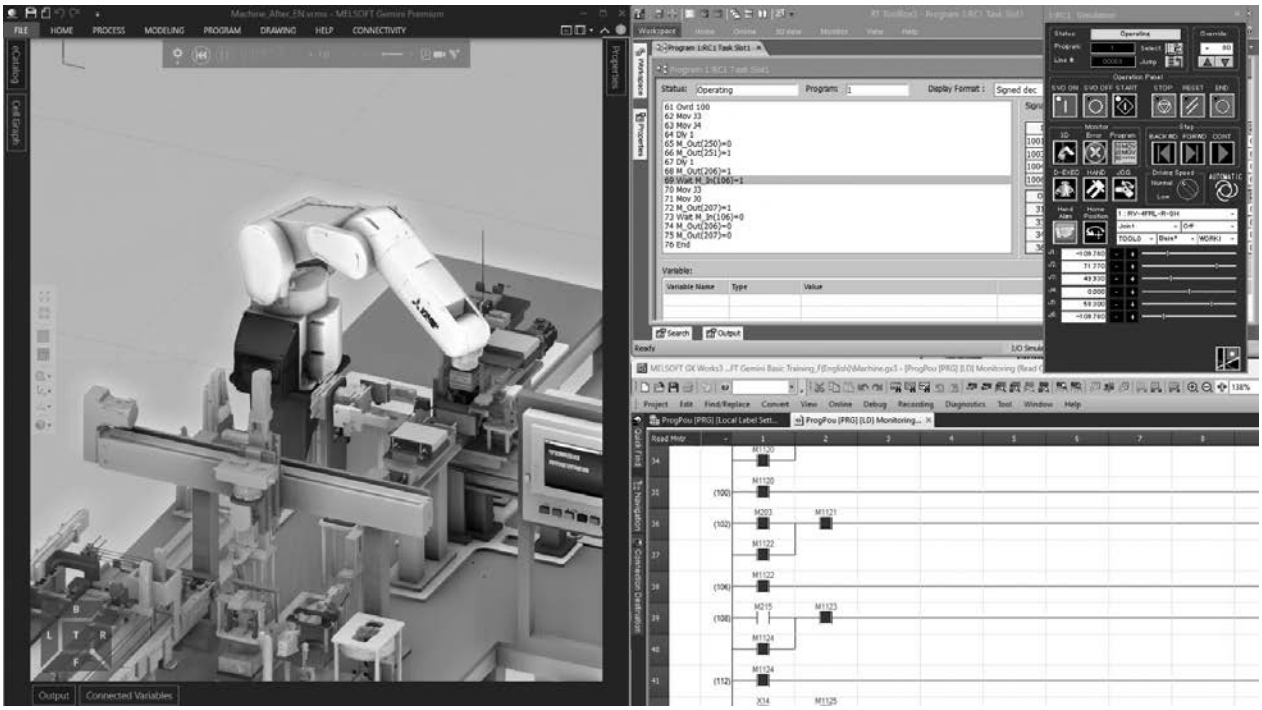

Digital Solutions platform GENESIS

GENESIS is an advanced digital platform used for both traditional Supervisory Control and Data Acquisition (SCADA) applications and a wide range of information-centric projects involving operational technology, industrial control systems, and building management systems.

Built for deployment flexibility, the platform enables rapid, scripless application development and seamless scaling—from single-node setups to distributed, high-availability architectures for mission-critical operations.

- Certified design aligned with Mitsubishi Electric Iconics Digital Solutions IEC 62443-4-1 Security Development Lifecycle Assurance (SDLA) certification
- Unified redundancy capabilities for improved resilience
- Integrated platform features, including process historian, asset structures, and alarm and reporting capabilities
- Simplified, flexible licensing model with unlimited clients and tag
- Entry-level HMI version for machine-related visualization
- Flexible application scaling from on-premise to cloud-based

AI-driven visual inspection software MELSOFT VIXIO

MELSOFT VIXIO is a software that performs visual inspection in coordination with cameras.

This solution addresses three critical challenges that manufacturers face today: the increasing burden on quality control from inspectors due to labour shortages, inconsistent inspection results caused by generational shifts in the workforce, and the limitations of traditional rule-based inspection systems.

Key features include:

- High-speed, high-precision AI ideal for factory automation
- Simple operation settings an AI model generation that require no knowledge or programming expertise
- Improved traceability for enhanced monitoring and control across production
- Works with your set up of choice - MELSOFT VIXIO works with many kinds of IPC, Graphic Cards or Cameras

Index

A

Accessories

Batteries 68
Bellows 64
Connection cables for PCs and inputs/outputs, connectors. 68
Connectors 66
Controller protection box 68
Force sensor 62
Gripper signal cables. 66
Hand curl tube 67
Interface boards 65
Machine cables for robots and controllers 67
MELFA SafePlus. 62
Solenoid valve sets. 64
Teaching box 61
Wiring 63

C

Controller 58

D

Dimensions

Controller 58
RH-1FRHR 48
RH-3FRHR 50
RH-CRH 56
RH-FRH 52
RV-2FR(L)(B) 34
RV-4FRLM 36
RV-5AS-D 44
RV-7FRM/7FRLM/7FRLLM. 38
RV-8CRL/RV-12CRL. 46
RV-13FRM/RV-13FRLM/RV-20FRM/ RV-20FRLM-SC771 . 40
RV-35FR/50FR/80FR 42

M

Movement ranges

RH-1FRHR 48
RH-3FRHR 50
RH-CRH 56
RH-FRH 52
RV-2FR(L)(B) 34
RV-4FRLM 36
RV-5AS-D 44
RV-7FRM/7FRLM/7FRLLM. 38
RV-8CRL/RV-12CRL. 46
RV-13FRM/RV-13FRLM/RV-20FRM/ RV-20FRLM-SC771 . 40
RV-35FR/50FR/80FR 42

O

Options overview for all robots . . 70

Overview robots

Horizontal articulated robots (RH) 17
Mitsubishi Electric robot "ASSISTA". 18
Model designation 19, 20
Vertical articulated robots (RV). 19

P

Programming language

MELFA-BASIC programming 72

R

Robot for collaborative applications

RV-5AS-D 43

S

SCARA robots

RH-1FRHR 47
RH-3FRHR 49
RH-CRH 54
RH-FRH 51

Software

RT ToolBox3 73
RT ToolBox3 Pro. 74
RT VisualBox. 75

Standard high end functions

Adaptation to operation. 24
CC-Link IE Field Network Basic function 26
Collision avoidance. 26
Connection to peripheral devices 25
Coordinated control 26
Full use of installation space 22
GOT terminals. 31
High accuracy 24
Intelligent technology 27
iQ Platform 31
MELFA SafePlus features 30
Predictive maintenance function. 29
Shortened takt times 22
Tooling performance. 22
User friendliness 23

System configuration 57

V

Vertical articulated arm robots

RV-2FR(B)/RV-2FRL(B) 33
RV-4FRLM 35
RV-7FRM/7FRLM/7FRLLM. 37
RV-8CRL/12CRL. 45
RV-13FRM/RV-13FRLM/RV-20FRM /20FRLM-SC771 39
RV-35FR/50FR/80FR 41

Creating Solutions Together.

Low-voltage Power Distribution Products

Transformers, Med-voltage Distribution Products

Power Monitoring and Energy Saving Products

Power (UPS) and Environmental Products

Compact and Modular Controllers

Servos, Motors and Inverters

Visualization: HMIs

Edge Computing Products

Numerical Control (NC)

Robots for collaborative applications and Industrial Robots

Processing machines: EDM, Lasers

SCADA, analytics and simulation software

Mitsubishi Electric's product lineup, from various controllers and drives to energy-saving devices and processing machines, all help you to automate your world. They are underpinned by software, innovative data monitoring, and modelling systems supported by advanced industrial networking and Edgecross IT/OT connectivity. Together with a worldwide partner ecosystem, Mitsubishi Electric factory automation (FA) has everything to make IoT and Digital Manufacturing a reality.

With a complete portfolio and comprehensive capabilities that combine synergies with diverse business units, Mitsubishi Electric provides a one-stop approach to how companies can tackle the shift to clean energy and energy conservation, carbon neutrality and sustainability, which are now a universal requirement of factories, buildings, and social infrastructure.

We at Mitsubishi Electric FA are your solution partners waiting to work with you as you take a step toward the realization of sustainable manufacturing and society through the application of automation.
Let's automate the world together!

Note: not all products are available in all countries

European Offices

Germany **Mitsubishi Electric Europe B.V.** Mitsubishi-Electric-Platz 1 D-40882 Ratingen Phone: +49 (0)2102 / 486-2048	**Czech Republic** **Mitsubishi Electric Europe B.V.** Pekařská 621/7 CZ-155 00 Praha 5 Phone: +420 734 402 587	**France** **Mitsubishi Electric Europe B.V.** 2, rue de l'Union F-92565 Rueil Malmaison cedex Phone: +33 1 41 02 83 00	**Greece** **Mitsubishi Electric Europe B.V.** 3 Konitsis street & 90 Kiffisias Ave Maroussi 15125, Greece Phone: +30 2106140050	**Hungary** **Mitsubishi Electric Europe B.V.** Budaörs Office Park, Builidng A, 3rd Floor, Szabadság street 117 HU-2040 Budapest Phone: +36 70 3322 372
Ireland **Mitsubishi Electric Europe B.V.** Westgate Business Park, Ballymount IRL-Dublin 24 Phone: +353 (0)1 4198800	**Italy** **Mitsubishi Electric Europe B.V.** Campus Energy Park Via Energy Park 14 - 20871 Vimercate (MB) Phone: +39 039 / 60 53 1	**Netherlands** **Mitsubishi Electric Europe B.V.** Capronilaan 34 NL-1119 NS Schiphol-Rijk Phone: +31 (0) 297 250 350	**Poland** **Mitsubishi Electric Europe B.V.** ul. Krakowska 48 PL-32-083 Balice Phone: +48 (0) 12 347 65 00	**Romania** **Mitsubishi Electric Europe B.V.** 22, Tudor Vladimirescu Street, Floor 6, Office 4.2, District 5 – Bucharest Phone: +40 31 229 0840
Slovakia **Mitsubishi Electric Europe B.V.** Levická 7 SK-949 01 Nitra Phone.: +421 917 624036	**Spain** **Mitsubishi Electric Europe B.V.** Carretera de Rubí 76-80 Apdo. 420 E-08190 Sant Cugat del Vallés (Barcelona) Phone: +34 (0) 93 / 5653131	**Sweden** **Mitsubishi Electric Europe B.V. (Scandinavia)** Hedvig Möllers gata 6 SE-223 55 Lund Phone: +46 (0) 8 625 10 00	**Turkey** **Mitsubishi Electric Turkey Elektrik Ürünleri A.Ş.** Serifali Mahallesi Kale Sokak No:41 TR-34775 Ümraniye-İSTANBUL Phone: +90 (216) 969 25 00	**UK** **Mitsubishi Electric Europe B.V.** Travellers Lane UK-Hatfield, Herts. AL10 8XB Phone: +44 (0)1707 / 28 87 80

Representatives

Algeria **MEC Casa ALGERIA** Cité Alghazel n.1 02000 Chlef – Algérie Phone: 021 327 798 069	**Austria** **GEVA** Wiener Straße 89 A-2500 Baden Phone: +43 (0)2252 / 85 55 20	**Bosnia and Herzegovina** **AM Pneumatik d.o.o.** Krecanska 15A/PP-1, SI-75000 Tuzla Phone: +387 35 364 430 Mobile: +387 61 101 582	**Bosnia and Herzegovina** **INEA RBT d.o.o.** Stegne 11 SI-1000 Ljubljana Phone: +386 (0)1/ 513 8116	**Bulgaria** **AKHNATON** 4, Andrei Ljapchev Blvd., PO Box 21, BG-1756 Sofia Phone: +359 (0)2/817 6000 Phone: +359 88 800 0061
Bulgaria **PM Electrical Ltd.** ulitsa Poruchik Nedelcho Bonchev 10, BG-1528 Sofia Phone: +359 87 827 6715	**Croatia** **INEA CR** Losinjska 4 a HR-10000 Zagreb Phone: +385 (0)1 / 36 940 - 01/ -02/-03	**Czech Republic** **SIMAP CZ s.r.o.** Nové sady 988/2 CZ-602 00 Brno Phone: +420 777 731 900	**Denmark** **HANS FØLSGAARD A/S** Theilgaards Torv 1 DK-4600 Køge Phone: +45 4320 8600	**Egypt** **TECHNYCON FOR SMART SOLUTION** 36 Sherif Basha Str, 1st floor, Flat 1, Abdeen, 11613 -Cairo, Egypt K.A. Mr. Hossam Sakr Mob: +20 122 23 17 541
Estonia **Electrobit OÜ** Suur-Sõjamäe 13a 11415, Tallinn Phone.: +372 6518 140	**Finland** **UTU Automation Oy** Peltotie 37 FIN-28400 Ulvila Phone: +358 (0)207 / 463 500	**Greece** **UTECO A.B.E.E.** 5, Mavrogenous Str. GR-18542 Piraeus Phone: +30 (0)211 / 1206-900	**Hungary** **MELTRADE Kft.** Fertő utca 14. HU-1107 Budapest Phone: +36 (0)1 / 431-9726	**Israel** **ILAN & GAVISH Ltd.** 24 Shenkar St., Kiryat Arie IL-49001 Petah-Tikva Phone: +972 (0)3 / 922 18 24
Israel **SHERF MOTION TECHNOLOGIES LTD** Haprat Street 2, Entrance A 2 floor 8122702 Yavne-Israel	**Latvia** **SIA OAK Integrator Products** Mežkalna iela 5, Rīga LV-1058	**Lithuania** **Automatikos centras** Pramonės pr. 17H, 51327 Kaunas, Lithuania tel:+37037262707	**Macedonia** **RADE KONCAR-TEP** 3rd Macedonian Brigade Blvd, MK-1000 Skopje Phone: +389 2 2402 481	**Malta** **ALFATRADE Ltd.** 99, Paola Hill Malta-Paola PLA 1702 Phone: +356 (0)21 / 697 816
Morocco **SCHIELE MAROC SA** Nouvelle Route Rabat KM 7.2 20600 Ain Sebaa Casablanca	**Norway** **MITSUBISHI ELECTRIC EUROPE B.V. (SCANDINAVIA)** Factory Automation Dronninggata 15, 3019 Drammen Phone: +47 915 02 650	**Poland** **Enel – Dystrybucja Sp. z o.o.** Józefa Sowińskiego 3, 44-101 Gliwice Phone: (+48) 32 237 61 80	**Poland** **MECON Sp. z o.o.** Xenon Business Park Śląska 53, 81-304 Gdynia Phone: +48 58 620 85 40 Mobile: +48 609 394 959	**Poland** **PG SYSTEMS Sp. z o.o.** Macieja Rataja 12, 05-070 Sulejówek Phone: +48 (22) 499 57 26 Mobile: +48 501 380 073
Portugal **Fonseca S.A.** R. João Francisco do Casal 87/89 PT-3801-997 Aveiro, Esgueira Phone: +351 (0)234 / 303 900	**Romania** **Sirius Trading & Services SRL** Aleea Lacul Morii Nr. 3 RO-060841 Bucuresti, Sector 6 Phone: +40 (0)21 / 430 40 06	**Serbia** **INEA SR d.o.o.** Batajnički drum 10. deo 1b 11080 Zemun, Beograd Republika Srbija info@inea.rs	**Serbia** **Venting d.o.o.** Beblerjev trg 3, RS-1000 Ljubljana Phone: +386 (059) 017 465 Mobile: +386 (0)51 415 116	**Serbia** **VitaELKO d.o.o.** Vojvođanska 165, RS-22304 Novi Banovci Phone: +381 22/343-197; +381 22/343-198 Phone: +381 22/341-452; +381 22/342-790;
Slovakia **SIMAP SK** Dolné Pažite 603/97 SK-911 06 Trenčín Phone: +421 (0)32 743 04 72	**Slovenia** **INEA RBT d.o.o.** Stegne 11 SI-1000 Ljubljana Phone: +386 (0)1 / 513 8116	**South Africa** **ADROIT TECHNOLOGIES** Four Ways 20 Waterford Office Park 189 Witkoppen Road Gauteng 2001 ZA Phone: + 27 (0)11/658 8100	**South Africa** **MEGADRIVE AUTOMATION CC** Mega Park, 26 Fourie Street Brackenfell, Cape Town 7560 ZA	**Switzerland** **Robotronic AG** Schlachthofstrasse 8 CH-8406 Winterthur Telefon: +41 (0)52/267 02 00
Tunisia **MOTRA ELECTRIC** 3, Residence Imen Avenue Des Martyrs El Mourouj III 2074	**Ukraine** **CSC- AUTOMATION Ltd.** 4 B, Yevhena Sverstyuka Str. UA-02002 Kiev Phone: +380 (0)44 / 494 33 44			

Mitsubishi Electric's e-F@ctory concept utilizes both FA and IT technologies, to reduce the total cost of development, production and maintenance, with the aim of achieving manufacturing that is a „step ahead of the times". It is supported by the e-F@ctory Alliance Partners covering software, devices, and system integration, creating the optimal e-F@ctory architecture to meet the end users needs and investment plans.

Version check:

Mitsubishi Electric Europe B.V.

Factory Automation EMEA, Mitsubishi-Electric-Platz 1, D-40882 Ratingen Germany

Art. No. 203684-Q

Printed in October 2026

All trademarks and copyrights acknowledged