MITSUBISHI ELECTRIC

MELSERVO

Servo Amplifiers and Motors

Beginners Manual

MR-J4-A(-RJ)/A4(-RJ)
MR-J4-B(-RJ)/B4(-RJ)
MR-J4W-B
MR-J4-GF(-RJ)/GF4(-RJ)
MR-J4-TM/TM4

Art. No.: 280214
29 01 2018
Version B

MITSUBISHI ELECTRIC INDUSTRIAL AUTOMATION

Version check

About This Manual

The texts, illustration, diagrams and examples in this manual are provided for information purposes only. They are intended as aids to help explain the installation, operation, programming and use of the servo drives and amplifiers of the series MELSERVO J4-A, MELSERVO J4-B, MELSERVO J4W-B, MELSERVO J4-GF and MELSERVO J4-TM.

If you have any questions about the installation and operation of any of the products described in this manual please contact your local sales office or distributor (see back cover). You can find the latest information and answers to frequently asked questions on our website at www.mitsubishi-automation.com.

MITSUBISHI ELECTRIC EUROPE BV reserves the right to make changes to this manual or the technical specifications of its products at any time without notice.

Beginners manual for servo amplifiers
series MR-J4-A, MR-J4-B, MR-J4W-B, MR-J4-GF and MR-J4-TM
Art. no.: 280214

Version			Revisions/Additions/Corrections	
A	10/2014	pdp - rw	—	
B	01/2018	pdp - rw	Changes:	Update to the current versions (*) of the original instruction manuals: • MR-J4-A: Ver. G to P • MR-J4-A-RJ: Ver. A to C • MR-J4-B(-RJ): Ver. F to M • MR-J4W-B: Ver. F to K
			Additions:	• MR-J4-GF(-RJ) (* Ver. C) and MR-J4-TM (* Ver. E) • CN2L connector for MR-J4-A-RJ and MR-J4-B-RJ • Servomotors

Safety Guidelines

General safety information and precautions

For use by qualified staff only

This manual is only intended for use by properly trained and qualified electrical technicians who are fully acquainted with the relevant automation technology safety standards. All work with the hardware described, including system design, installation, configuration, maintenance, service and testing of the equipment, may only be performed by trained electrical technicians with approved qualifications who are fully acquainted with all the applicable automation technology safety standards and regulations. Any operations or modifications to the hardware and/or software of our products not specifically described in this manual may only be performed by authorised MITSUBISHI ELECTRIC staff.

Proper use of the products

The amplifiers of the MELSERVO J4 series are only intended for the specific applications explicitly described in this manual. All parameters and settings specified in this manual must be observed. The products described have all been designed, manufactured, tested and documented in strict compliance with the relevant safety standards. Unqualified modification of the hardware or software or failure to observe the warnings on the products and in this manual may result in serious personal injury and/or damage to property. Only peripherals and expansion equipment specifically recommended and approved by MITSUBISHI ELECTRIC may be used in combination with amplifiers of the MELSERVO J4 series.

All and any other uses or application of the products shall be deemed to be improper.

Relevant safety regulations

All safety and accident prevention regulations relevant to your specific application must be observed in the system design, installation, configuration, maintenance, servicing and testing of these products. The regulations listed below are particularly important in this regard.

This list does not claim to be complete, however; you are responsible for being familiar with and conforming to the regulations applicable to you in your location.

- VDE Standards
  - VDE 0100
    Regulations for the erection of power installations with rated voltages below 1000 V
  - VDE 0105
    Operation of power installations
  - VDE 0113
    Electrical installations with electronic equipment
  - VDE 0160
    Electronic equipment for use in power installations
  - VDE 0550/0551
    Regulations for transformers
  - VDE 0700
    Safety of electrical appliances for household use and similar applications
  - VDE 0860
    Safety regulations for mains-powered electronic appliances and their accessories for household use and similar applications.

- Fire safety regulations
- Accident prevention regulations
  - VBG Nr.4
    Electrical systems and equipment

Safety warnings in this manual

In this manual warnings that are relevant for safety are identified as follows:

DANGER:

Failure to observe the safety warnings identified with this symbol can result in health and injury hazards for the user.

WARNING:

Failure to observe the safety warnings identified with this symbol can result in damage to the equipment or other property.

Failure to observe notes can result in serious consequences too. To prevent injury of persons all safety and accident prevention regulations must be observed.

NOTES

means that incorrect handling can result in misoperation of servo amplifier and motor.
However failure to observe notes does not result in health and injury hazards for the user or damage to the equipment or other property.

Note also indicates a different setting of parameters, a different function or a different use or provides information about the use of peripherals and expansion equipment respectively

Compliance with EC directives

EU directives exist to facilitate free trade within the EU. They lay down "fundamental protective regulations" to ensure the removal of technical barriers to trade between the EU member states. In the member states of the EU basic safety requirements and the qualifications for bearing the CE mark are regulated by the Machinery Directive (2006/42/EC), the EMC Directive (2014/30/EU) and the Low Voltage Directive (2014/35/EU).

Conformity with the EU directives is demonstrated with a declaration of conformity and displaying the CE mark on the product, its packaging or its operating manual.

The directives listed above apply to appliances, machinery and systems but not to individual components, unless the components perform a direct function for the end user. Since a servo amplifier must be installed together with a servo motor, a control device and other mechanical parts to perform a useful function for the end user, servo amplifiers cannot be said to perform such a direct function. This means that they can be declared as complex components for which a declaration of conformity and the CE mark are not required. This opinion is also upheld by CEMEP, the European Committee of Manufacturers of Electrical Machines and Power Electronics.

However, the servo amplifiers do fulfil the requirements for the CE mark for the machines or accessories in which the servo amplifiers are deployed, in accordance with the Low Voltage Directive. In order to help users ensure conformity with the EMC Directive Mitsubishi Electric has published a manual titled EMC Installation Guidelines (Art. no. 103944), which describes the proper installation of the servo amplifiers, construction of the switchgear cabinet and other important installation tasks. Please contact your dealer for this publication.

Specific safety information and precautions

The following safety precautions are intended as a general guideline for using PLC systems together with other equipment. These precautions must always be observed in the design, installation and operation of all control systems.

DANGER:

- ***Observe all safety and accident prevention regulations applicable to your specific application. Always disconnect all power supplies before performing installation and wiring work or opening any of the assemblies, components and devices.***
- ***Before installation, wiring and opening of modules, components and devices, switch power off and wait for more than 15 minutes. Then, confirm the voltage is safe with a voltage tester. Otherwise, you may get an electric shock.***
- ***Take safety measures, e.g. provide covers, to prevent accidental contact of hands and parts (cables, etc.) with the servo amplifier heat sink, regenerative resistor, servo motor, etc. since they may be hot while power is on or for some time after power-off. Their temperatures may be high and you may get burnt or a parts may damaged.***
- ***Assemblies, components and devices must always be installed in a shockproof housing fitted with a proper cover and fuses or circuit breakers.***
- ***Devices with a permanent connection to the mains power supply must be integrated in the building installations with an all-pole disconnection switch and a suitable fuse.***
- ***Ground the servo amplifier and servo motor securely.***
- ***Check power cables and lines connected to the equipment regularly for breaks and insulation damage. If cable damage is found immediately disconnect the equipment and the cables from the power supply and replace the defective cabling.***
- ***Before using the equipment for the first time check that the power supply rating matches that of the local mains power.***
- ***EMERGENCY OFF facilities conforming to EN 60204/IEC 204 and VDE 0113 must remain fully operative at all times and in all PLC operating modes. The EMERGENCY OFF facility reset function must be designed so that it cannot ever cause an uncontrolled or undefined restart.***
- ***Configure the electromagnetic brake circuit so that it is activated by the EMERGENCY OFF facility.***
- ***Residual current protective devices pursuant to DIN VDE Standard 0641 Parts 1-3 are not adequate on their own as protection against indirect contact for installations with PLC systems. Additional and/or other protection facilities are essential for such installations.***
- ***If your application requires by installation standards an RCD (residual current device) as up stream protection please select the type B according to DIN VDE 0100-530.***
- ***During power-on or operation, do not open the front cover of the servo amplifier. You may get an electric shock.***
- ***Do not operate the servo amplifier with the front cover removed. High-voltage terminals and charging area are exposed and you may get an electric shock.***
- ***Except for wiring or periodic inspection, do not remove the front cover even of the servo amplifier if the power is off. The servo amplifier is charged and you may get an electric shock.***
- ***To avoid an electric shock, insulate the connections of the power supply terminals.***

Specific safety precautions

WARNING:

- ***Install the servo equipment with full consideration of heat generation during operation. Leave specified clearances between the servo amplifier and control box inside walls or other equipment. Take measures to prevent the internal temperature of the control box from exceeding the environmental conditions.***
- ***Do not install the servo amplifier, servo motor and regenerative resistor on or near combustibles. Otherwise a fire may cause.***
- ***When using servo drives always ensure that all electrical and mechanical specifications and requirements are observed exactly.***
- ***Always connect a magnetic contactor between the power supply and the main circuit power supply (L1, L2, and L3) of the servo amplifier, in order to configure a circuit that shuts down the power supply on the side of the servo amplifier's power supply. If a magnetic contactor is not connected, continuous flow of a large current may cause a fire when the servo amplifier malfunctions.***
- ***When the servo amplifier, the servo motor or the regenerative option has become faulty, switch off the main servo amplifier power side. Continuous flow of a large current may cause a fire.***
- ***Provide an external emergency stop circuit to ensure that operation can be stopped and power switched off immediately.***

Structure

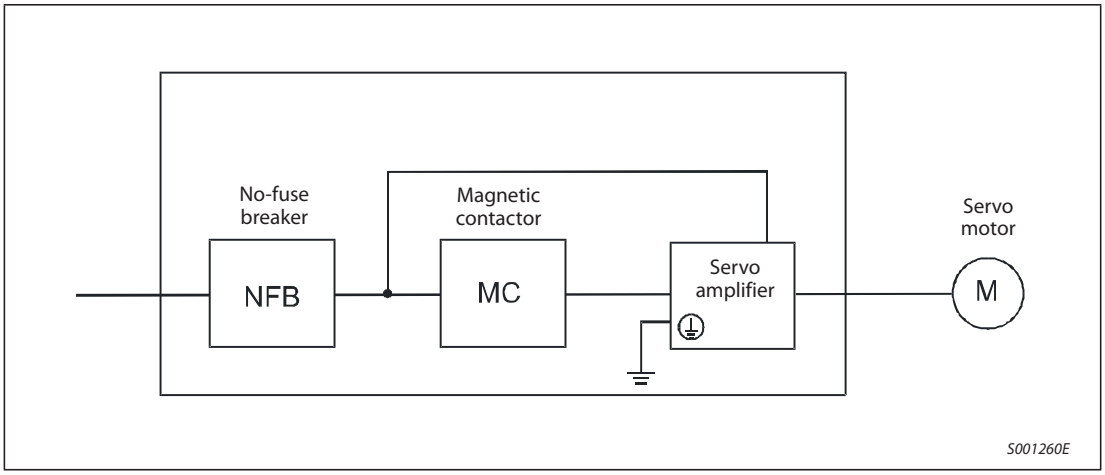

Environment

Operate the servo amplifier at or above the contamination level 2 set forth in IEC60664-1. For this purpose, install the servo amplifier in a control box which is protected against water, oil, carbon, dust, dirt, etc. (IP54).

Grounding

To prevent an electric shock, always connect the protective earth (PE) terminals of the servo amplifier to the protective earth (PE) of the control box. Do not connect two or more ground cables to the same protective earth (PE) terminal. Always connect the cables to the terminals one-to-one.

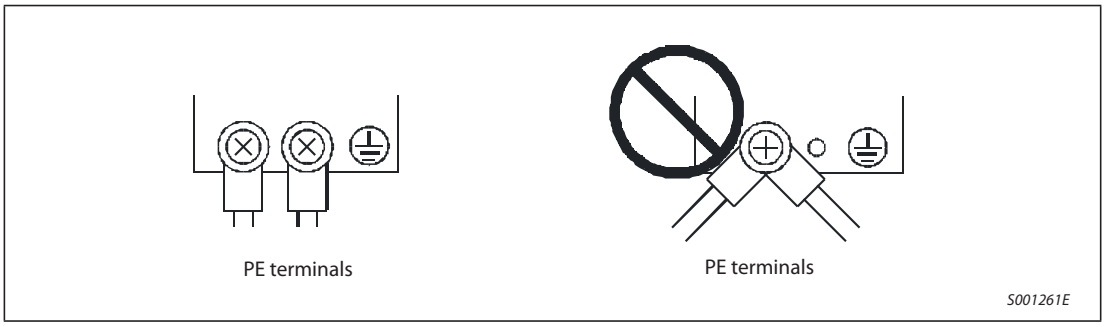

Typographic Conventions

Use of notes

Notes containing important information are clearly identified as follows:

NOTE | Note text

Use of examples

Examples containing important information are clearly identified as follows:

Example ▽ Example text △

Numbering in figures and illustrations

Reference numbers in figures and illustrations are shown with white numbers in a black circle and the corresponding explanations shown beneath the illustrations are identified with the same numbers, like this:

❶ ❷ ❸ ❹

Procedures

In some cases the setup, operation, maintenance and other instructions are explained with numbered procedures. The individual steps of these procedures are numbered in ascending order with black numbers in a white circle, and they must be performed in the exact order shown:

① Text.

② Text.

③ Text.

Footnotes in tables

Footnote characters in tables are printed in superscript and the corresponding footnotes shown beneath the table are identified by the same characters, also in superscript.

If a table contains more than one footnote, they are all listed below the table and numbered in ascending order with black numbers in a white circle, like this:

① Text

② Text

③ Text

Writing conventions and guidance notes

Keys or key-combinations are indicated in square brackets, such as [Enter], [Shift] or [Ctrl]. Menu names of the menu bar, of the drop-down menus, options of a dialogue screen and buttons are indicated in italic bold letters, such as the drop down menu New in the Project menu.

Table of Contents

A Appendix

1 Introduction

This english document is the original instruction.

1.1 What is a servo amplifier?

1.1.1 The servo amplifier in the motion control system

Servo amplifiers are components of a so-called motion control system. This concept represents different types of motion control such as single-axis positioning in micro-installations but also for the solution of sophisticated tasks like multiple-axis positioning in large-scale installations. With a motion control system you are able to solve different positioning applications from positioning with one axis in small production lines up to multi axis positioning in large-scale systems.

The Motion CPU controls different more or less complex motion sequences via the connected servo amplifiers and motors.

Typical applications of a motion control systems are:

- Plastics and textile processing,
- Packaging,
- Printing and paper converting,
- Forming,
- Wood and glass working,
- Production of semiconductors

The following diagram shows the components of a motion control system with CPUs, modules, servo amplifiers and motors.

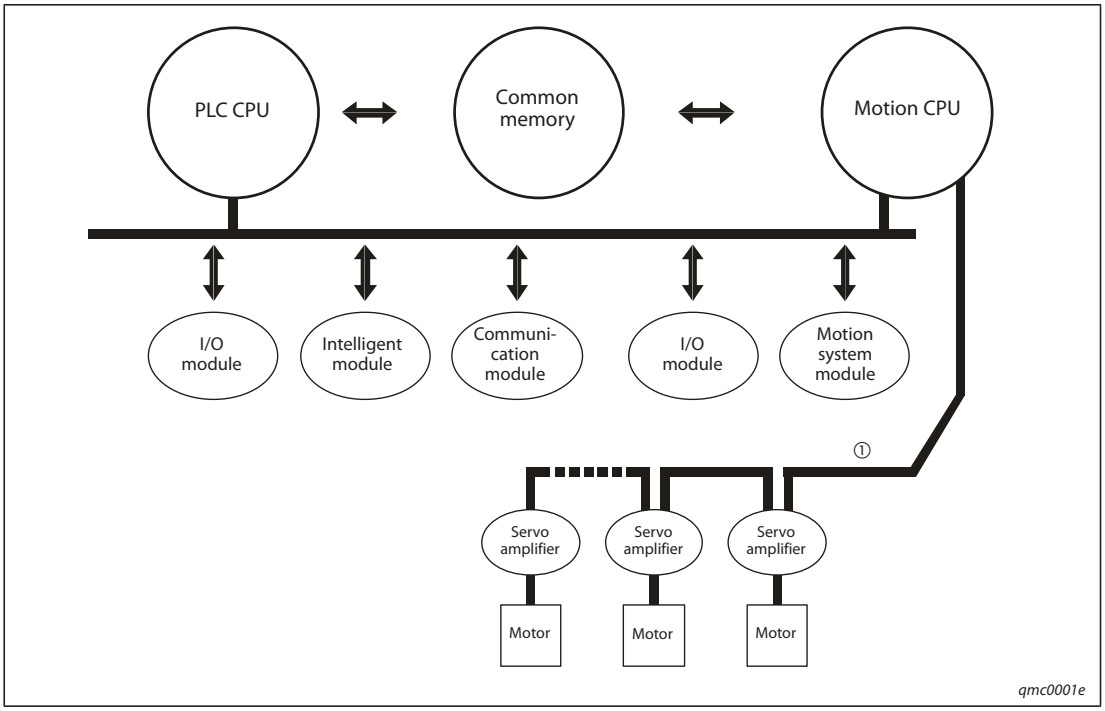

Fig. 1-1: *Block diagram of a motion control system*

① The bus system for control depends on the used servo amplifier series MR-J4-□A, MR-J4-□B, MR-J4W□-□B, MR-J4-□GF or MR-J4-□TM.

1.1.2 Function of a servo amplifier

Servo amplifiers are specially designed frequency inverters for driving servo motors for dynamic movements.

The block diagram in fig. 1-2 shows the two main components:

- the power rail (top) and
- the electronics for control and monitoring (bottom).

The power supply loads the capacitor C of the current source via the rectifier with a DC voltage U_z. The power inverter generates from this DC voltage U_z a 3-phase AC voltage with variable frequency to drive the servo motor. In the case, the drive works as a brake, the brake chopper inside the current source limits the voltage U_z and dissipates the braking energy via the resistor R by heat. If there is needed a higher dissipation of braking energy or if the brake events are more frequent, an external resistor R is used to remove a higher quantity of heat.

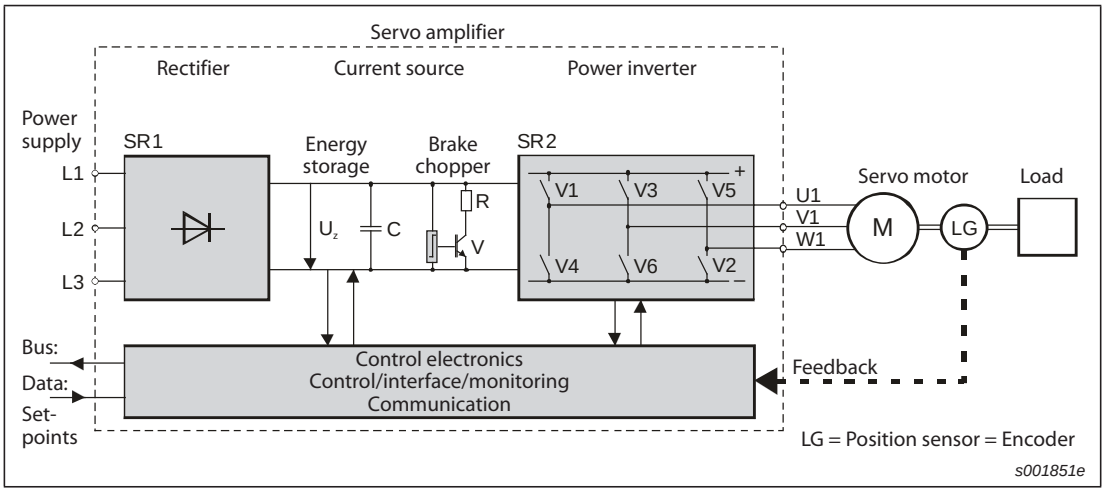

Fig. 1-2: *Block diagram of a servo amplifier*

1.1.3 Servo motors

Today servo motors are generally used to execute high dynamic movements. The motors work on the principle of a synchronous machine, which is permanently magnetic excited (rotary servo motor).

The motors provide the torque or the power directly and are extremely effective in doing so. Driven by servo amplifiers they work at variable, process-optimizing speed and do precise positioning without delay for the machine. An encoder (position sensor) on the motor shaft reports the position of the rotor back to the servo amplifier. To fix the reached position even in the event of power failure, the motors are equipped with an optional electromagnetic brake. This ensures an perfect adaptation to every needed application (e.g. hanging loads).

The cabling of the power supply of the motor and of the encoder is done by pre-assembled cables. Most of the connections are done with connectors so that the cabling is easy, quick and safe.

Among the rotary servo motors the MR-J4 series servo amplifier is additionally able to operate linear servo motors and direct drive servo motors as standard.

Linear servo motor

A linear servo motor is an AC asynchronous linear motor that works by the same general principles as other induction motors but is designed to directly produce motion in a straight line. Instead of producing a torque (by rotation) it produces a force by a moving linear magnetic field acting on conductors in the field. The most common mode of operation is as a Lorentz-type actuator, in which the applied force is linearly proportional to the current and the magnetic field.

Direct drive servo motor

If a high torque is needed in a special application by using a conventional motor, this requirement can only be solved by using a gear or belt reduction system. Such mechanical reduction systems increase torque but accuracy and repeatability will be reduced by backlash and friction.

The direct drive servo motor is gearless so it eliminates friction from its power transmission. They are suitable for low-speed and high-torque operation. Since the absolute position encoder is coupled directly to the load, system accuracy and repeatability are greatly increased and backlash is eliminated.

1.1.4 Features of servo amplifiers and motors of the MELSERVO J4 series

The motion CPU controls the connected servo amplifiers which drive the servo motors for movement and position. The servo motor is tuned to a certain shaft position, direction of rotation, speed or a certain torque.

All servo motors from the MELSERVO J4 series are equipped by default with a single-turn absolute position encoder. Due to the high encoder resolution of up to 4,194,304 pulses per revolution (22 bit), accurate positioning and high speed stability are possible. The encoder is rigidly coupled to the motor shaft of the servo motor and gives the motor shaft position via the encoder cable back to the servo amplifier (actual position value). The servo amplifier controls position deviations by comparing the actual position value and the position setpoint (command value of the motion CPU). This position deviation or error is also called droop pulse.

By connecting a buffer battery to the servo amplifier, the reference position of the servo motor, also called zero position or home position, can be stored. By supplying the memory with the battery voltage the data of the reference position are kept in the servo amplifier even if the power supply to the servo amplifier fails, is switched off or in case of an alarm. This function is called absolute position detection system.

You can connect the servo amplifier to a PC for configuration. For this purpose Mitsubishi offers the setup software "MR Configurator2". The connection between servo amplifier and PC is done by the built-in USB interface (MR-J4-A, MR-J4-B and MR-J4W-B) and additionally by RS-422 interface (only MR-J4-A).

The MR-J4-A servo amplifiers were developed for multiple applications and are equipped with inputs for analog and pulse signals. MR-J4-B and MR-J4W-B servo amplifiers with SSCNET III/H bus network are designed for operation with Mitsubishi motion controllers of MELSEC System Q.

The MR-J4-A-RJ servo amplifier has a built-in positioning function (point table and program methods, and indexer positioning operation). A simple positioning system can be configured without a controller such as positioning module.

The SSCNET III/H bus system is an optical communication system with serial data exchange via optical fibre optics based on light. This optical bus system offers high transmission speed and cannot be influenced by electromagnetic interfering signals from other products.

Servo amplifiers of the MR-J4 series are available with an output power range from 100 W up to 22 kW. Depending on the model they are suitable for one-phase power supply (output power of 700 W or less) and three-phase power supply of 200–230 V AC or for three-phase power supply of 380–480 V AC.

The MR-J4W2-B servo is designed to drive two servo motors, the MR-J4W3-B to drive three servo motors. Both servo amplifier models are SSCNET III/H compatible enabling energy-conservative operation, less-wiring, compact machine design at lower cost.

The MR-J4-GF servo amplifier can be connected by default to controllers, such as a simple motion module on CC-Link IE Field Network, which allows highspeed and large-capacity communication.

For control, the multi-network compatible MR-J4-TM servo amplifier can be connected to the network you use like EtherCAT, EtherNet/IP™ and PROFINET by combining with a network module.

The servo amplifiers with RJ hardware specification have an additional CN2L connector, where an A/B/Z-phase differential output method external encoder can be connected. In a fully closed loop system, a four-wire type external encoder is connectible as well.

1.2 Environmental conditions

Store and use the servo amplifier and servo motor in the following environmental conditions.

Environment		Conditions		
		Servo amplifier	**Servo motor**	
Ambient temperature	Operation	0 to +55 C (non-freezing)	0 to +40 C (non-freezing)	
	Storage	–20 to +65 C (non-freezing)	–15 to +70 C (non-freezing)	
Ambient humidity	Operation	max. 90% (non-condensing)	max. 80% (non-condensing)	
	Storage		max. 90% (With no dew condensation)	
Atmosphere		Indoors (no direct sunlight), free from corrosive gas, flammable gas, oil mist, dust, and dirt		
Altitude		max. 2000 m		
Protective structure		IP20①	HG-MR	IP65 ②
			HG-KR	IP65 ③
			HG-SR	IP67 ②
			HG-JR53(4) to 903(4) HG-JR701M(4) to 15K1M(4) HG-JR601(4) to 12K1(4)	IP67 ②
			HG-JR22K1M(4) HG15K1(4) to 25K1(4)	IP44 ②
			HG-RR	IP65 ②
			HG-UR	IP65 ②
			LM-F	IP00
			LM-U2	IP00
			LM-H3	IP00
			LM-K2	IP00
			TM-RFM	IP42 ④
Vibration		max. 5.9 m/s²	HG-MR	X, Y: 49 m/s²
			HG-KR	X, Y: 49 m/s²
			HG-SR51 to 81 HG-SR52(4) to 152(4)	X, Y: 24.5 m/s²
			HG-SR121 to 201 HG-SR202(4) to 352(4)	X: 24.5 m/s², Y: 49 m/s²
			HG-SR301 to 421 HG-SR502(4) to 702(4)	X: 24.5 m/s², Y: 29.4 m/s²
			HG-JR53(4) to 503(4) HG-JR701M(4) to 22K1M(4) HG-JR601(4) to 25K1(4)	X, Y: 24.5 m/s²
			HG-JR703(4) to903(4)	X: 24.5 m/s², Y: 29.4 m/s²
			HG-RR	X, Y: 24.5 m/s²
			HG-UR72 to 152	X, Y: 24.5 m/s²
			HG-UR202 to 502	X: 24.5 m/s², Y: 49 m/s²
			LM-F	X, Y: 49 m/s²
			LM-U2	X, Y: 49 m/s²
			LM-H3	X, Y: 49 m/s²
			LM-K2	X, Y: 49 m/s²
			TM-RFM	X, Y: 49 m/s² ⑤

Tab. 1-1: *Environmental conditions*

① For some models the terminal block is excluded.

② The shaft-through portion is excluded.

③ The shaft-through portion is excluded. For geared servo motor, IP rating of the reducer portion is equivalent to IP44.

④ Connectors and gap between rotor and stator are excluded.

⑤ TM-RFM040J10, TM-RFM120J10, TM-RFM240J10: X, Y: 24.5 m/s²

1.3 Terminology

The terms and abbreviations below are important for servo amplifiers and are used frequently in this guide.

Direction of rotation of electric motors

The direction (or sense) of rotation of electric motors is defined looking at the end of the motor shaft. If the motor has two shaft ends the direction is defined looking at the main drive shaft end, which is defined as the shaft end away from the end where the cooling fan or the brake are installed.

- Forward

  Counterclockwise (CCW)/ Left

- Reverse

  Clockwise (CW)/ Right

Safety Function

The servo amplifier series MR-J4 supports the Safe Torque Off (STO) function described in IEC/EN 61800-5-2. STO is a stop function used to shut down energy to motors which exert torque. The servo amplifier electronically cuts off the power output from the servo amplifier to the servo motor.

The purpose for this safety function is as follows.

- Uncontrolled stop according to stop category 0 of IEC 60204-1
- Designed to prevent unexpected start-up

Operating modes of the servo amplifier

The MR-J4-A servo amplifier can be set to different operating modes by parameter setting.

- Position control mode

  An up to 4 Mpps high-speed pulse train is used to control the speed and direction of a motor and execute precision positioning of 4,194,304 pulses/rev (22 bits) resolution.
  A torque limit is imposed on the servo amplifier by the clamp circuit to protect the power transistor in the main circuit from overcurrent due to sudden acceleration/deceleration or overload. This torque limit value can be changed to any value with an external analog input or the parameter.

- Speed control mode

  An external analog speed command (0–±10 V DC) or parameter-driven internal speed command (max. 7 speeds) is used to control the speed and direction of a servo motor smoothly. There are also the acceleration/deceleration time constant setting in response to speed command, the servo lock function at a stop time, and automatic offset adjustment function in response to external analog speed command.

- Torque control mode

  An external analog torque command (0–±8 V DC) or parameter-driven internal torque command is used to control the torque output by the servo motor.
  To protect misoperation under no load, the speed limit function (external or internal setting) is also available for application to tension control, etc.

- Positioning mode (only RJ type)

  Automatic and manual positioning modes are supported by point table, program and indexer for normal operation as well as for home position return. Home position return can be done by different methods like dog type, count type, data set type, stopper type etc.

Fully closed loop system

The MR-J4-B(-RJ)/A(-RJ) servo amplifier is compatible with fully closed loop control system. A load side encoder can be used for reading a position feedback signal in order to realise full closed position feedback. By parameter setting different control modes can be selected.

Control mode	Description
Semi closed loop control	Position is controlled according to the servo motor-side data.
Dual feedback control	Position is controlled according to the servo motor-side data and load-side data.
Fully closed loop control	Position is controlled according to the load-side data.

Tab. 1-2: *Control modes of the closed loop system*

Cyclic synchronous position mode (csp)

This is a position control mode where a position command is received at a constant period (cycle) to drive the servo motor in the synchronous communication with a controller. It is supported by the MR-J4-TM (EtherCAT) and MR-J4-GF.

Cyclic synchronous velocity mode (csv)

This is a speed control mode where a speed command is received at a constant period (cycle) to drive the servo motor in the synchronous communication with a controller. It is supported by the MR-J4-TM (EtherCAT) and MR-J4-GF.

Cyclic synchronous torque mode (cst)

This is a torque control mode where a torque command is received at a constant period (cycle) to drive the servo motor in the synchronous communication with a controller. It is supported by the MR-J4-TM (EtherCAT) and MR-J4-GF

Profile position mode (pp)

This is a positioning operation mode where an end position command is received to drive the servo motor in the synchronous or asynchronous communication with a controller. It is supported by the MR-J4-TM (EtherCAT/EtherNet/IP).

Profile velocity mode (pv)

This is a mode where a target speed command is received to drive the servo motor in the synchronous or asynchronous communication with a controller. It is supported by the MR-J4-TM (EtherCAT/EtherNet/IP).

Profile torque mode (tq)

This is a mode where a target torque command is received to drive the servo motor in the synchronous or asynchronous communication with a controller. It is supported by the MR-J4-TM (EtherCAT/EtherNet/IP).

Homing mode (hm)

This is a mode where the servo amplifier performs a home position return operation using the method directed by the controller. It is supported by the MR-J4-TM (EtherCAT/EtherNet/IP).

2 Introduction of the devices

2.1 Servo amplifier series MR-J4-A(-RJ)

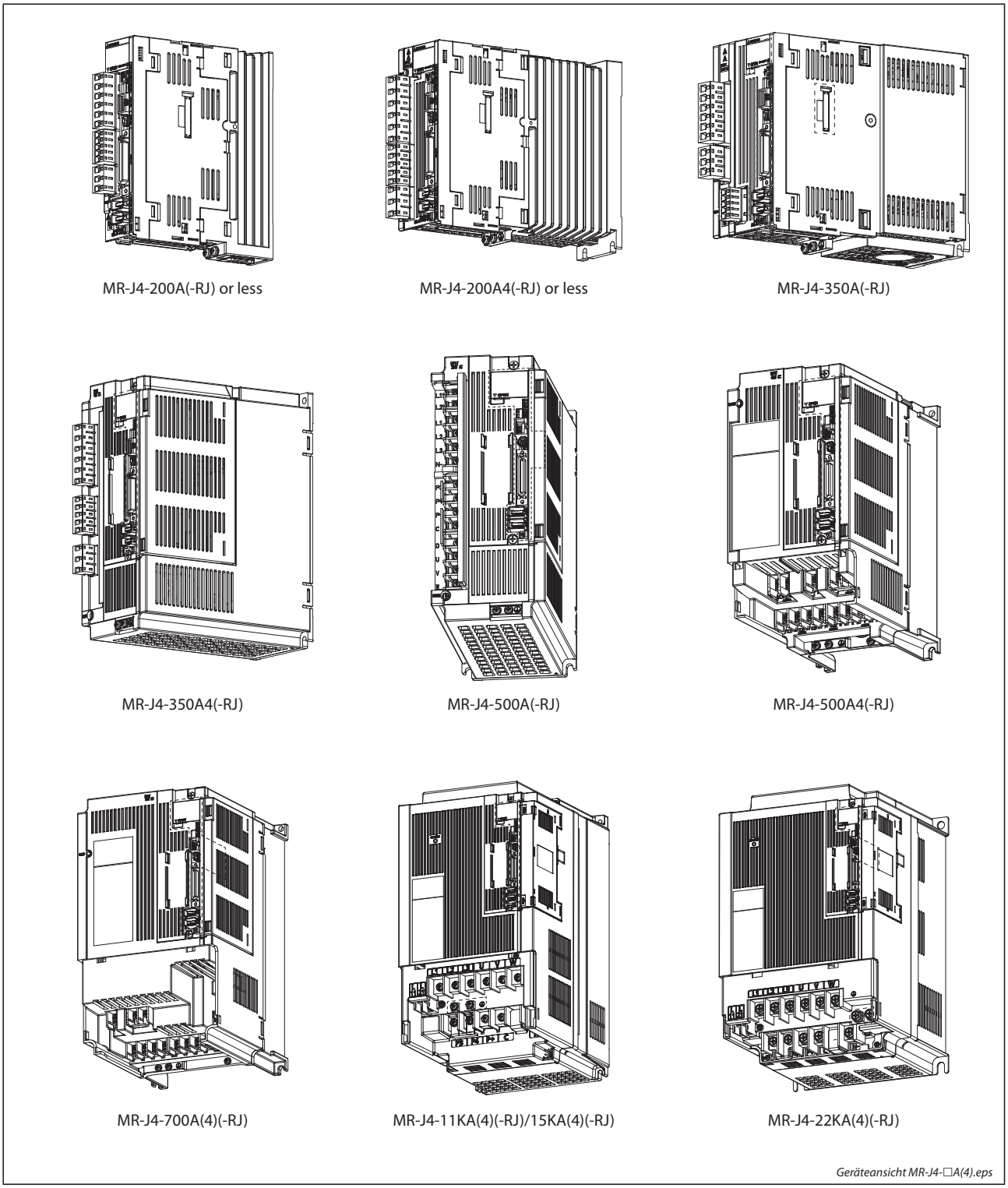

Fig. 2-1: *Model overview of the servo amplifiers MR-J4-A(-RJ)*

NOTE The MR-J4-□A(4)-RJ servo amplifier has the CN2L connector.

2.2 Servo amplifier series MR-J4-B(-RJ)

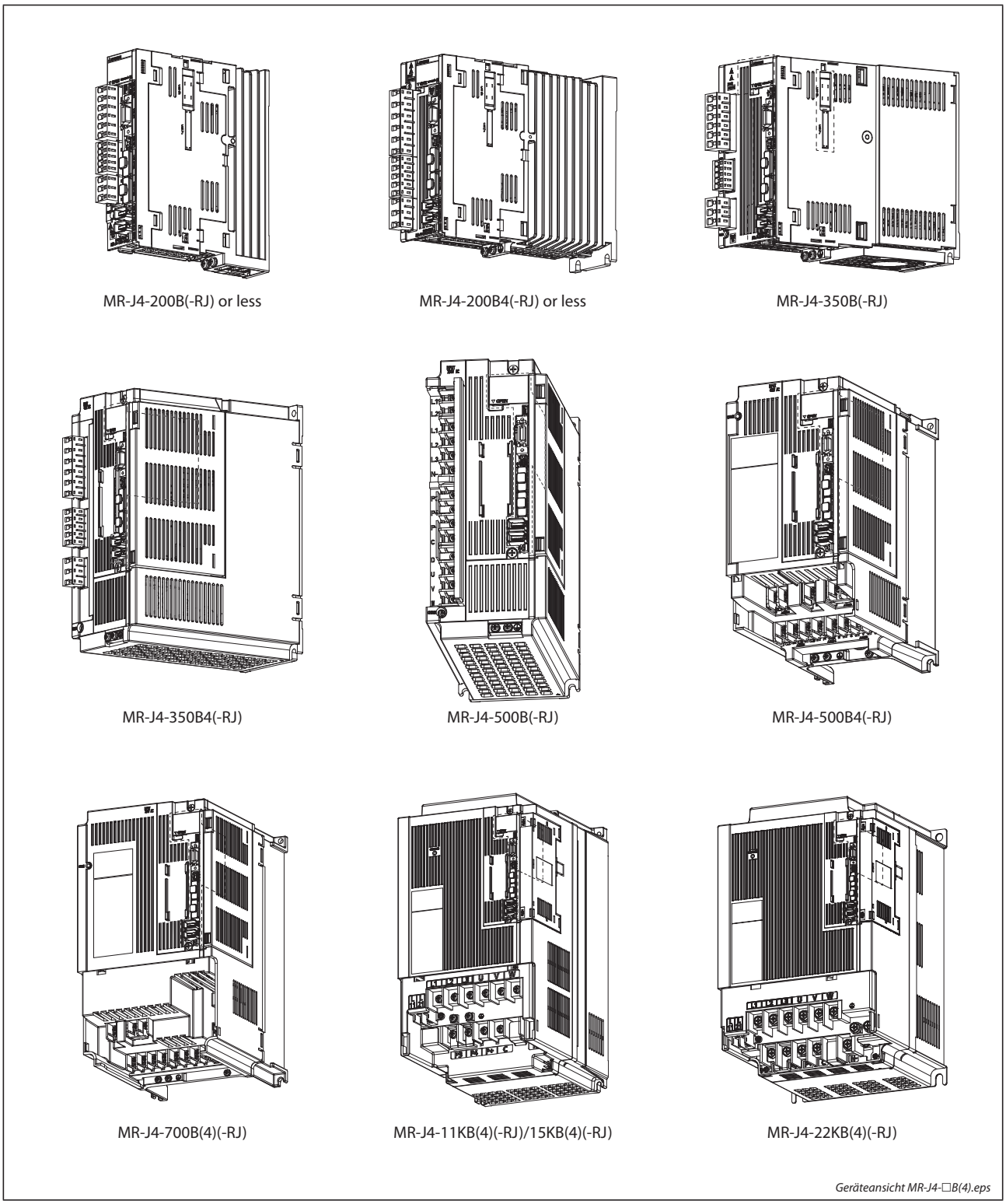

Fig. 2-2: *Model overview of the servo amplifiers MR-J4-B(-RJ)*

NOTES

The number "4" in the model designation of the servo amplifier indicates the version for 400 V. If the number 4 is inside brackets, the model is also available in the version 200 V.

The MR-J4-□B(4)-RJ servo amplifier has the CN2L connector.

2.3 Servo amplifier series MR-J4W-B

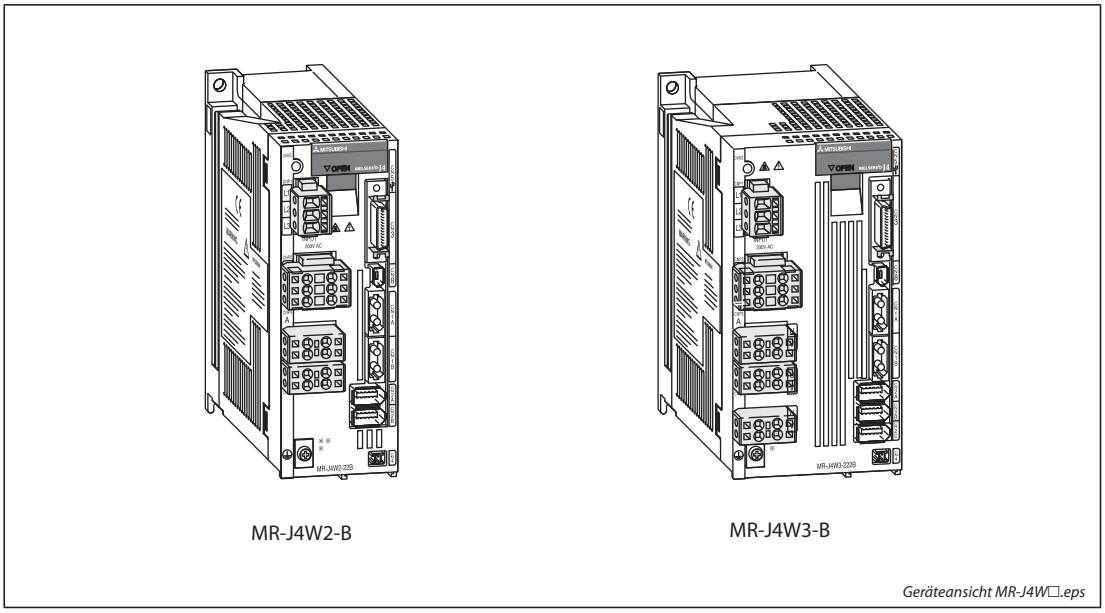

Fig. 2-3: *Model overview of the servo amplifiers MR-J4W-B*

2.4 Servo amplifier series MR-J4-GF(-RJ)

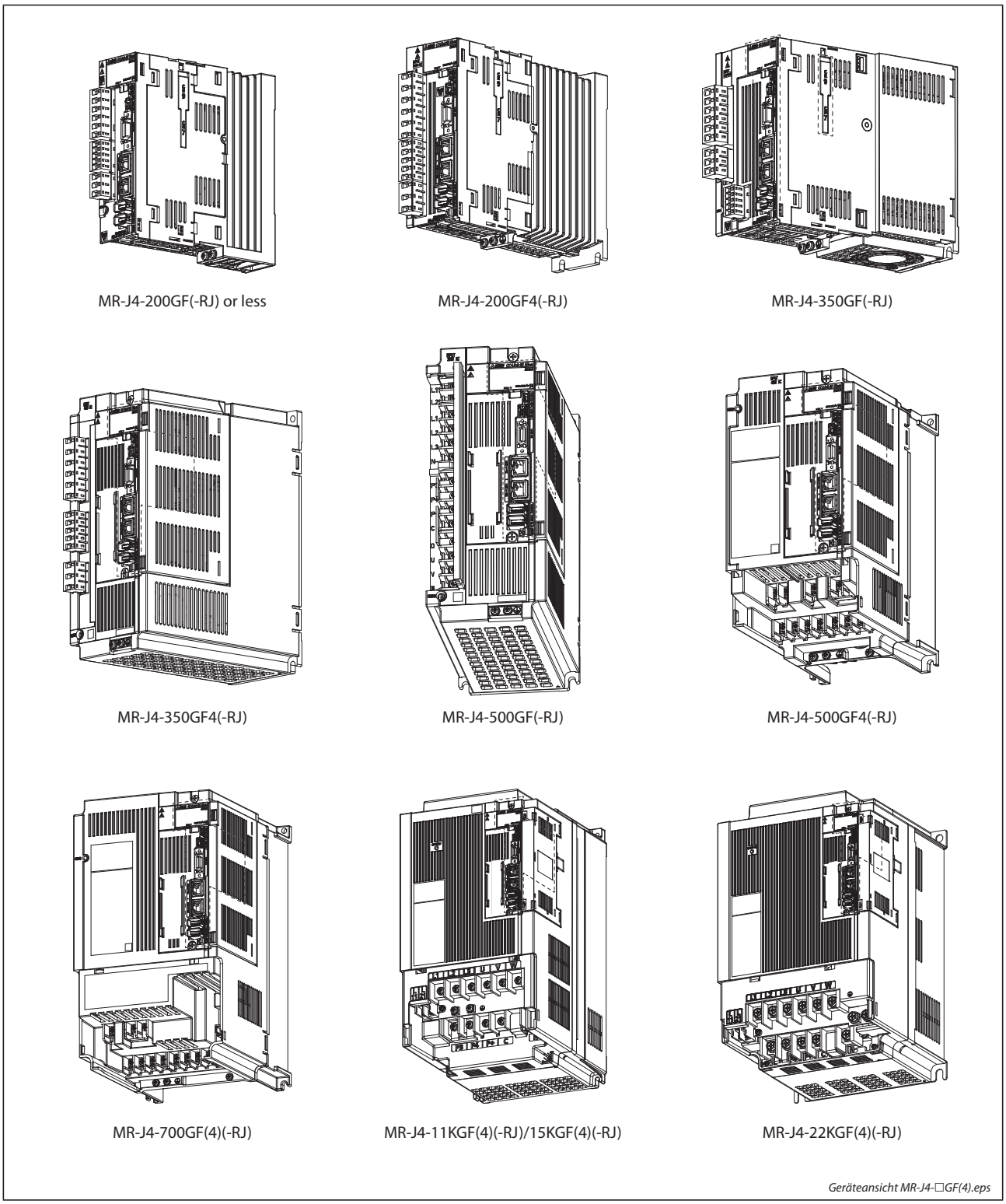

Fig. 2-4: *Model overview of the servo amplifiers MR-J4-GF(-RJ)*

NOTE The MR-J4-□A(4)-RJ servo amplifier has the CN2L connector.

2.5 Servo amplifier series MR-J4-TM

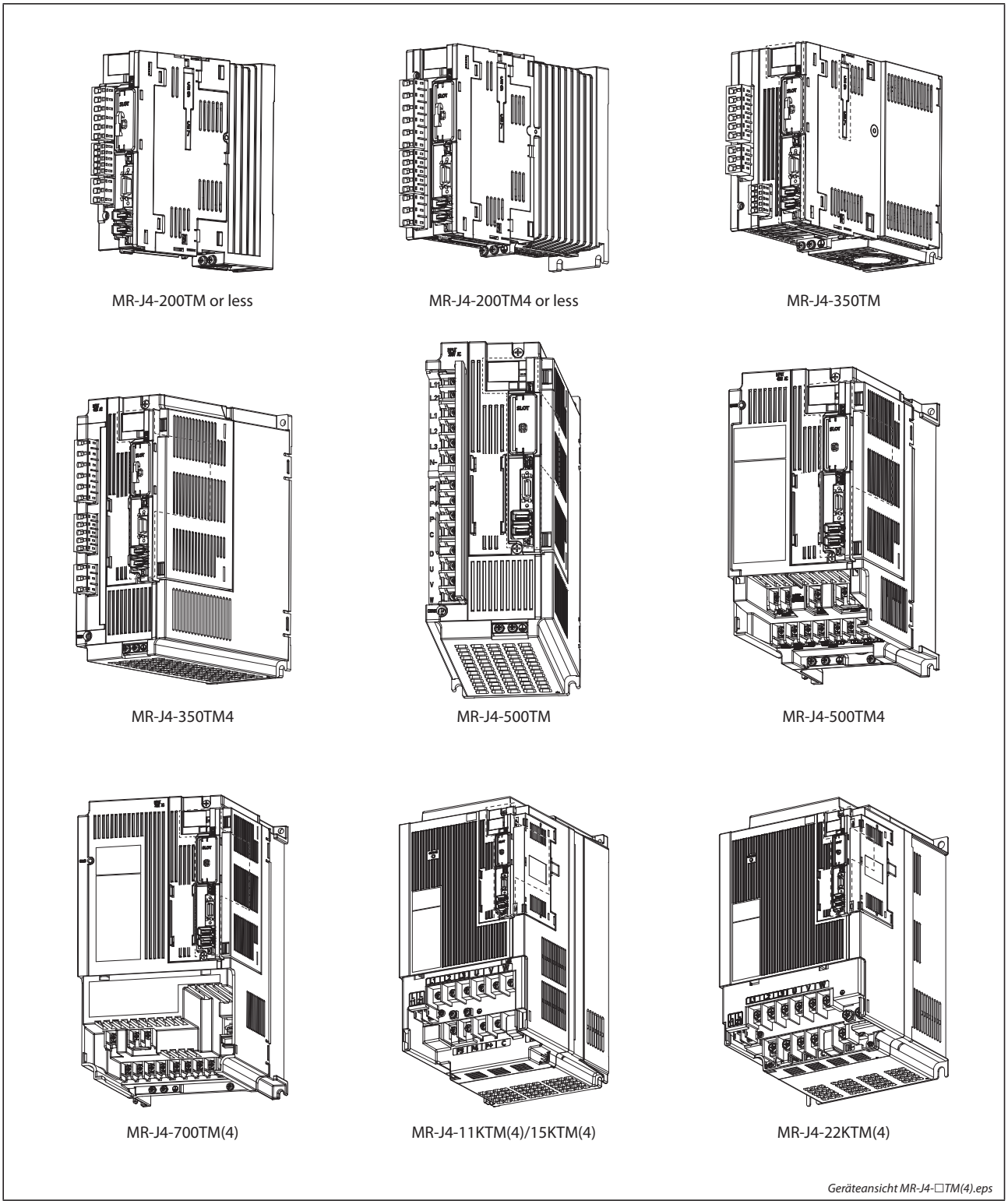

Fig. 2-5: *Model overview of the servo amplifiers MR-J4-TM*

NOTE The number "4" in the model designation of the servo amplifier indicates the version for 400 V. If the number 4 is inside brackets, the model is also available in the version 200 V.

2.6 Model designation and output power

MR-J4-□A □-□
MR-J4-□B □-□
MR-J4-□GF □-□
MR-J4-□TM□-□

Series

None	Standard
-RJ	Fully closed loop control four-wire type/load-side encoder A/B/Z-phase input compatible
-ED	Dynamic brake which is built in 7 kW or smaller servo amplifiers is removed.
-RU	Dynamic brake which is built in 7 kW or smaller servo amplifiers MR-J4-□A□-RJ, MR-J4-□B□-RJ or MR-J4-□GF□-RJ is removed.
-PX	Indicates a servo amplifier of 11 kW to 22 kW that does not use a regenerative resistor as standard accessory.
-RZ	Indicates a servo amplifier MR-J4-□A□-RJ, MR-J4-□B□-RJ or MR-J4-□GF□-RJ of 11 kW to 22 kW that does not use a regenerative resistor as standard accessory.
-EB	Type with a specially-coated servo amplifier board (IEC 60721-3-3 Class 3C2)
-KS	Type with a specially-coated servo amplifier board (IEC 60721-3-3 Class 3C2) at servo amplifier MR-J4-□A□-RJ, MR-J4-□B□-RJ or MR-J4-□GF□-RJ

Code	Power supply
—	200–240 V AC, 1-phase or 3-phase ①
4	380–480 V AC, 3-phase

A: General purpose interface
B: SSCNET III/H compatible
GF: CC-Link IE Field Network
TM: Multi-network interface

Code	Rated output [kW]
10	0.1
20	0.2
40	0.4
60	0.6
70	0.75

Code	Rated output [kW]
100	1
200	2
350	3.5
500	5
700	7

Code	Rated output [kW]
11K	11
15K	15
22K	22

Fig. 2-6: *Model designation and rated output of the servo amplifiers for one axis*

① Servo amplifiers up to MR-J4-200A, MR-J4-200B, MR-J4-200GF or MR-J4-200TM (included), can be connected 1-phase.
When using 1-phase 200–240 V AC power supply, operate the servo amplifier MR-J4-100A, MR-J4-200A, MR-J4-100B, MR-J4-200B, MR-J4-100GF, MR-J4-200GF, MR-J4-100TM and MR-J4-200TM at 75% or smaller effective load ratio.

MR-J4W□-□B-□

Series

- None Standard
- -ED Without a dynamic brake
- -EB Type with a specially-coated servo amplifier board (IEC 60721-3-3 Class 3C2)

B: SSCNET III/H compatible

Code	Rated output [kW]	
	A-axis	B-axis
22	0.2	0.2
44	0.4	0.4
77	0.75	0.75
1010	1	1

Code	Rated output [kW]		
	A-axis	B-axis	C-axis
222	0.2	0.2	0.2
444	0.4	0.4	0.4

Code	Number of axes
W2	2
W3	3

Fig. 2-7: *Model designation and rated output of the servo amplifiers for two or three axes*

2.7 Combinations of servo amplifiers and servo motors

The following tables show the possible combinations between the servo amplifier series MR-J4-A(-RJ), MR-J4-B(-RJ), MR-J4W-B, MR-J4-TM and MR-J4-GF(-RJ) and the rotary motors, linear motors and direct drive motors.

2.7.1 200 V class

Servo amplifier	Rotary motor	Linear motor (primary side)	Direct drive motor
MR-J4-10A(-RJ) MR-J4-10B(-RJ) MR-J4-10GF(-RJ) MR-J4-10TM	HG-KR053, HG-KR13, HG-MR053, HG-MR13	—	—
MR-J4-20A(-RJ) MR-J4-20B(-RJ) MR-J4-20GF(-RJ) MR-J4-20TM	HG-KR23, HG-MR23	LM-U2PAB-05M-0SS0, LM-U2PBB-07M-1SS0	TM-RFM002C20
MR-J4-40A(-RJ) MR-J4-40B(-RJ) MR-J4-40GF(-RJ) MR-J4-40TM	HG-KR43, HG-MR43	LM-H3P2A-07P-BSS0, LM-H3P3A-12P-CSS0, LM-K2P1A-01M-2SS1, LM-U2PAD-10M-0SS0, LM-U2PAF-15M-0SS0	TM-RFM004C20
MR-J4-60A(-RJ) MR-J4-60B(-RJ) MR-J4-60GF(-RJ) MR-J4-60TM	HG-SR51, HG-SR52, HG-JR53	LM-U2PBD-15M-1SS0	TM-RFM006C20, TM-RFM006E20
MR-J4-70A(-RJ) MR-J4-70B(-RJ) MR-J4-70GF(-RJ) MR-J4-70TM	HG-KR73, HG-MR73, HG-UR72, HG-JR73	LM-H3P3B-24P-CSS0, LM-H3P3C-36P-CSS0, LM-H3P7A-24P-ASS0, LM-K2P2A-02M-1SS1, LM-U2PBF-22M-1SS0	TM-RFM012E20, TM-RFM012G20, TM-RFM040J10
MR-J4-100A(-RJ) MR-J4-100B(-RJ) MR-J4-100GF(-RJ) MR-J4-100TM	HG-SR81, HG-SR102, HG-JR103, HG-JR53 ①	—	TM-RFM018E20
MR-J4-200A(-RJ) MR-J4-200B(-RJ) MR-J4-200GF(-RJ) MR-J4-200TM	HG-SR121, HG-SR201, HG-SR152, HG-SR202, HG-UR152, HG-RR103, HG-RR153, HG-JR153, HG-JR203, HG-JR73 ①, HG-JR103 ①	LM-H3P3D-48P-CSS0, LM-H3P7B-48P-ASS0, LM-H3P7C-72P-ASS0, LM-FP2B-06M-1SS0, LM-K2P1C-03M-2SS1, LM-U2P2B-40M-2SS0	—
MR-J4-350A(-RJ) MR-J4-350B(-RJ) MR-J4-350GF(-RJ) MR-J4-350TM	HG-SR301, HG-SR352, HG-UR202, HG-RR203, HG-JR353, HG-JR153 ①, HG-JR203 ①	LM-H3P7D-96P-ASS0, LM-K2P2C-07M-1SS1, LM-K2P3C-14M-1SS1, LM-U2P2C-60M-2SS0	TM-RFM048G20, TM-RFM072G20, TM-RFM120J10
MR-J4-500A(-RJ) MR-J4-500B(-RJ) MR-J4-500GF(-RJ) MR-J4-500TM	HG-SR421, HG-SR502, HG-UR352, HG-UR502, HG-RR353, HG-RR503, HG-JR503, HG-JR353	LM-FP2D-12M-1SS0, LM-FP4B-12M-1SS0, LM-K2P2E-12M-1SS1, LM-K2P3E-24M-1SS1, LM-U2P2D-80M-2SS0	TM-RFM240J10

Tab. 2-1: *Servo amplifier and motor combination for 200 V class (1)*

① When the maximum torque is400 %

Servo amplifier	Rotary motor	Linear motor (primary side)	Direct drive motor
MR-J4-700A(-RJ) MR-J4-700B(-RJ) MR-J4-700GF(-RJ) MR-J4-700TM	HG-SR702, HG-JR601, HG-JR-701M, HG-JR703, HG-JR503 ①	LM-FP2F-18M-1SS0, LM-FP4D-24M-1SS0	—
MR-J4-11KA(-RJ) MR-J4-11KB(-RJ) MR-J4-11KGF(-RJ) MR-J4-11KTM	HG-JR801, HG-JR903, HG-JR11K1M, HG-JR12K1	LM-FP4F-36M-1SS0	—
MR-J4-15KA(-RJ) MR-J4-15KB(-RJ) MR-J4-15KGF(-RJ) MR-J4-15KTM	HG-JR15K1, HG-JR15K1M	LM-FP4H-48M-1SS0	—
MR-J4-22KA(-RJ) MR-J4-22KB(-RJ) MR-J4-22KGF(-RJ) MR-J4-22KTM	HG-JR20K1, HG-JR22K1M, HG-JR25K1	—	—
MR-J4W2-22B MR-J4W3-222B	HG-KR053, HG-KR13, HG-KR23, HG-MR053, HG-MR13, HG-MR23	LM-U2PAB-05M-0SS0, LM-U2PBB-07M-1SS0	TM-RFM002C20
MR-J4W2-44B MR-J4W3-444B	HG-KR053, HG-KR13, HG-KR23, HG-KR43, HG-MR053, HG-MR13, HG-MR23, HG-MR43	LM-H3P2A-07P-BSS0, LM-H3P3A-12P-CSS0, LM-K2P1A-01M-2SS1, LM-U2PAB-05M-0SS0, LM-U2PAD-10M-0SS0, LM-U2PAF-15M-0SS0, LM-U2PBB-07M-1SS0	TM-RFM002C20, TM-RFM004C20
MR-J4W2-77B	HG-KR43, HG-KR73, HG-MR43, HG-MR73, HG-SR51, HG-SR52, HG-UR72, HG-JR53, HG-JR73	LM-H3P2A-07P-BSS0, LM-H3P3A-12P-CSS0, LM-H3P3B-24P-CSS0, LM-H3P3C-36P-CSS0, LM-H3P7A-24P-ASS0, LM-K2P1A-01M-2SS1, LM-K2P2A-02M-1SS1, LM-U2PAD-10M-0SS0, LM-U2PAF-15M-0SS0, LM-U2PBD-15M-1SS0, LM-U2PBF-22M-1SS0	TM-RFM004C20, TM-RFM006C20, TM-RFM006E20, TM-RFM012E20, TM-RFM012G20, TM-RFM040J10
MR-J4W2-1010B	HG-KR43, HG-KR73, HG-MR43, HG-MR73, HG-SR51, HG-SR52, HG-SR81, HG-SR102, HG-UR72, HG-JR73, HG-JR103, HG-JR53 ①	LM-H3P2A-07P-BSS0, LM-H3P3A-12P-CSS0, LM-H3P3B-24P-CSS0, LM-H3P3C-36P-CSS0, LM-H3P7A-24P-ASS0, LM-K2P1A-01M-2SS1, LM-K2P2A-02M-1SS1, LM-U2PAD-10M-0SS0, LM-U2PAF-15M-0SS0, LM-U2PBD-15M-1SS0, LM-U2PBF-22M-1SS0	TM-RFM004C20, TM-RFM006C20, TM-RFM006E20, TM-RFM012E20, TM-RFM018E20, TM-RFM012G20, TM-RFM040J10

Tab. 2-1: *Servo amplifier and motor combination for 200 V class (2)*

① When the maximum torque is 400 %

2.7.2 400 V class

Servo amplifier	Rotary motor	Linear motor (primary side)	Direct drive motor
MR-J4-60A4(-RJ) MR-J4-60B4(-RJ) MR-J4-60GF4(-RJ) MR-J4-60TM4	HG-SR524, HG-JR534	—	—
MR-J4-100A4(-RJ) MR-J4-100B4(-RJ) MR-J4-100GF4(-RJ) MR-J4-100TM4	HG-SR1024, HG-JR734, HG-JR1034, HG-JR534 ①	—	—
MR-J4-200A4(-RJ) MR-J4-200B4(-RJ) MR-J4-200GF4(-RJ) MR-J4-200TM4	HG-SR1524, HG-SR2024, HG-JR1534, HG-JR2034, HG-JR734 ①, HG-JR1034 ①	—	—
MR-J4-350A4(-RJ) MR-J4-350B4(-RJ) MR-J4-350GF4(-RJ) MR-J4-350TM4	HG-SR3524, HG-JR3534, HG-JR-1534 ①, HG-JR-2034 ①	—	—
MR-J4-500A4(-RJ) MR-J4-500B4(-RJ) MR-J4-500GF4(-RJ) MR-J4-500TM4	HG-SR5024, HG-JR5034, HG-JR3534 ①	—	—
MR-J4-700A4(-RJ) MR-J4-700B4(-RJ) MR-J4-700GF4(-RJ) MR-J4-700TM4	HG-SR7024, HG-JR6014, HG-JR701M4, HG-JR7034, HG-JR5034 ①	—	—
MR-J4-11KA4(-RJ) MR-J4-11KB4(-RJ) MR-J4-11KGF4(-RJ) MR-J4-11KTM4	HG-JR8014, HG-JR12K14, HG-JR9034, HG-JR11K1M4	—	—
MR-J4-15KA4(-RJ) MR-J4-15KB4(-RJ) MR-J4-15KGF4(-RJ) MR-J4-15KTM4	HK-JR15K14, HG-JR15K1M4	—	—
MR-J4-22KA4(-RJ) MR-J4-22KB4(-RJ) MR-J4-22KGF4(-RJ) MR-J4-22KTM4	HG-JR20K14, HG-JR25K14, HG-JR22K1M4	LM-FP5H-60M-1SS0	—

Tab. 2-2: *Servo amplifier and motor combination for 400 V class*

① When the maximum torque is 400 %

2.8 Removal and reinstallation of the front cover

The following shows how to remove and reinstall the front cover of MR-J4-700A(-RJ)/B(-RJ) to MR-J4-22KA(-RJ)/B(-RJ), MR-J4-500A(-RJ)/B4(-RJ) to MR-J4-22KA(-RJ)/B4(-RJ), MR-J4-700GF(-RJ) to MR-J4-22KGF(-RJ), MR-J4-500GF4(-RJ) to MR-J4-22KGF4(-RJ), MR-J4-700TM to MR-J4-22KTM and MRJ4-500TM4 to MR-J4-22KTM4.

DANGER:

Before removing or reinstalling the front cover, make sure that the charge lamp is off more than 15 minutes after power off. Then, confirm that the voltage between P+ and N- is safe with a voltage tester and others. Otherwise, you may get an electric shock. In addition, when confirming whether the charge lamp is off or not, always confirm it from the front of the servo amplifier.

NOTE

The MR-J4-A series will be used hereinafter as an example for the removal and attachment of the front cover. The procedure for the MR-J4-B, MR-J4-GF and MR-J4-TM series is identical.

The figures below show the steps for removing (fig. 2-8 to fig. 2-10) and reinstalling (fig. 2-11 to fig. 2-13) of the front cover for the servo amplifier MR-J4-700A.

2.8.1 Removal of the front cover

① Hold the ends of lower side of the front cover with both hands.

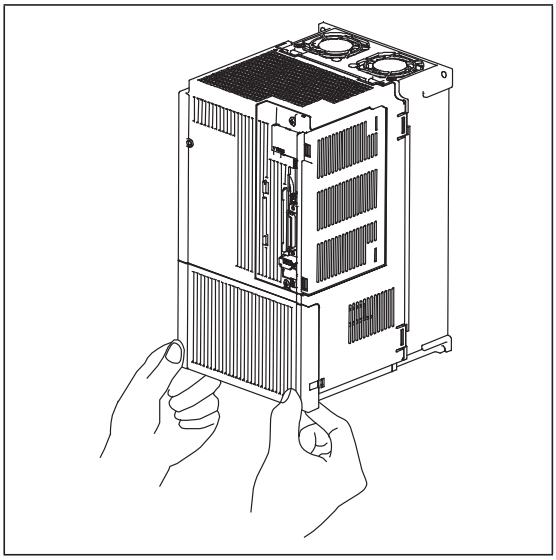

Fig. 2-8:
Step ①: Removing the front cover

MR-J4-700A_Frontabdeckung entfernen_1.eps

② Pull up the cover, supporting at point ❶.

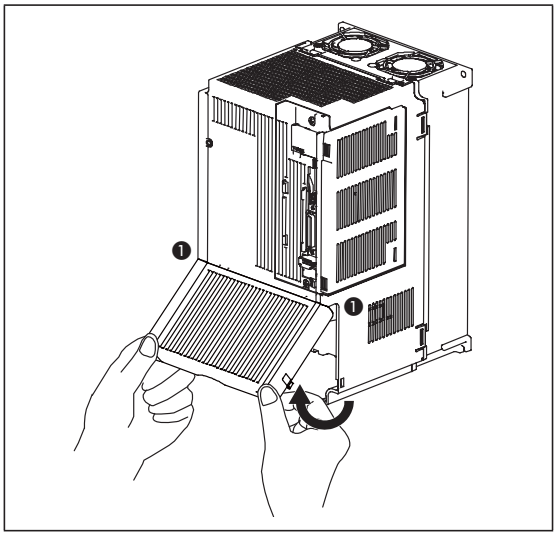

Fig. 2-9:
Step ②: Removing the front cover

MR-J4-700A_Frontabdeckung entfernen_2.eps

③ Pull out the front cover to remove. Hold the ends of lower side of the front cover with both hands.

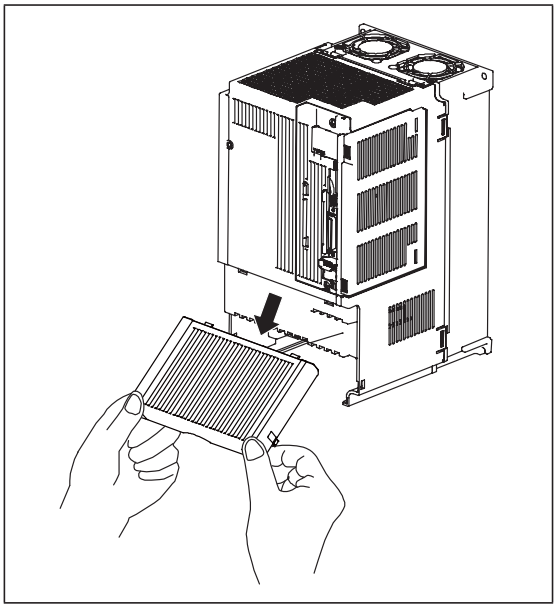

Fig. 2-10:
Step ③: Removing the front cover

MR-J4-700A_Frontabdeckung entfernen_3.eps

2.8.2 Reinstallation of the front cover

① Insert the front cover setting tabs into the sockets of the servo amplifier (2 places).

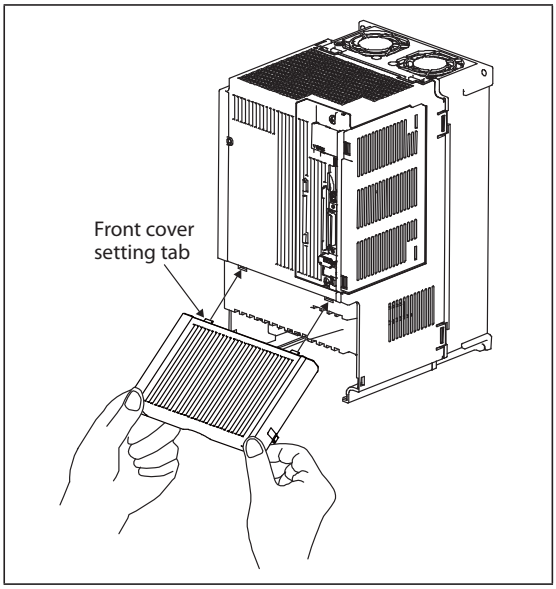

Fig. 2-11:
Step ①: Reinstalling the front cover

MR-J4-700A_Frontabdeckung anbringen_1.eps

② Push down the cover, supporting at point ❶.

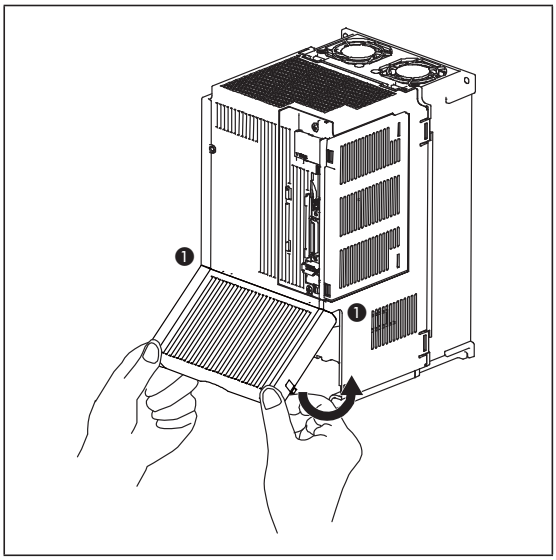

Fig. 2-12:
Step ②: Reinstalling the front cover

MR-J4-700A_Frontabdeckung anbringen_2.eps

③ Press the cover against the terminal box until the setting tabs click.

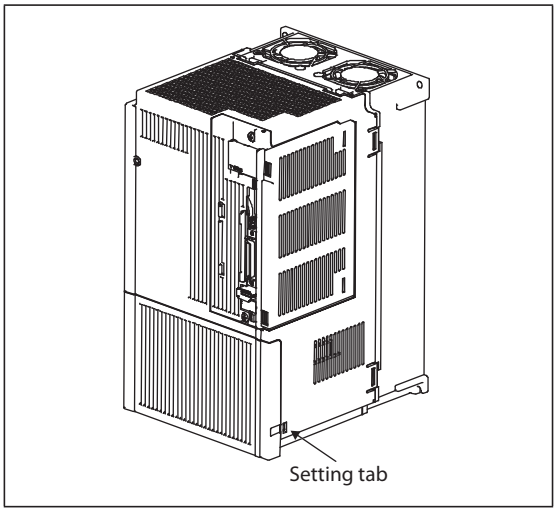

Fig. 2-13:
Step ③: Reinstalling the front cover

MR-J4-700A_Frontabdeckung anbringen_3.eps

NOTE The multi-axis servo amplifier MR-J4W-B has no front cover.

2.9 Installation and removal of the network module (only MR-J4-TM)

DANGER:

Before installing or removing the network module, make sure that the charge lamp is off more than 15 minutes after power off. Then, confirm that the voltage between P+ and N- is safe with a voltage tester and others. Otherwise, you may get an electric shock. In addition, when confirming whether the charge lamp is off or not, always confirm it from the front of the servo amplifier.

WARNING:

Avoid installing and removing the network module repeatedly. Any contact failure of the connector may be caused.

NOTE

The internal circuits of the servo amplifier and the network module may be damaged by static electricity. Always take the following precautions.

- Ground human body and work bench.
- Do not touch the conductive areas, such as connector pins and electrical parts, directly by hand.

2.9.1 Installation of the network module

① Remove the slot cover with a flat-blade screwdriver, etc. Make sure to store the removed cover.

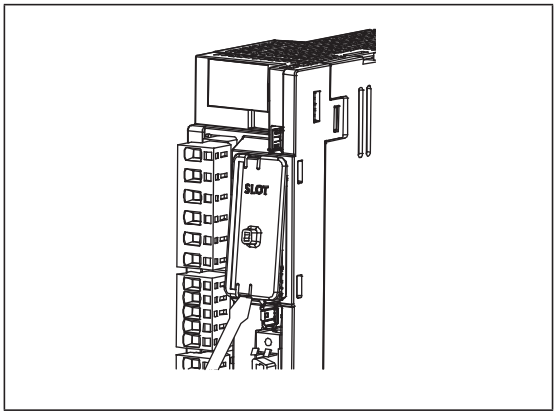

Fig. 2-14:
Step ①: Removing the slot cover

MR-J4-TM_Netzwerkmodul einsetzten_1.eps

② Press the network module against the board on the right side so as to align with the guide in the servo amplifier, and insert it along the board.
Forcibly inserting it all the way in obliquely without aligning with the guide may break the board and the network module.

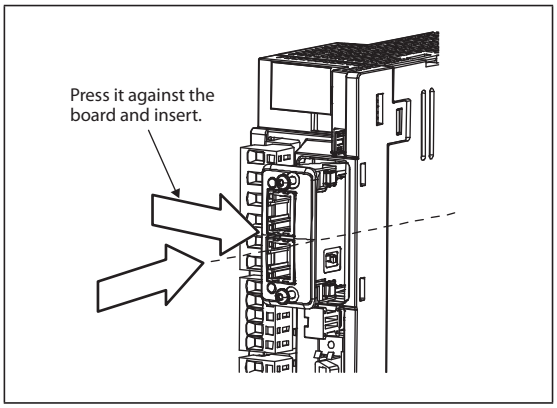

Fig. 2-15:
Step ②: Inserting the network module

MR-J4-TM Netzwerkmodul einsetzten_2.eps

③ Check if the network module tabs can be confirmed through the confirmation hole on the side of the servo amplifier as shown in the diagram.
If the tabs cannot be confirmed, insert the network module while pressing it since the tabs hit the board end face, and the module is incompletely inserted.

④ Tighten the fixing screws using a #8 6-lobe driver. Tightening torque is 0.25 N•m.

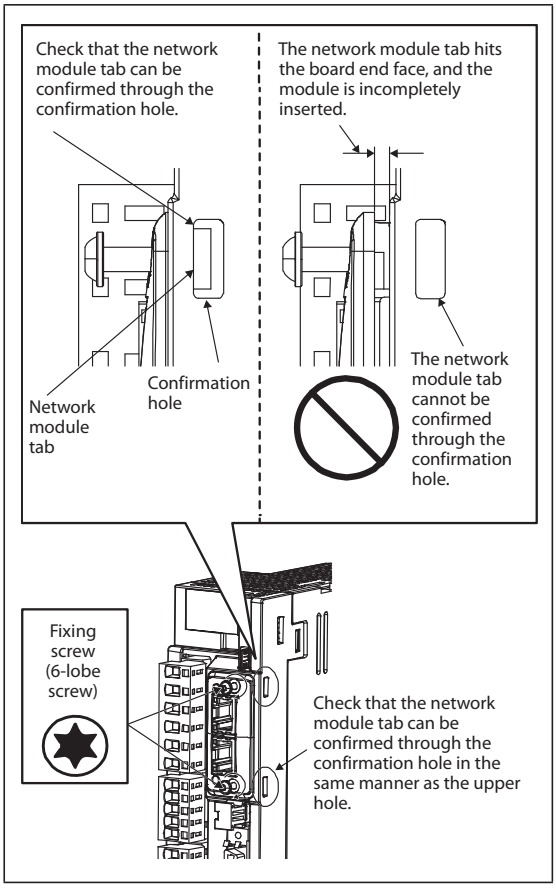

Fig. 2-16:
Step ③: Checking the correct position of the network module
Step ④: Tightening the fixing screws

MR-J4-TM_Netzwerkmodul einsetzten_3.eps

2.9.2 Removal of the network module

① Loosen two screws fixing the network module approximately 5 mm using the #8 6-lobe driver.

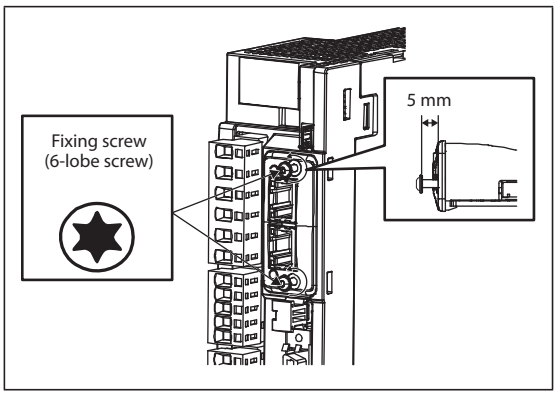

Fig. 2-17:
Step ①: Loosening the fixing screws

MR-J4-TM_Netzwerkmodul entfernen_1.eps

② Hook the slot cover included at product shipment on the loosened screws as shown in the diagram.

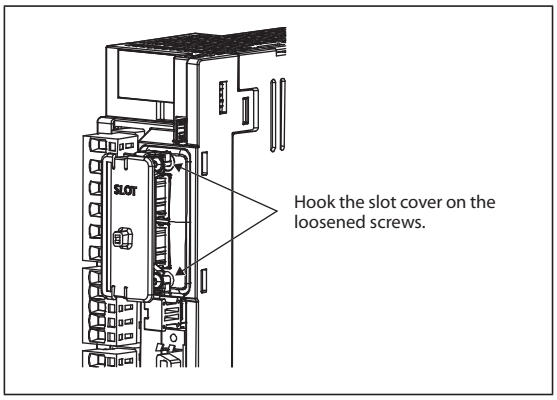

Fig. 2-18:
Step ②: Hooking the slot cover

MR-J4-TM_Netzwerkmodul entfernen_2.eps

③ Hold the slot cover, and pull it straight toward you to remove the network module.

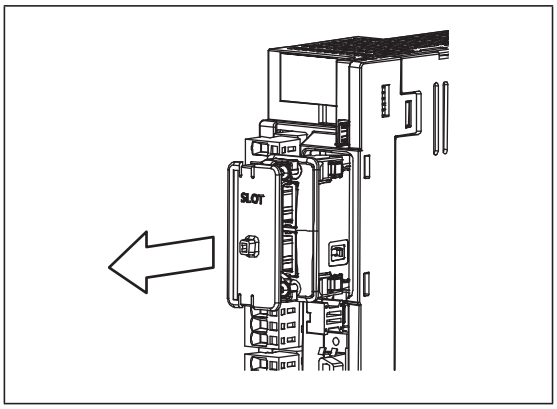

Fig. 2-19:
Step ③: Removing the network module

MR-J4-TM_Netzwerkmodul entfernen_3.eps

④ Fit the slot cover to prevent dust from entering it.

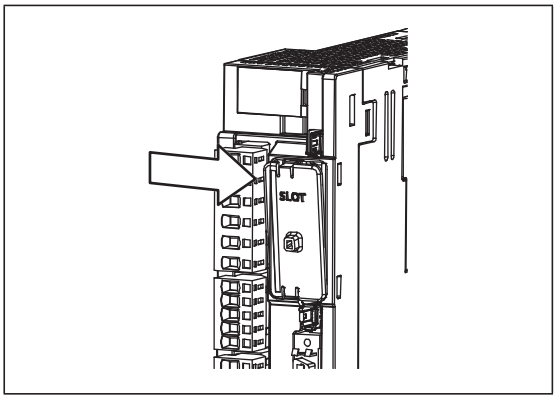

Fig. 2-20:
Step ④: Mounting the slot cover

MR-J4-TM_Netzwerkmodul entfernen_4.eps

2.10 Rating plate

The following shows two examples of the rating plate for explanation of each item.

NOTE

Production year and month of the servo motor are indicated in a serial number on the rating plate. The year and month are indicated by the last two digits of the year and one digit of the month [1 to 9, X(10), Y(11), and Z(12)].
For January 2012, the Serial No. is like, "SER. _ _ _ _ _ _ _ _ _ _ 121"

2.10.1 MR-J4-A(-RJ), MR-J4-B(-RJ), MR-J4-GF(-RJ) and MR-J4-TM

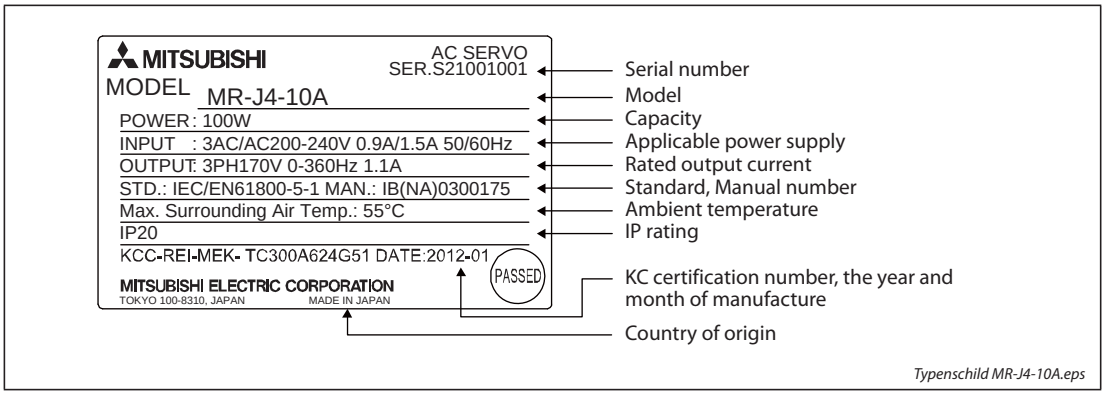

Fig. 2-21: *Rating plate MR-J4-10A*

2.10.2 MR-J4W-B

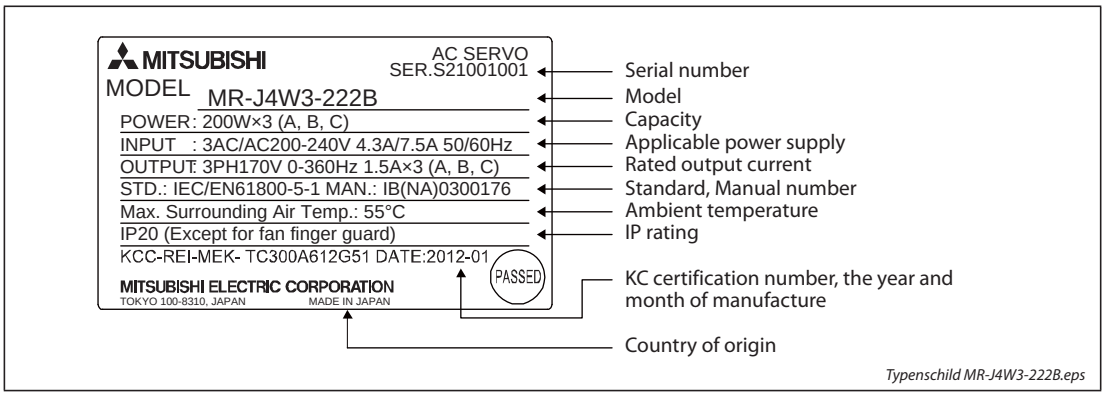

Fig. 2-22: *Rating plate MR-J4W3-222B*

3 Introduction of the servo motors

This chapter shows the various servo motors that are available for the servo amplifier series MR-J4-A(-RJ), MR-J4-B(-RJ), MR-J4W-B, MR-J4-TM and MR-J4-GF(-RJ).

The motors are classified into rotatory motors, linear motors and direct drive motors.

Refer to section 2.7. to get the recommended combinations of servo amplifiers and servo motors.

3.1 Rotatory servo motors

3.1.1 Model overview

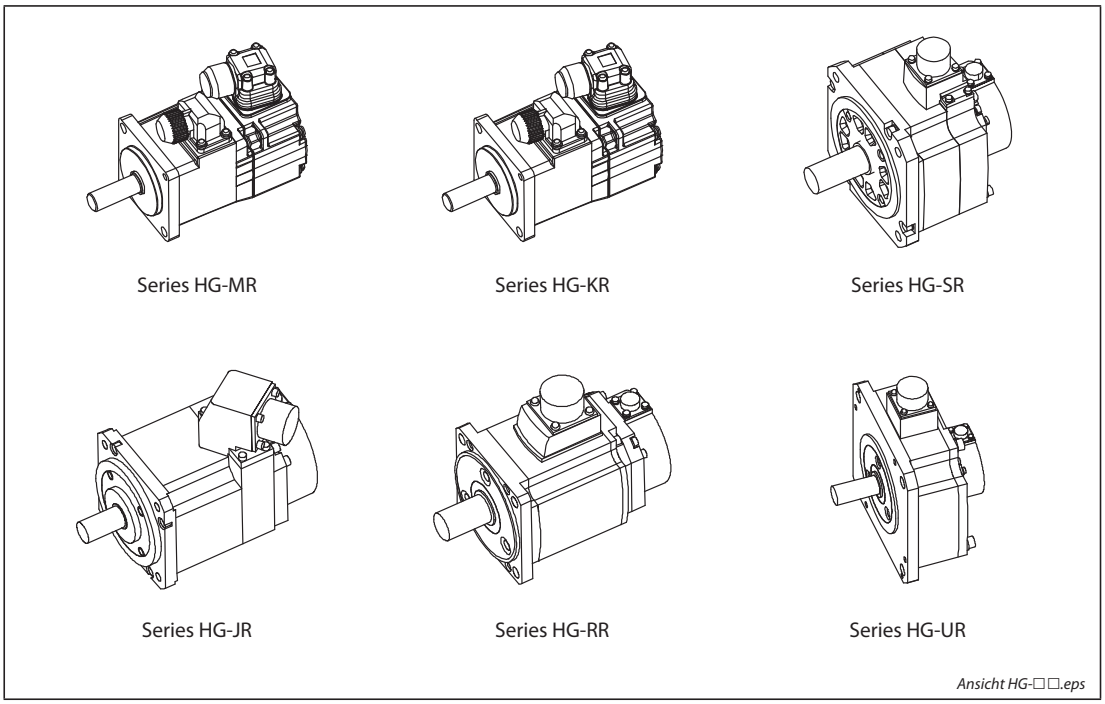

Fig. 3-1: *Rotatory servo motors*

3.1.2 Rating plate

The rating plate of the servo motor HG-JR153 is shown below.
This rating plate is representative of all other servo motor models.

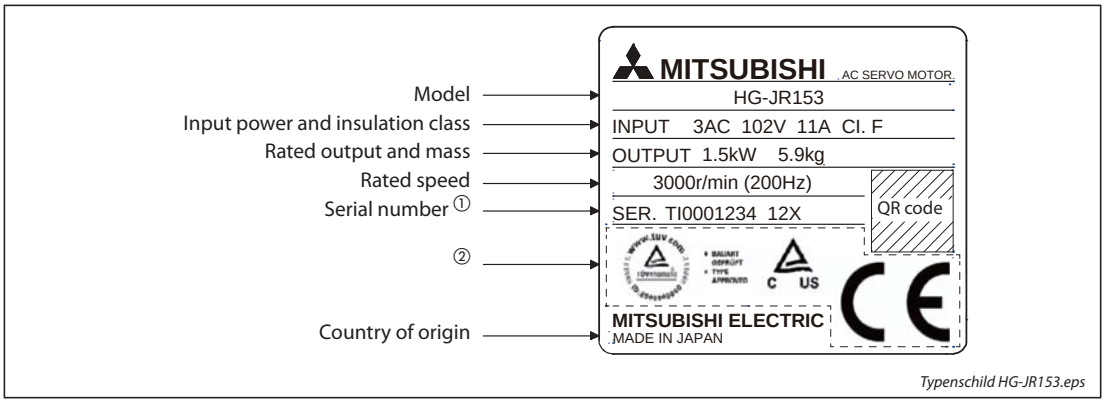

Fig. 3-2: *Rating plate HG-JR153*

① Production year and month of the servo motor are indicated in a serial number on the rating plate.
The year and month are indicated by the last two digits of the year and one digit of the month [1 to 9, X(10), Y(11), and Z(12)].
For January 2012, the Serial No. is like, "SER. _ _ _ _ _ _ _ _ _ 121".

② Products approved by Certification Bodies are marked. The marks depends on the Certification Bodies.

NOTE All rotary servo motors meet the standards CE, UL and CSA.

3.1.3 Servo motor series HG-MR and HG-KR

- Model HG-MR – Ultra-low inertia/small capacity

  Small motor inertia moment makes this unit well suited for high-dynamic positioning operations with extra small cycle times.

  Application example

  – Inserters, mounters, bonders
  – Printed board hole openers
  – In-circuit testers
  – Label printers
  – Knitting and embroidery machinery
  – Ultra-small robots and robot tips

- Model HG-KR – Low inertia/small capacity

  Larger motor inertia moment makes this unit well suited for machines with fluctuating load inertia moment or machines with low rigidity such as conveyors.

  Application example

  – Conveyors
  – Food preparation machinery
  – Printers
  – Small loaders and unloaders
  – Small robots and component assembly devices
  – Small X-Y tables
  – Small press feeders

Model designation

HG-MR □ 3 □

Code	Electromagnetic brake
—	—
B	✔

Code	Rated speed [1/min]
3	3000

Code	Rated output [W]
05	50
1	100
2	200
4	400
7	750

Series name	Feature
HG-MR	Ultra-Low inertia/Small capacity
HG-KR	Low inertia/Small capacity

Fig. 3-3: *Model designation of the servo motor series HG-MR and HG-KR*

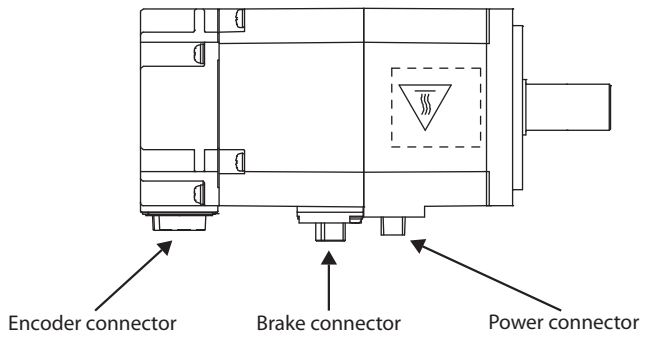

Fig. 3-4: *Servo motor series HG-MR and HG-KR*

NOTE Servo motors without electromagnetic brake have no brake connector.

3.1.4 Servo motor series HG-SR

Model HG-SR – Medium inertia/medium capacity

Stable control is performed from low to high speeds, enabling this unit to handle a wide range of applications (e.g. direct connection to ball screw components).

Application example

- Conveyor machinery
- Specialised machinery
- Robots
- Loaders and unloaders
- Winders and tension devices
- Turrets
- X-Y tables
- Test devices

Model designation

HG-SR □ □ □ □

Series name
HG-SR

Code	Electromagnetic brake
—	—
B	✔

Code	Voltage [V]
—	200–240 V AC, 3-phase
4	380–480 V AC, 3-phase

Code	Rated speed [1/min]
1	1000
2	2000

Code	Rated output [W]	1000 [1/min]	2000 [1/min]
5	500	✔	✔
8	850	✔	—
10	1000	—	✔
12	1200	✔	—
15	1500	—	✔
20	2000	✔	✔
30	3000	✔	—
35	3500	—	✔
42	4200	✔	—
50	5000	—	✔
70	7000	—	✔

Fig. 3-5: *Model designation of servo motors series HG-SR*

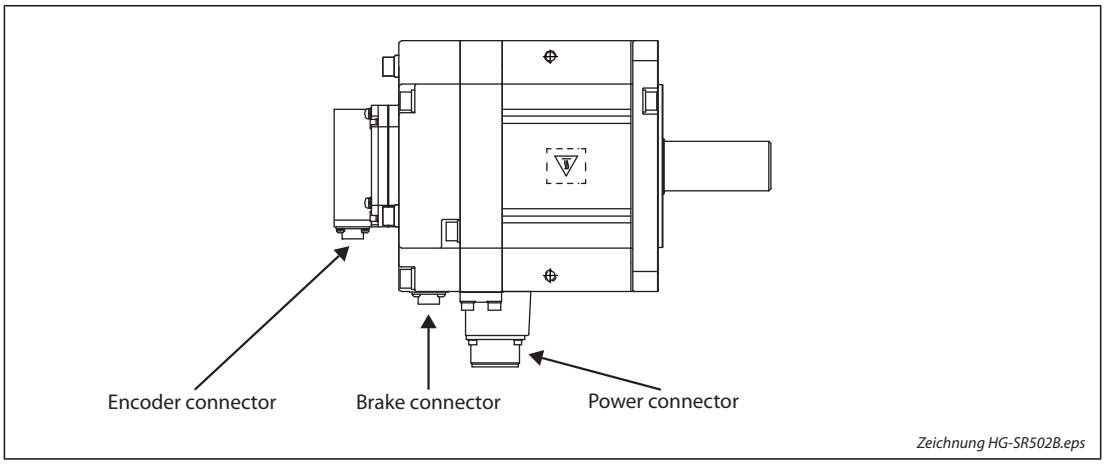

Fig. 3-6: *Servo motor series HG-SR*

NOTE Servo motors without electromagnetic brake have no brake connector.

3.1.5 Servo motor series HG-JR

Model HG-JR – Low inertia/medium capacity

This medium/large capacity, low inertia servo motor is suitable for high-throughput and high-acceleration/deceleration operations.

Application example

- Packaging machines
- Printing machines
- Palletizing machines
- Press machines
- Injection moulding machines

Model designation

HG-JR □ □ □ □

Series name
HG-JR

Code	Electromagnetic brake
—	—
B	✔

Code	Voltage [V]
—	200–240 V AC, 3-phase
4	380–480 V AC, 3-phase

Code	Rated speed [1/min]
1	1000
1M	1500
3	3000

Code	Rated output [W]
5	500
7	750
10	1000
15	1500
20	2000
35	3500
50	5000
60	6000
70	7000
80	8000
90	9000
11K	11000
12K	12000
15K	15000
20K	20000
22K	22000
25K	25000

Fig. 3-7: *Model designation of servo motors series HG-JR*

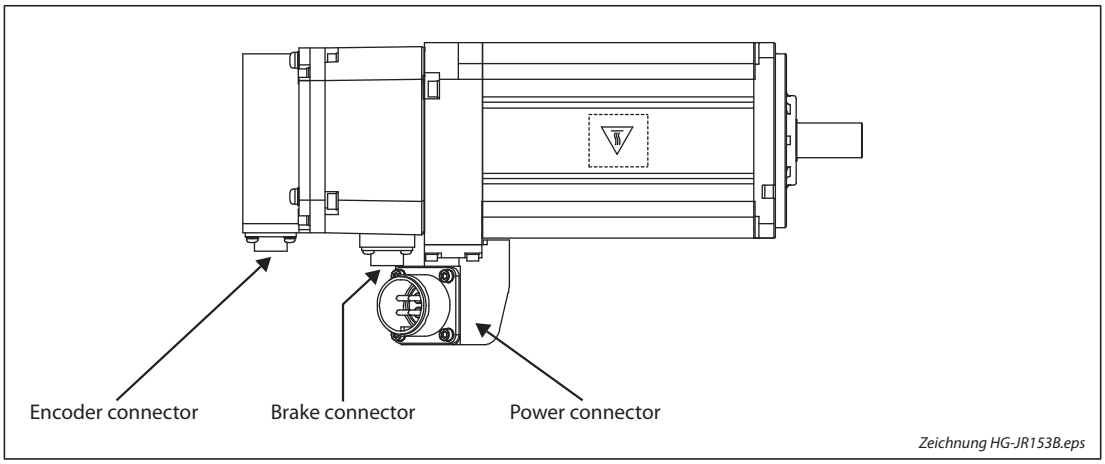

Fig. 3-8: *Servo motor series HG-JR*

NOTES

Servo motors without electromagnetic brake have no brake connector.

The 1500 r/min series servo motor of 22 kW or more and 1000 r/min series servo motor of 15 kW or more are not available with an electromagnetic brake.

3.1.6 Servo motor series HG-RR

Model HG-RR – Ultra-low inertia/medium capacity

This medium capacity, ultra-low inertia servo motor is perfect for high-throughput operations.

Application example

- Ultra-high-throughput machines
- Cutter
- high-frequency conveyor machines

Model designation

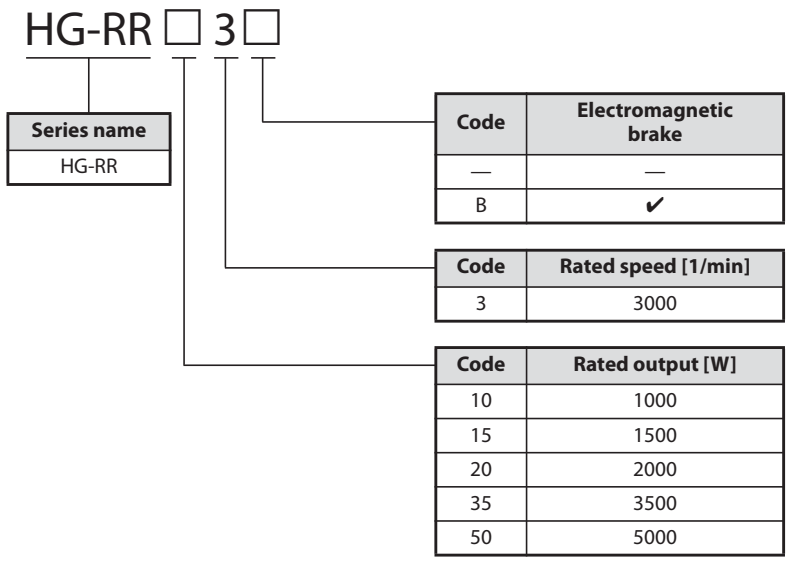

Series name
HG-RR

Code	Electromagnetic brake
—	—
B	✔

Code	Rated speed [1/min]
3	3000

Code	Rated output [W]
10	1000
15	1500
20	2000
35	3500
50	5000

Fig. 3-9: *Model designation of servo motors series HG-RR*

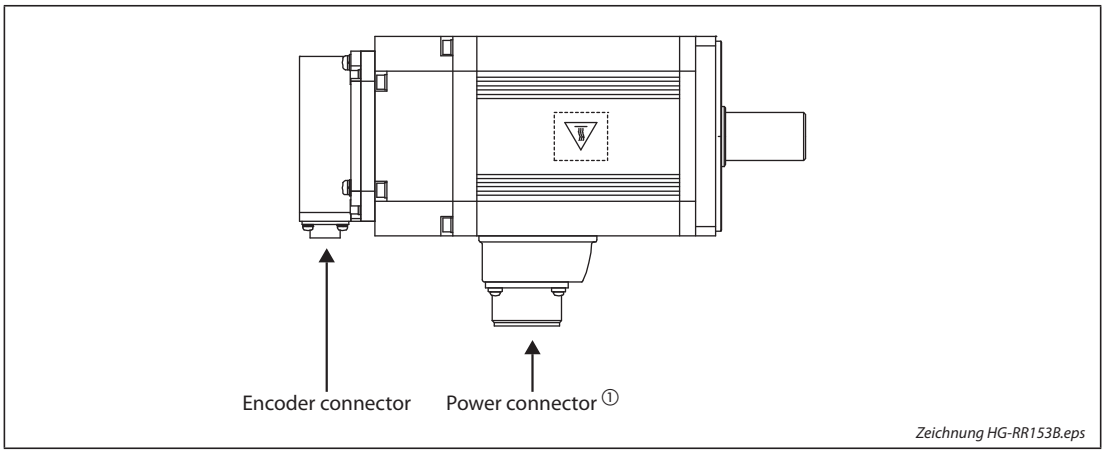

Fig. 3-10: *Servo motor series HG-RR*

① The brake connector is combined with the power connector.

NOTE Servo motors without electromagnetic brake have no brake connector.

3.1.7 Servo motor series HG-UR

Model HG-UR – Flat type/medium capacity

This medium capacity, flat type servo motor is well suited for situations where the installation space is limited.

Application example

- Robots
- Material handling
- Food processing machines

Model designation

HG-UR □2□

Series name
HG-UR

Code	Electromagnetic brake
—	—
B	✔

Code	Rated speed [1/min]
2	2000

Code	Rated output [W]
7	750
15	1500
20	2000
35	3500
50	5000

Fig. 3-11: *Model designation of servo motors series HG-UR*

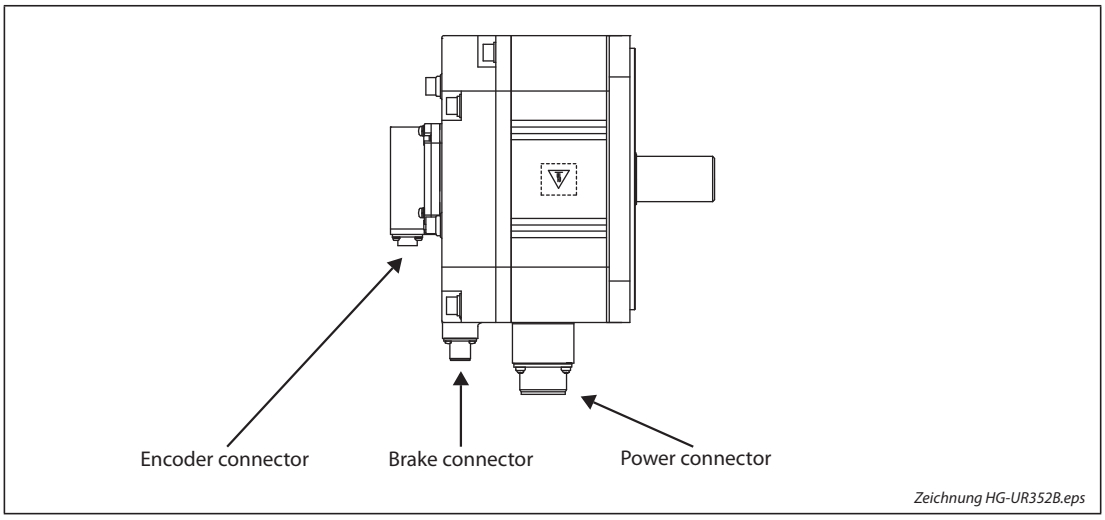

Fig. 3-12: *Servo motor series HG-UR*

NOTE Servo motors without electromagnetic brake have no brake connector.

3.2 Linear servo motors

3.2.1 Model overview

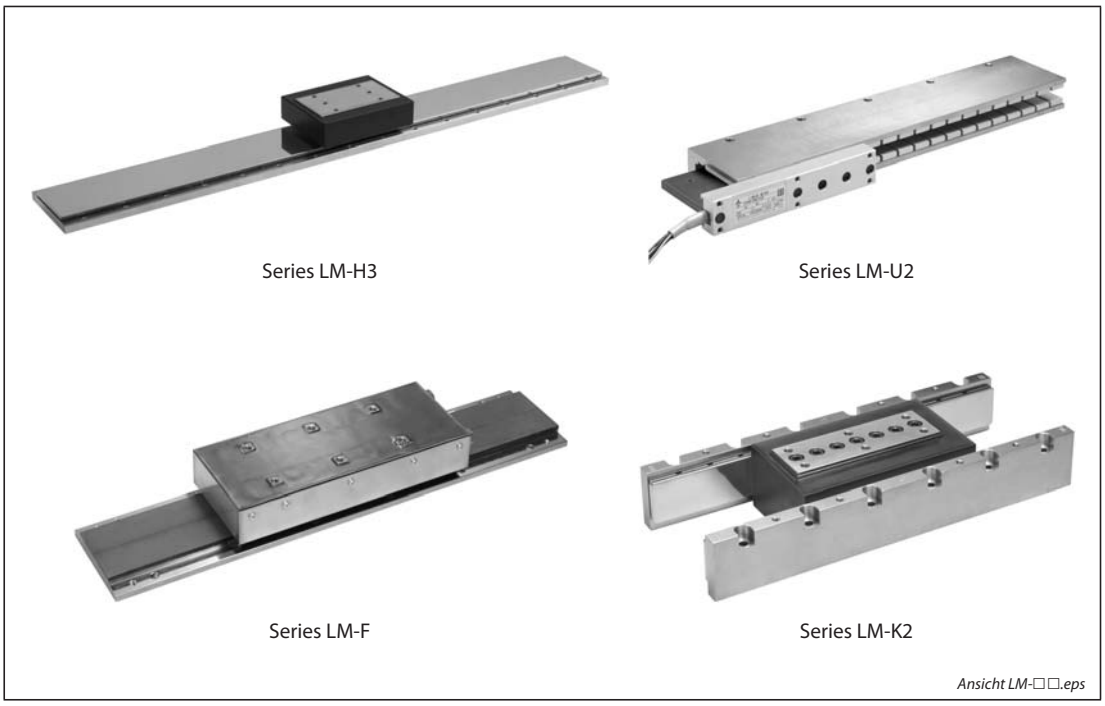

Fig. 3-13: *Linear servo motors*

3.2.2 Rating plate (primary side – coil)

The rating plate of the linear servo motor LM-H3P3A-12P-CSS0 is shown below.
This rating plate is representative of all other linear motor models.

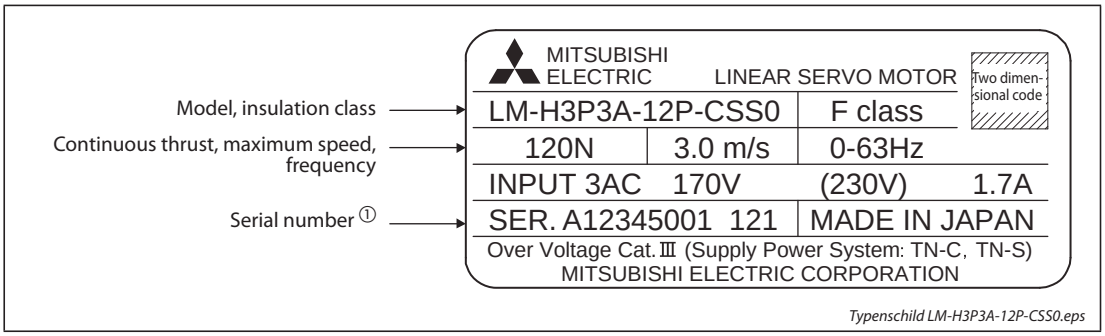

Fig. 3-14: *Rating plate LM-H3P3A-12P-CSS0*

① Production year and month of the primary side of linear servo motor are indicated in a serial number on the rating plate.
The year and month are indicated by the last two digits of the year and one digit of the month [1 to 9, X(10), Y(11), and Z(12)].
For January 2012, the Serial No. is like, "SER. _ _ _ _ _ _ _ _ _ 121".

NOTE All linear servo motors meet the standards CE, UL and CSA.

3.2.3 Servo motor series LM-H3

The core type linear servo motor LM-H3 is suitable for space-saving, high speed and high acceleration/ deceleration.

Application example

- Mounting systems
- Material handlings
- High speed linear transportation systems

Model designation

LM-H3P □ □ - □ P - □

Series name
LM-H3

Code	Side
P	Primary side (coil)

Code	Width [mm] (nominal dimensions)
2	50
3	65
7	100

Code	Length [mm] (nominal dimensions)
A	128
B	224
C	320
D	416

Code	Linear servo motor model
BSS0	LM-H3P2A-07P
CSS0	LM-H3P3A-12P
	LM-H3P3B-24P
	LM-H3P3C-36P
	LM-H3P3D-48P
ASS0	LM-H3P7A-24P
	LM-H3P7B-48P
	LM-H3P7C-72P
	LM-H3P7D-96P

Code	Maximum speed [m/s]
P	3.0

Code	Continuous thrust [N]
07	70
12	120
24	240
36	360
48	480
72	720
96	960

Fig. 3-15: *Model designation of servo motors series LM-H3 (Primary side – coil)*

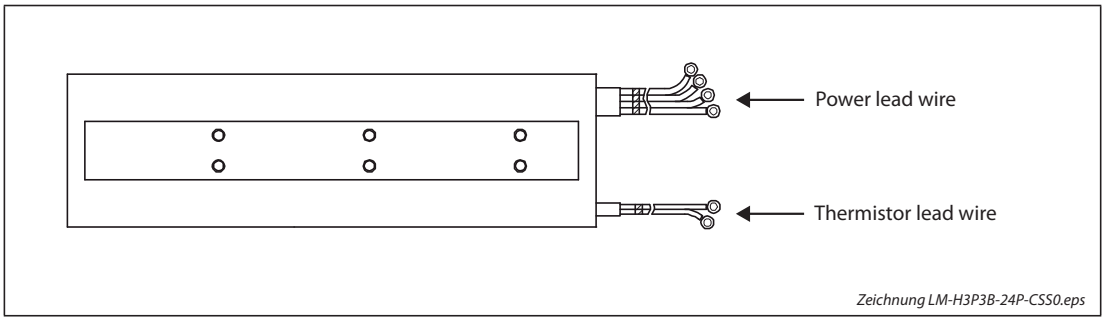

Fig. 3-16: *Servo motor series LM-H3 (Primary side – coil)*

3.2.4 Servo motor series LM-U2

The characteristics of the linear servo motor LM-U2 are no cogging and a small speed fluctuation. Due to the missing magnetic attraction force the life time of the linear guides is longer.

Application example

- Material handlings
- Inspection systems
- Scanning exposure systems
- Screen printing systems

Model designation

LM-U2P □□ - □M - □

Series name
LM-U2

Code	Side
P	Primary side (coil)

Code	Width [mm] (nominal dimensions)
A	66.5
B	86.5

Code	Length [mm] (nominal dimensions)
B	130
D	250
F	370

Code	Linear servo motor model
0SS0	LM-U2PAB-05M
	LM-U2PAD-10M
	LM-U2PAF-15M
1SS0	LM-U2PBB-07M
	LM-U2PBD-15M
	LM-U2PBF-22M

Code	Maximum speed [m/s]
M	2.0

Code	Continuous thrust [N]
05	50
07	75
10	100
15	150
22	225

Fig. 3-17: *Model designation of servo motors series LM-U2 (Primary side – coil)*
Medium thrust series

LM-U2P2 □ - □ M - 2SS0

Series name
LM-U2

Code	Side
P	Primary side (coil)

Code	Length [mm] (nominal dimensions)
B	286
C	406
D	526

Code	Maximum speed [m/s]
M	2.0

Code	Continuous thrust [N]
40	400
60	600
80	800

Fig. 3-18: *Model designation of servo motors series LM-U2 (Primary side – coil)*
Large thrust series

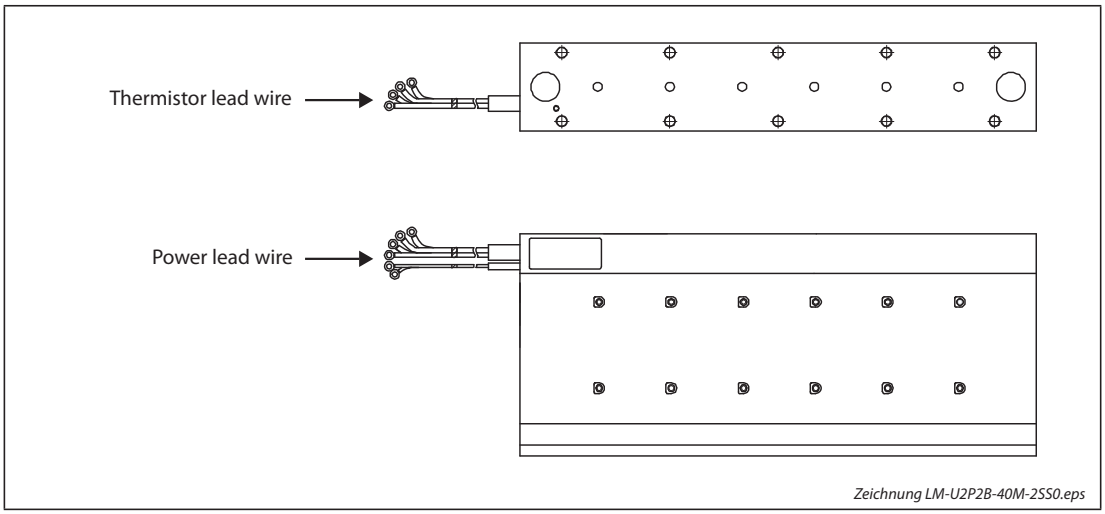

Fig. 3-19: *Servo motor series LM-U2 (Primary side – coil)*

3.2.5 Servo motor series LM-F

The linear servo motor LM-F has a compact core and the integrated liquid-cooling system doubles the continuous thrust.

Application example

- NC machine tools
- Material handlings
- Press feeders

Model designation

LM-FP□□-□M-1SS0

Series name
LM-F

Code	Side
P	Primary side (coil)

Code	Width [mm] (nominal dimensions)
2	120
4	200

Code	Length [mm] (nominal dimensions)
B	290
D	530
F	770
H	1010

Code	Maximum speed [m/s]
M	2.0

Code	Continuous thrust [N]	
	Natural cooling	Liquid cooling
06	300	600
12	600	1200
18	900	1800
24	1200	2400
36	1800	3600
48	2400	4800
60	3000	6000

Fig. 3-20: *Model designation of servo motors series LM-F (Primary side – coil)*

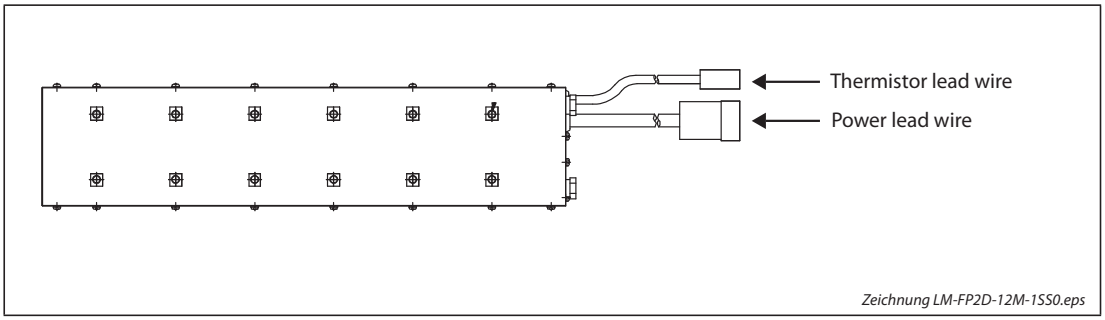

Fig. 3-21: *Servo motor series LM-F (Primary side – coil)*

3.2.6 Servo motor series LM-K2

Due to the magnetic attraction counter-force structure the servo motor LM-K2 has a longer life of the linear guides. During operation the audible noise is low.

Application example

- Mounting systems
- Assembly systems

Model designation

LM-K2P □ □ - □ M - □

Series name
LM-K2

Code	Side
P	Primary side (coil)

Code	Height [mm] (nominal dimensions)
1	54
2	74.5
3	114.5

Code	Length [mm] (nominal dimensions)
A	138
C	330
E	522

Code	Linear servo motor model
2SS1	LM-K2P1A-01M
	LM-K2P1C-03M
1SS1	LM-K2P2A-02M
	LM-K2P2C-07M
	LM-K2P2E-12M
	LM-K2P3C-14M
	LM-K2P3E-24M

Code	Maximum speed [m/s]
M	2.0

Code	Continuous thrust [N]
01	120
02	240
03	360
07	720
12	1200
14	1440
24	2400

Fig. 3-22: *Model designation of servo motors series LM-K2 (Primary side – coil)*

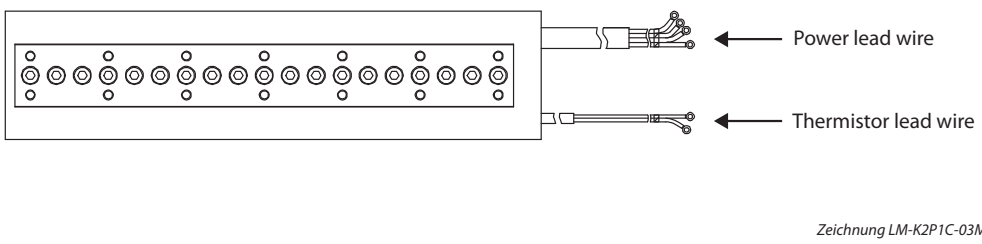

Fig. 3-23: *Servo motor series LM-K2 (Primary side – coil)*

3.3 Direct drive servo motors

3.3.1 Model overview

Series TF-RFM

Ansicht TF-RFM.eps

Fig. 3-24: *Direct drive servo motor*

3.3.2 Rating plate (primary side – coil)

The rating plate of the direct drive servo motor TM-RFM002C20 is shown below.
This rating plate is representative of all other direct drive motor models.

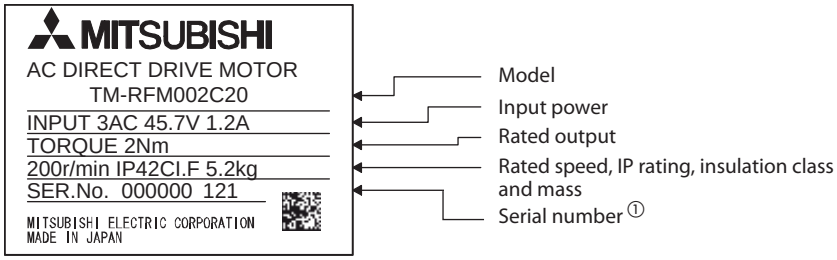

Typenschild TM-RFM002C20.eps

Fig. 3-25: *Rating plate TM-RFM002C20*

① Production year and month of the direct drive motor are indicated in a serial number on the rating plate.
The year and month are indicated by the last two digits of the year and one digit of the month [1 to 9, X(10), Y(11), and Z(12)].
For January 2012, the Serial No. is like, "SER. _ _ _ _ _ _ _ _ _ 121".

NOTE All direct drive servo motors meet the standard CE.

3.3.3 Servo motor series TF-RFM

The magnetic design and winding technology of the servo motor TF-RFM enables high torque density. In addition, extremely smooth rotation is achieved by minimizing the torque ripple. The motor is suitable for low-speed and high-torque operations. High-accuracy positioning is achieved because the motor is directly connected to the driving part. The servo motor is equipped with a 20-bit high-resolution absolute position encoder (1 048 576 pulses/rev) as standard.

Application example

- Index table for machine tools
- Rotary axis for material handling robots
- Painting and vapour deposition systems
- LCD/semiconductor spin-type cleaning systems
- LCD/semiconductor testing systems (XY-tables)
- Rotary axis for polishing systems

Model designation

TM-RFM □□□

Series name
TM-RFM

Code	Rated torque [Nm]
002	2
004	4
006	6
012	12
018	18
040	40
048	48
072	72
120	120
240	240

Code	Rated speed [1/min]
10	100
20	200

Code	Motor OD (Frame OD) Dimensions [mm]
C	Ø 130
E	Ø 180
G	Ø 230
J	Ø 330

Fig. 3-26: *Model designation of servo motors series TM-RFM*

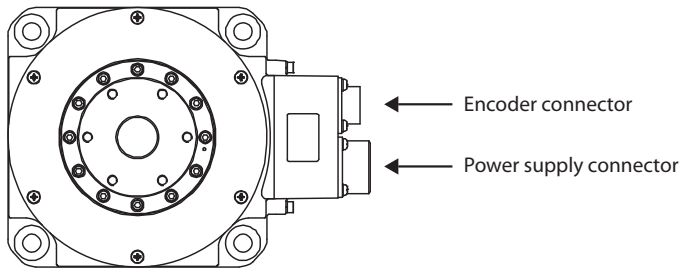

Fig. 3-27: *Servo motor series TM-RFM*

4 Installation and wiring

DANGER:

Before starting wiring, switch power off, then wait for more than 15 minutes, and after the charge lamp has gone off, make sure that the voltage is safe with a tester or like. Otherwise, you may get an electric shock.

4.1 Wiring of power supply, motor and PE terminal

The power supply of some models of the servo amplifier series MR-J4 can either be 1-phase or 3-phase AC voltage (200 V class), while others can only be powered by 3-phase power supply (200 V/400 V class).

Power supply of MR-J4-10A(-RJ)/B(-RJ)/GF(-RJ)/TM to MR-J4-200A(-RJ)/B(-RJ)/GF(-RJ)/TM

Item	1-phase ①	3-phase
Main circuit power supply	L1, L3	L1, L2, L3
Control circuit power supply	L11, L21 ②	
Voltage	200–240 V AC	
Permissible voltage fluctuation	170–264 V AC	
Frequency	50 Hz/60 Hz ±5%	

Power supply of MR-J4-350A(-RJ)/B(-RJ)/GF(-RJ)/TM to MR-J4-22KA(-RJ)/B(-RJ)/GF(-RJ)/TM

Item	3-phase ③
Main circuit power supply	L1, L2, L3
Control circuit power supply	L11, L21 ②
Voltage	200–240 V AC
Permissible voltage fluctuation	170–264 V AC
Frequency	50 Hz/60 Hz ±5%

① When using 1-phase 200 V AC to 240 V AC power supply, operate the servo amplifier MR-J4-100A(-RJ), MR-J4-200A(-RJ), MR-J4-100B(-RJ), MR-J4-200B(-RJ), MR-J4-100GF(-RJ), MR-J4-200GF(-RJ), MR-J4-100TM or MR-J4-200TM at 75% or smaller effective load ratio.

② The power supply of the control circuit is connected to L11 and L21. For 3-phase connection of the main circuit power supply L11 should be in phase with L1 and L21 in phase with L2, for 1-phase connection L11 should be in phase with L1 and L21 in phase with L3.

③ It is not possible, to connect these models only to one phase.

Power supply of MR-J4-60A4(-RJ)/B4(-RJ)/GF4(-RJ)/TM4 to MR-J4-22KA4(-RJ)/B4(-RJ)/GF4(-RJ)/TM4

Item	3-phase ②
Main circuit power supply	L1, L2, L3
Control circuit power supply	L11, L21 ①
Voltage	380–480 V AC
Permissible voltage fluctuation	323–528 V AC
Frequency	50 Hz/60 Hz ±5%

Power supply of MR-J4W2-22B to MR-J4W2-77B, MR-J4W3-222B and MR-J4W3-444B

Item	1-phase	3-phase
Main circuit power supply	L1, L3	L1, L2, L3
Control circuit power supply	L11, L21 ①	
Voltage	200–240 V AC	
Permissible voltage fluctuation	170–264 V AC	
Frequency	50 Hz/60 Hz ±5%	

Power supply of MR-J4W2-1010B

Item	3-phase ②
Main circuit power supply	L1, L2, L3
Control circuit power supply	L11, L21 ①
Voltage	200–240 V AC
Permissible voltage fluctuation	170–264 V AC
Frequency	50 Hz/60 Hz ±5%

① The power supply of the control circuit is connected to L11 and L21. For 3-phase connection of the main circuit power supply L11 should be in phase with L1 and L21 in phase with L2, for 1-phase connection L11 should be in phase with L1 and L21 in phase with L3.

② It is not possible, to connect these models only to one phase.

The power supply with 1-phase is connected to the terminals L1 and L3, with 3-phase to terminals L1, L2 and L3.

The motor is connected to terminals U, V and W.

Additionally the servo amplifier must be grounded via the PE terminal (Protective Earth).

NOTE

Even if the servo amplifier is supplied with an 1-phase AC voltage of 200 to 240 V the servo motor is connected in the same way to the output of the servo amplifier as with a 3-phase power supply. The power supply from the servo amplifier to the servo motor is always 3 phase.

WARNING:

- ***Do not connect AC power supply directly to the output terminals U, V and W of the servo amplifier. Permanent damage of the servo amplifier as well as an immediate danger to the operator would be the consequence.***
- ***Connect the 1-phase 200 V AC to 240 V AC power supply to L1 and L3. One of the connecting destinations is different from MR-J3 Series Servo Amplifier's. When using MR-J4 as a replacement for MR-J3, be careful not to connect the power to L2.***

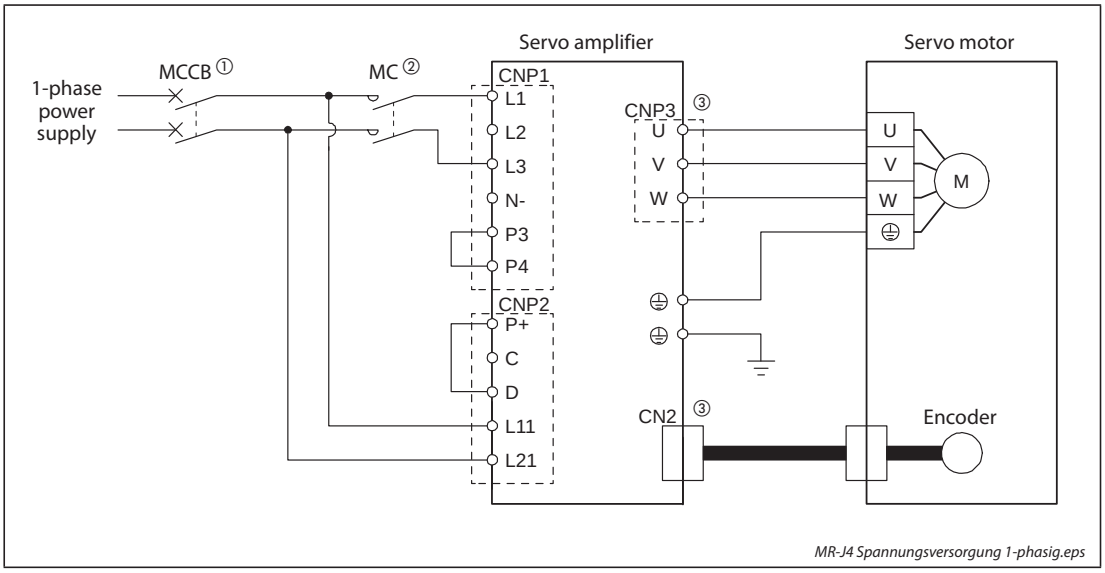

Fig. 4-1: *Wiring of the power inputs and outputs of the servo amplifier (1-phase power supply)*

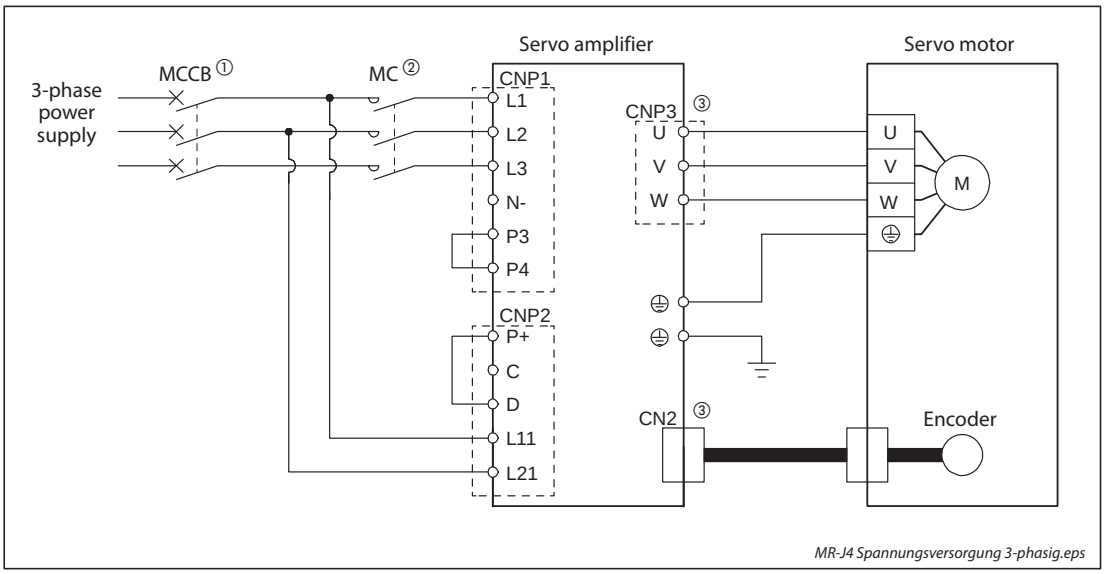

Fig. 4-2: *Wiring of the power inputs and outputs of the servo amplifier (3-phase power supply)*

① MCCB = Molded-case circuit breaker

② MC = Magnetic contactor

③ The MR-J4 2-axis servo amplifier (MR-J4W2-B) has two motor outputs (CNP3A, CNP3B) and two encoder inputs (CN2A, CN2B). The MR-J4 3-axis servo amplifier (MR-J4W3-B) has three motor outputs (CNP3A, CNP3B, CNP3C) and three encoder inputs (CN2A, CN2B, CN2C).

Abbreviation	Terminals	Description
L1, L3	Main circuit power supply (1-phase)	Power supply of the servo amplifier (main circuit)
L1, L2, L3	Main circuit power supply (3-phase)	
U, V, W	Servo motor power output	Voltage output of the servo amplifier
L11, L21	Control circuit power supply	Power supply of the control circuit
P+, C, D	Regenerative option	Terminals P+ and –D are wired by default. When using regenerative option, disconnect the P+ and D terminals and connect the regenerative option to P+ terminal and C terminal.
P3, P4	Power factor improving DC reactor	When not using the power factor improving DC reactor, connect P3 and P4. (factory-wired). When using the power factor improving DC reactor, disconnect P3 and P4, and connect the power factor improving DC reactor to P3 and P4.
N–	Power regeneration converter Power regeneration common converter Brake unit	This terminal is used for a power regeneration converter, power regeneration common converter and brake unit.
⏚	Protective earth (PE)	Connect it to the grounding terminal of the servo motor and to the protective earth (PE) of the cabinet for grounding.

Tab. 4-1: *Power terminals of the servo amplifier*

NOTE

Please refer to the respective instruction manual of the servo amplifier series MR-J4-A, MR-J4-B,MR-J4-GF, MR-J4-TM, MR-J4W2-B and MR-J4W3-B for details about different terminal designations of specific servo amplifier models.

4.2 Connectors and signal arrangements

Apart from the terminals of the power unit for supply voltage and motor, a servo amplifier is equipped with even more terminals for controlling the servo amplifier. These additional terminals are used for the safety function (STO), to connect an optional PC, to connect an optional battery and for monitoring, diagnosis and so on.

4.2.1 Servo amplifier series MR-J4-A

The shown front view is that of the servo amplifier MR-J4-20A-RJ or less. For all models of the MR-J4-A series the terminal configuration is the same.

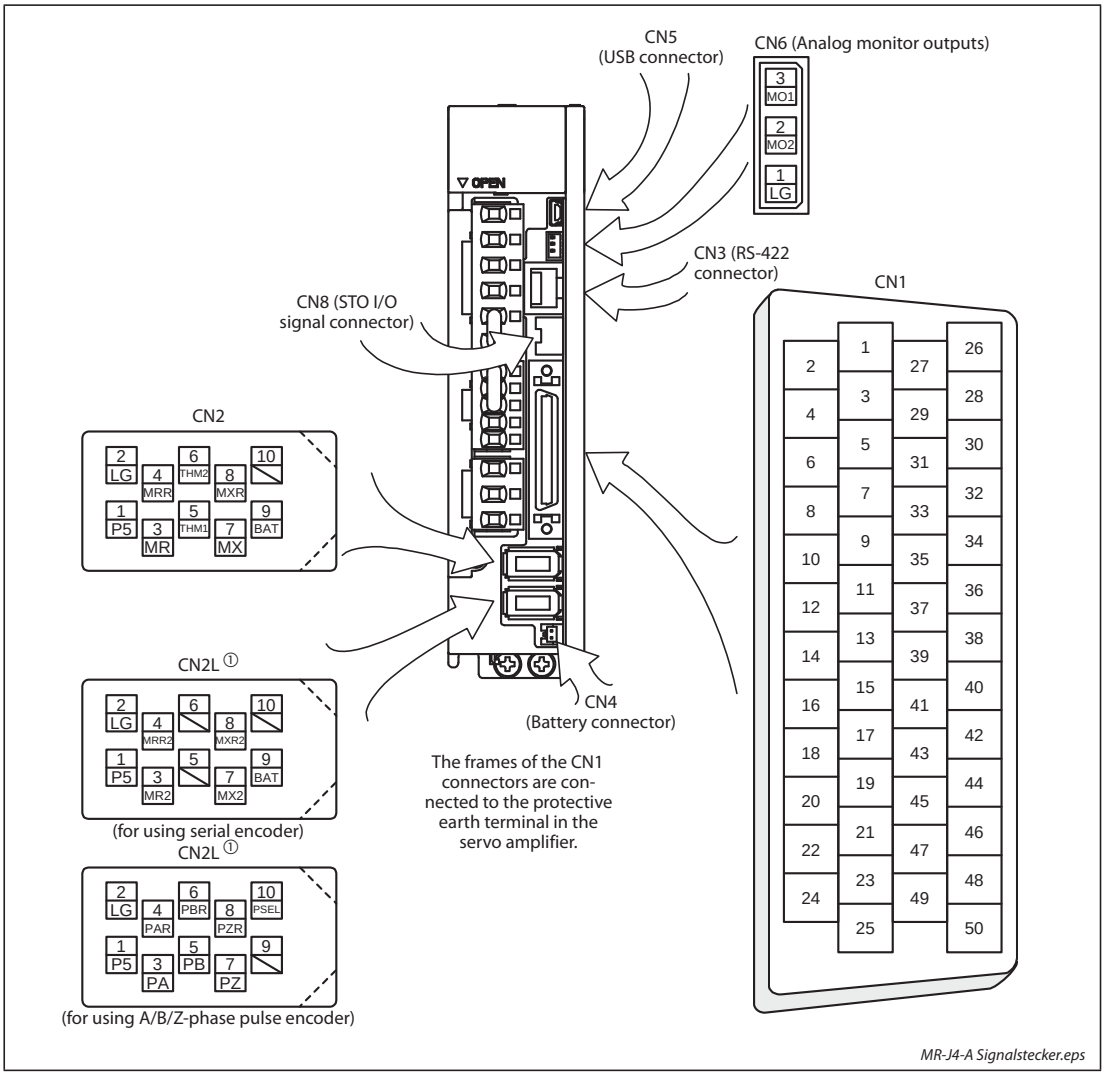

Fig. 4-3: *MR-J4-A signal arrangement*

① The MR-J4-□A(4)-RJ servo amplifiers have CN2L connectors.

Signal assignment

Connector	Name	Description
CN1	I/O devices	Control interface (see tab. 4-3)
CN2	Encoder connector	Connector for the servo motor encoder
CN2L ①		Connector for external encoder (Serial encoder or A/B/Z-phase pulse encoder)
CN3	Communication (RS-422)	Connector for a personal computer (PC)
CN4	Battery terminal	For connecting the battery (MR-BAT6V1SET-A) to store the data of the absolute position detection (observe the following note). When you want to connect the battery, disconnect the power supply of the main circuit and wait for more than 15 minutes, after the charge lamp has gone off. When replacing the battery, leave the power supply of the control circuit on and disconnect only the supply voltage of the main circuit. Otherwise, the absolute position data will be lost.
CN5	Communication (USB)	Connector for a personal computer (PC)
CN6	Analog monitor outputs	This is used to output data selected by parameters as an analog voltage for measuring instruments or the like.
CN8	STO connector	Connector for safety function (Safe Torque Off)

Tab. 4-2: *Description of CN1, CN2, CN2L, CN3, CN4, CN5, CN6 and CN8*

① The MR-J4-□A(4)-RJ servo amplifiers have CN2L connectors.

NOTE

The MR-BAT6V1BJ battery for junction battery cable is only for the HG series servo motors. It cannot be used with direct drive motors. Do not use the MR-BAT6V1BJ battery for junction battery cable in the fully closed loop system.

The device assignment of the CN1 connector pins changes depending on the control mode. For the pins which are given parameters in the related parameter column, their devices will be changed using those parameters.

Pin No.	Signal I/O ①	I/O signals in control modes ②						Pr.
		P	P/S	S	S/T	T	T/P	
1	—	P15R	P15R	P15R	P15R	P15R	P15R	—
2	I	—	—/VC	VC	VC/VLA	VLA	VLA/—	—
3	—	LG	LG	LG	LG	LG	LG	—
4	O	LA	LA	LA	LA	LA	LA	—
5	O	LAR	LAR	LAR	LAR	LAR	LAR	—
6	O	LB	LB	LB	LB	LB	LB	—
7	O	LBR	LBR	LBR	LBR	LBR	LBR	—
8	O	LZ	LZ	LZ	LZ	LZ	LZ	—
9	O	LZR	LZR	LZR	LZR	LZR	LZR	—
10	I	PP	PP/—	—	—	—	—/PP	—
11	I	PG	PG/—	—	—	—	—/PG	—
12	—	OPC	OPC/—	—	—	—	—/OPC	—
13	—	—	—	—	—	—	—	—
14	—	—	—	—	—	—	—	—
15	I	SON	SON	SON	SON	SON	SON	PD03/PD04
16	I	—	—/SP2	SP2	SP2/SP2	SP2	SP2/—	PD05/PD06

Tab. 4-3: *Signal arrangement of CN1 in MR-J4-A (1)*

Pin No.	Signal I/O ①	I/O signals in control modes ②						Pr.
		P	P/S	S	S/T	T	T/P	
17	I	PC	PC/ST1	ST1	ST1/RS2	RS2	RS2/PC	PD07/PD08
18	I	TL	TL/ST2	ST2	ST2/RS1	RS1	RS1/TL	PD09/PD10
19	I	RES	RES	RES	RES	RES	RES	PD11/PD12
20	—	DICOM	DICOM	DICOM	DICOM	DICOM	DICOM	—
21	—	DICOM	DICOM	DICOM	DICOM	DICOM	DICOM	—
22	O	INP	INP/SA	SA	SA/—	—	—/INP	PD23
23	O	ZSP	ZSP	ZSP	ZSP	ZSP	ZSP	PD24
24	O	INP	INP/SA	SA	SA/—	—	—/INP	PD25
25	O	TLC	TLC	TLC	TLC/VLC	VLC	VLC/TLC	PD26
26	—	—	—	—	—	—	—	—
27	I	TLA	TLA ③	TLA ③	TLA/TC ③	TC	TC/TLA	—
28	—	LG	LG	LG	LG	LG	LG	—
29	—	—	—	—	—	—	—	—
30	—	LG	LG	LG	LG	LG	LG	—
31	—	—	—	—	—	—	—	—
32	—	—	—	—	—	—	—	—
33	O	OP	OP	OP	OP	OP	OP	—
34	—	LG	LG	LG	LG	LG	LG	—
35	I	NP	NP/—	—	—	—	—/NP	—
36	I	NG	NG/—	—	—	—	—/NG	—
37	—	—	—	—	—	—	—	—
38	—	—	—	—	—	—	—	—
39	—	—	—	—	—	—	—	—
40	—	—	—	—	—	—	—	—
41	I	CR	CR/SP1	SP1	SP1/SP1	SP1	SP1/CR	PD13/PD14
42	I	EM2	EM2	EM2	EM2	EM2	EM2	—
43	I	LSP	LSP	LSP	LSP/—	—	—/LSP	PD17/PD18
44	I	LSN	LSN	LSN	LSN/—	—	—/LSN	PD19/PD20
45	I	LOP	LOP	LOP	LOP	LOP	LOP	PD21/PD22
46	—	DOCOM	DOCOM	DOCOM	DOCOM	DOCOM	DOCOM	—
47	—	DOCOM	DOCOM	DOCOM	DOCOM	DOCOM	DOCOM	—
48	O	ALM	ALM	ALM	ALM	ALM	ALM	—
49	O	RD	RD	RD	RD	RD	RD	PD28
50	—	—	—	—	—	—	—	—

Tab. 4-3: *Signal arrangement of CN1 in MR-J4-A (2)*

① I: Input signal, O: Output signal

② P: Position control mode, S: Speed control mode, T: Torque control mode, P/S: Position/speed control change mode, S/T: Speed/torque control change mode, T/P: Torque/position control change mode

③ TLA will be available when TL (External torque limit selection) is enabled with parameters PD03 to PD22.

Pin No.	Signal I/O ①	I/O signals in control modes ②			Pr.
		CP	CL	PS	
1	—	P15R	P15R	P15R	—
2	I	VC	VC	VC	—
3	—	LG	LG	LG	—
4	O	LA	LA	LA	—
5	O	LAR	LAR	LAR	—
6	O	LB	LB	LB	—
7	O	LBR	LBR	LBR	—
8	O	LZ	LZ	LZ	—
9	O	LZR	LZR	LZR	—
10	I	DI2	DI2	DI2	PD44
11	I	PG	PG	PG	—
12	—	OPC	OPC	OPC	—
13	O	④	④	④	PD47
14	O	④	④	④	PD47
15	I	SON	SON	SON	PD04
16	I	MD0	MD0	MD0	PD06
17	I	ST1	ST1	ST1	PD08
18	I	ST2	ST2	MD1 ⑤	PD10
19	I	DI0	DI0	DI0	PD12
20	—	DICOM	DICOM	DICOM	—
21	—	DICOM	DICOM	DICOM	—
22	O	CPO ⑥	CPO ⑥	CPO ⑥	PD23
23	O	ZP ⑥	ZP ⑥	ZP ⑥	PD24
24	O	INP	INP	INP	PD25
25	O	MEND ⑥	MEND ⑥	MEND ⑥	PD26
26	—	—	—	—	—
27	I	TLA ③	TLA ③	TLA ③	—
28	—	LG	LG	LG	—
29	—	—	—	—	—
30	—	LG	LG	LG	—
31	—	—	—	—	—
32	—	—	—	—	—
33	O	OP	OP	OP	—
34	—	LG	LG	LG	—
35	I	DI3	DI3	DI3	PD46
36	I	NG	NG	NG	—
37	—	—	—	—	—
38	—	—	—	—	—
39	—	—	—	—	—
40	—	—	—	—	—
41	I	DI1	DI1	DI1	PD14
42	I	EM2	EM2	EM2	—
43	I	LSP	LSP	LSP	PD18
44	I	LSN	LSN	LSN	PD20
45	I	DOG	DOG	SIG	PD22
46	—	DOCOM	DOCOM	DOCOM	—

Tab. 4-4: *Signal arrangement of CN1 in MR-J4-A-RJ (1)*

Pin No.	Signal I/O ①	I/O signals in control modes ②			Pr.
		CP	CL	PS	
47	—	DOCOM	DOCOM	DOCOM	—
48	O	ALM	ALM	ALM	—
49	O	RD	RD	RD	PD28
50	—	—	—	—	—

Tab. 4-4: *Signal arrangement of CN1 in MR-J4-A-RJ (2)*

① I: input signal, O: output signal

② CP: Positioning mode (point table method)
CL: Positioning mode (program method)
PS: Positioning mode (indexer method)

③ TLA will be available when TL (External torque limit selection) is enabled with parameters PD04, PD06, PD08, PD10, PD12, PD14, PD18, PD20, PD22, PD44, and PD46.

④ Assign any device with Parameter PD47.

⑤ Assign MD1 with Parameter PD10.

⑥ Assign the following output devices to CN1-22, CN1-23, and CN1-25 pins with parameters PD23, PD24, and PD26.
CN1-22: CPO (Rough match)
CN1-23: ZP (Home position return completion)
CN1-25: MEND (Travel completion)

Meaning of the symbols

The most important signals are explained in the table below. You will find detailed information about all signals in the instruction manual of the respective servo amplifier.

Signal		Symbol	Name	Description	
Control terminals	Signal inputs	RES	Reset	Turn RES on for more than 50 ms to reset the alarm.	
		LSP	Forward rotation stroke end	To start the Servo motor in both directions of rotation both inputs must be switched on. Turn it off to bring the motor to a sudden stop and make it servo-locked. If one input switches off because the limit switch has been reached, rotary movement is possible only in the opposite direction of the activated limit switch.	
		LSN	Reverse rotation stroke end		
		SON	Servo-on	Turn SON on to power on the main circuit and make the servo amplifier ready to operate (servo-on).	
		ST1	Forward rotation start	If terminal ST1 is switched on, the motor turns in counter-clockwise rotation.	If both ST1 and ST2 are switched on or off during operation, the servo motor will be decelerated to a stop (servo-lock).
		ST2	Reverse rotation start	If terminal ST2 is switched on, the motor turns in clockwise rotation.	
		EM2	Forced stop 2	Turn off EM2 (open between commons) to decelerate the servo motor to a stop with commands. Turn EM2 on (short between commons) in the forced stop state to reset that state.	
		MD0 ②	Operation mode selection 1	• Point table method/program method Turning on MD0 will be automatic operation mode, off will be manual operation mode. Changing an operation mode during operation will clear the command remaining distance and the motor will decelerate to stop. MD1 cannot be used. • Indexer method Select an operation mode with combinations of MD0 and MD1 (refer to the instruction manual). Changing an operation mode during operation will clear the command remaining distance and the motor will decelerate to stop.	
		MD1 ②	Operation mode selection 2		
		DOG ②	Proximity dog	Turning off DOG will detect a proximity dog. The polarity for dog detection can be changed with Parameter PT29.	
	Signal outputs	ALM	Alarm	When an alarm occurs, ALM will turn off. When an alarm does not occur, ALM will turn on after 2.5 s to 3.5 s after power-on.	
		RD	Ready	RD turns on when the servo is switched on and the servo amplifier is ready to operate.	
		INP	In position	INP turns on when the number of droop pulses is in the preset in-position range. INP turns on when servo-on turns on.	
		WNG	Warning	When warning has occurred, WNG turns on. When a warning is not occurring, turning on the power will turn off WNG after 2.5 s to 3.5 s.	
		ACD0 ACD1 ACD2	Alarm code	The alarm code is output as a 3-Bit signal depending on the alarm that occurs. The output of the alarm code has to be activated by parameter PD34.	
		MEND ②	Travel completion	When the droop pulses are within the in-position output range set with Parameter PA10 and the command remaining distance is "0", MEND will be on.	

Tab. 4-5: *Selection of the most important input and output signals of CN1 (1)*

Signal		Symbol	Name	Description	
Analog terminals	Command inputs	TC ①	Analog torque command	Used to control torque in the full servo motor output torque range. Apply 0 to ±8 V DC across TC–LG. Maximum torque is generated at ±8 V. The speed at ±8 V can be changed with Parameter PC13.	
		VC	Analog speed command ②	Apply 0 to ±10 V DC across VC–LG. Speed set in parameter PC12 is provided at ±10 V.	
			Analog override ①	The signal controls the servo motor setting speed by applying –10 V to +10V to between VC and LG. The percentage will be 0% with –10 V, 100% with 0 V, and 200% with +10 V to the setting speed of the servo motor. Resolution: 14 bits or equivalent	
		VLA	Analog speed limit	Setting of speed limit in torque control mode by applying 0 to +10 V. The maximum speed set in parameter PC12 is output at +10 V.	
	Analog output	MO1	Analog monitor 1	Used to output the data set in parameter PC14 to across MO1–LG in terms of voltage.	Resolution: 10 bits or equivalent
		MO2	Analog monitor 2	Used to output the data set in parameter No. PC15 to across MO2–LG in terms of voltage.	
Power supply	Common	DICOM	Input 24 V DC (± 10%, 500 mA) to I/O interface	For sink interface, connect + of 24 V DC external power supply.	
				For source interface, connect – of 24 V DC external power supply.	
		DOCOM	Common terminal of input signal such as EM2 of the servo amplifier. This is separated from LG.	For sink interface, connect – of 24 V DC external power supply.	
				For source interface, connect + of 24 V DC external power supply.	
		LG	This is a common terminal for TLA, TC, VC, VLA, FPA, FPB, OP, MO1, MO2, and P15R		
	P15R		This outputs 15 V DC to between P15R and LG. This is available as power for TC, TLA, VC, or VLA. Permissible current: 30 mA		
	SD		Shielding, housing		

Tab. 4-5: *Selection of the most important input and output signals of CN1 (2)*

① Only for MR-J4-□A

② Only for MR-J4-□A-RJ

4.2.2 Servo amplifier series MR-J4-B

The shown front view is that of servo amplifier MR-J4-20B-RJ or less. The terminal configuration is the same for all models of the MR-J4-B series.

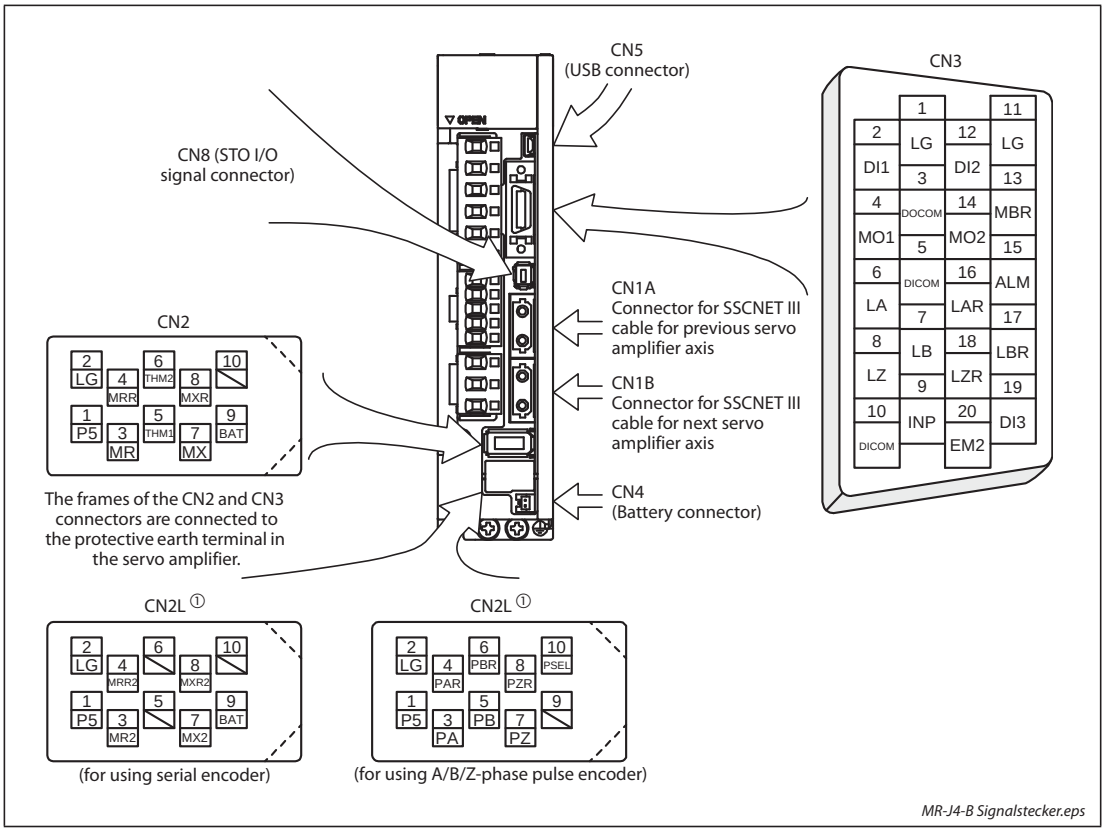

Fig. 4-4: *MR-J4-B signal arrangement*

① The MR-J4-□B(4)-RJ servo amplifiers have CN2L connectors.

Signal assignment

Connector	Name	Description
CN1A	Connector for SSCNET III cable for previous servo amplifier axis	Used for connection with the controller or the servo amplifier of the previous axis.
CN1B	Connector for SSCNET III cable for next servo amplifier axis	Used for connection with the servo amplifier of the next axis. Put a cap on the CN1B connector of the final axis.
CN2	Encoder connector	Connector for the servo motor encoder
CN2L ①		Connector for external encoder (Serial encoder or A/B/Z-phase pulse encoder)
CN3	I/O devices	Control interface (see tab. 4-7)
CN4	Battery terminal	For connecting the battery (MR-BAT6V1SET-A) to store the data of the absolute position detection (observe the following note). When you want to connect the battery, disconnect the power supply of the main circuit and wait for more than 15 minutes, after the charge lamp has gone off. When replacing the battery, leave the power supply of the control circuit on and disconnect only the supply voltage of the main circuit. Otherwise, the absolute position data will be lost.
CN5	Communication (USB)	Connector for a personal computer (PC)
CN8	STO connector	Connector for safety function (Safe Torque Off)

Tab. 4-6: *Description of CN1A, CN1B, CN2, CN2L, CN3, CN4, CN5 and CN8*

① The MR-J4-□B(4)-RJ servo amplifiers have CN2L connectors.

NOTE

The MR-BAT6V1BJ battery for junction battery cable is only for the HG series servo motors. It cannot be used with direct drive motors. Do not use the MR-BAT6V1BJ battery for junction battery cable in the fully closed loop system and scale measurement function.

Signal arrangement of CN3

Pin No.	Signal I/O	Symbol of I/O signal	Assignment with parameter ①	Pin No.	Signal I/O	Symbol of I/O signal	Assignment with parameter ①
1	—	LG	—	11	—	LG	—
2	I	DI1	—	12	I	DI2	—
3	—	DOCOM	—	13	O	MBR ②	PD07
4	O	MO1	—	14	O	MO2	—
5	—	DICOM	—	15	O	ALM ②	PD09
6	—	LA	—	16	—	LAR	—
7	—	LB	—	17	—	LBR	—
8	—	LZ	—	18	—	LZR	—
9	O	INP ②	PD08	19	I	DI3	—
10	—	DICOM	—	20	I	EM2	—

Tab. 4-7: *Signal arrangement of CN3 in MR-J4-B*

① Assignable symbols:

RD	ALM	INP	MBR	DB
TLC	WNG	BWNG	ZSP	CDPS
ABSV	SA	VLC	MTTR	CLDS

② Symbol of initial setting

Meaning of symbols

The most important signals are explained in the table below. You will find detailed information about all signals in the instruction manual of the respective servo amplifier.

Signal		Symbol	Name	Description	
Control terminals	Signal inputs	DI1	—	Devices can be assigned for these signals with controller setting. For devices that can be assigned, refer to the controller instruction manual. The following devices can be assigned for MR-J4 compatible controller (Q172DSCPU, Q173DSCPU, and QD77MS□).	
		DI2			
		DI3			
		EM2	Forced stop 2	Turn off EM2 (open between commons) to decelerate the servo motor to a stop with commands. Turn EM2 on (short between commons) in the forced stop state to reset that state.	
	Signal outputs	ALM	Alarm	When the protective circuit is activated to shut off the base circuit, ALM will turn off. When an alarm does not occur, ALM will turn on after 2.5 s to 3.5 s after power-on.	The signal must first be assigned to a certain output terminal of plug CN3 via parameter setting PD07–PD09.
		RD	Ready	RD turns on when the servo is switched on and the servo amplifier is ready to operate.	
		INP	In position	INP turns on when the number of droop pulses is in the preset in-position range. The device cannot be used in the speed control mode, torque control mode, and for continuous operation to torque control mode.	
		WNG	Warning	When warning has occurred, WNG turns on. When a warning is not occurring, turning on the power will turn off WNG after 2.5 s to 3.5 s.	
Analog terminals	Analog output	MO1	Analog monitor 1	Used to output the data set in parameter PC09 to across MO1–LG in terms of voltage.	Resolution: 10 bits or equivalent
		MO2	Analog monitor 2	Used to output the data set in parameter PC10 to across MO2–LG in terms of voltage.	
Power supply	Common	DICOM	Input 24 V DC (± 10%, 300 mA) to I/O interface	For sink interface, connect + of 24 V DC external power supply.	
				For source interface, connect – of 24 V DC external power supply.	
		DOCOM	Common terminal of input signal such as EM2 of the servo amplifier. This is separated from LG.	For sink interface, connect – of 24 V DC external power supply.	
				For source interface, connect + of 24 V DC external power supply.	
		LG	Common terminal of MO1 and MO2		
		SD	Shielding, housing		

Tab. 4-8: *Selection of the most important input and output signals of CN3*

4.2.3 Servo amplifier series MR-J4W-B

The shown front view is that of the MR-J4 3-axis servo amplifier (MR-J4W3-B). For the MR-J4 2-axis servo amplifier (MR-J4W2-B) connector CN2C is missing.

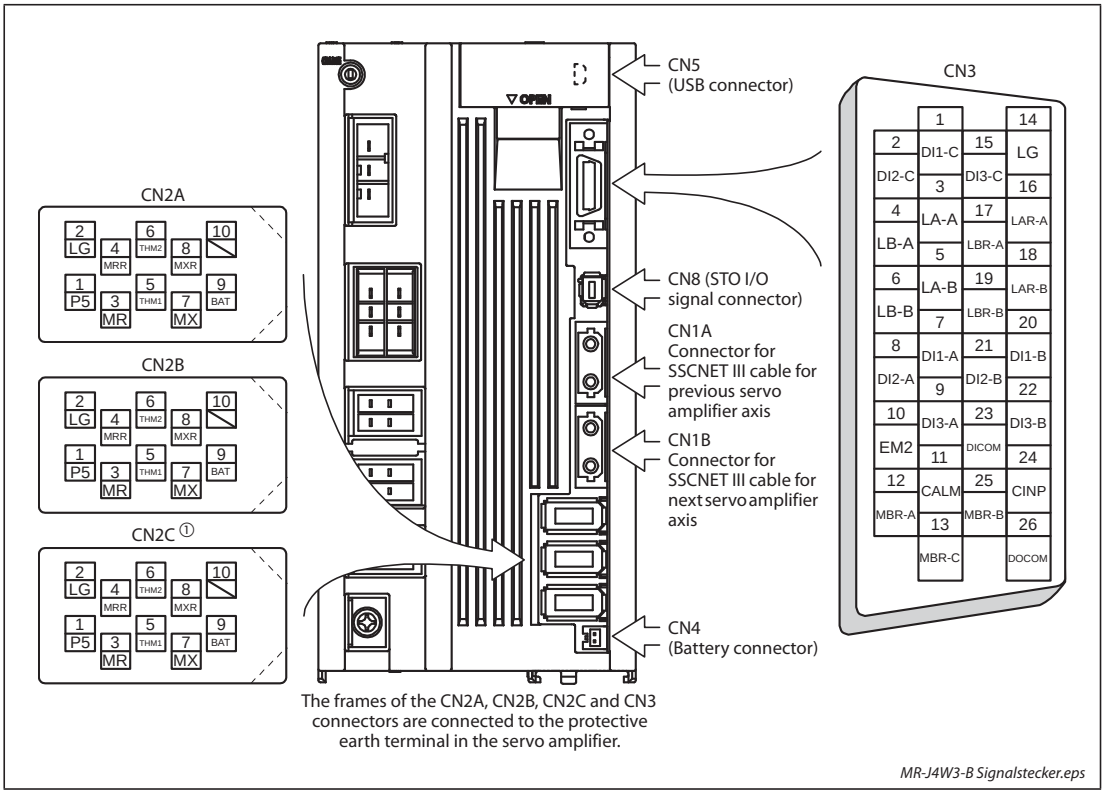

Fig. 4-5: *MR-J4W-B signal arrangement*

① For the MR-J4 3-axis servo amplifier (MR-J4W3-B)

Signal assignment

Connector	Name	Description
CN1A	Connector for SSCNET III cable for previous servo amplifier axis	Used for connection with the controller or the servo amplifier of the previous axis.
CN1B	Connector for SSCNET III cable for next servo amplifier axis	Used for connection with the servo amplifier of the next axis. Put a cap on the CN1B connector of the final axis.
CN2A	Encoder connector	Connector for the servo motor encoder (axis A)
CN2B		Connector for the servo motor encoder (axis B)
CN2C ①		Connector for the servo motor encoder (axis C)
CN3	I/O devices	Control interface (see tab. 4-10)
CN4	Battery terminal	For connecting the battery (the battery unit consists of the MR-BT6VCASE battery case and five MR-BAT6V1 batteries) to store the data of the absolute position detection (observe the following note). When you want to connect the battery, disconnect the power supply of the main circuit and wait for more than 15 minutes, after the charge lamp has gone off. When replacing the battery, leave the power supply of the control circuit on and disconnect only the supply voltage of the main circuit. Otherwise, the absolute position data will be lost.
CN5	Communication (USB)	Connector for a personal computer (PC)
CN8	STO connector	Connector for safety function (Safe Torque Off)

Tab. 4-9: *Description of CN1A, CN1B, CN2A, CN2B, CN2C, CN3, CN4, CN5 and CN8*

① For the MR-J4 3-axis servo amplifier (MR-J4W3-B)

Signal arrangement of CN3

Pin No.	Signal I/O	Symbol of I/O signal	Pin No.	Signal I/O	Symbol of I/O signal
1	I	DI1-C	14	—	LG
2	I	DI2-C	15	I	DI3-C
3	—	LA-A	16	—	LAR-A
4	—	LB-A	17	—	LBR-A
5	—	LA-B	18	—	LAR-B
6	—	LB-B	19	—	LBR-B
7	I	DI1-A	20	I	DI1-B
8	I	DI2-A	21	I	DI2-B
9	I	DI3-A	22	I	DI3-B
10	I	EM2	23	—	DICOM
11	O	CALM ⑤	24	O	CINP ④
12	O	MBR-A ①	25	O	MBR-B ②
13	O	MBR-C ③	26	—	DOCOM

Tab. 4-10: *Signal arrangement of CN3 in MR-J4W-B*

① Initial device for A-axis, assignment with parameter PD07

② Initial device for B-axis, assignment with parameter PD07

③ Initial device for C-axis, assignment with parameter PD07
The pin is not used for MR-J4 2-axis servo amplifiers.

④ Initial device for A, B and C-axis, assignment with parameter PD08

⑤ Initial device for A, B and C-axis, assignment with parameter PD09

Meaning of symbols

The most important signals are explained in the table below. You will find detailed information about all signals in the instruction manual of the respective servo amplifier.

Signal		Symbol ①	Name	Description
Control terminals	Signal inputs	DI1-A	—	Devices can be assigned for these signals with controller setting. For devices that can be assigned, refer to the controller instruction manual. The following devices can be assigned for MR-J4 compatible controller (Q172DSCPU, Q173DSCPU, and QD77MS□). DI1-A: FLS for A-axis (Upper stroke limit) DI2-A: RLS for A-axis (Lower stroke limit) DI3-A: DOG for A-axis (Proximity dog) DI1-B: FLS for B-axis (Upper stroke limit) DI2-B: RLS for B-axis (Lower stroke limit) DI3-B: DOG for B-axis (Proximity dog) DI1-C: FLS for C-axis (Upper stroke limit) DI2-C: RLS for C-axis (Lower stroke limit) DI3-C: DOG for C-axis (Proximity dog)
		DI1-B		
		DI1-C		
		DI2-A		
		DI2-B		
		DI2-C		
		DI3-A		
		DI3-B		
		DI3-C		
		EM2	Forced stop 2	Turn off EM2 (open between commons) to decelerate the servo motor to a stop with commands. Turn EM2 on (short between commons) in the forced stop state to reset that state.
	Signal outputs	ALM-A	Alarm	When the protective circuit is activated to shut off the base circuit, ALM will turn off. When an alarm does not occur, ALM will turn on about 3 s after power-on.
		ALM-B		
		ALM-C		
		RD-A	Ready	Enabling servo-on to make the servo amplifier ready to operate will turn on RD.
		RD-B		
		RD-C		
		INP-A	In position	When the number of droop pulses is in the preset in-position range, INP will turn on. The device cannot be used in the speed control mode, torque control mode, and for continuous operation to torque control mode.
		INP-B		
		INP-C		
		WNG-A	Warning	When warning has occurred, WNG turns on. When a warning is not occurring, turning on the power will turn off WNG after about 3 s.
		WNG-B		
		WNG-C		
Power supply	Common	DICOM	Input 24 V DC (± 10%, MR-J4W2-□B: 350 mA, MR-J4W3-□B: 450 mA) to I/O interface	For sink interface, connect + of 24 V DC external power supply.
				For source interface, connect – of 24 V DC external power supply.
		DOCOM	Common terminal of input signal such as EM2 of the servo amplifier. This is separated from LG.	For sink interface, connect – of 24 V DC external power supply.
				For source interface, connect + of 24 V DC external power supply.
		LG	Control common	This is for encoder output pulses (differential line driver).
	SD		Shielding, housing	

Tab. 4-11: *Selection of the most important input and output signals of CN3*

① The last letter with hyphen in device symbols means the target axis.
(□□□ differs depending on devices)

□□□-A: Device for A-axis
□□□-B: Device for B-axis
□□□-C: Device for C-axis
This device is not used for MR-J4 2-axis servo amplifiers.

4.2.4 Servo amplifier series MR-J4-GF

The shown front view is that of servo amplifier MR-J4-60GF-RJ or less. The terminal configuration is the same for all models of the MR-J4-GF series.

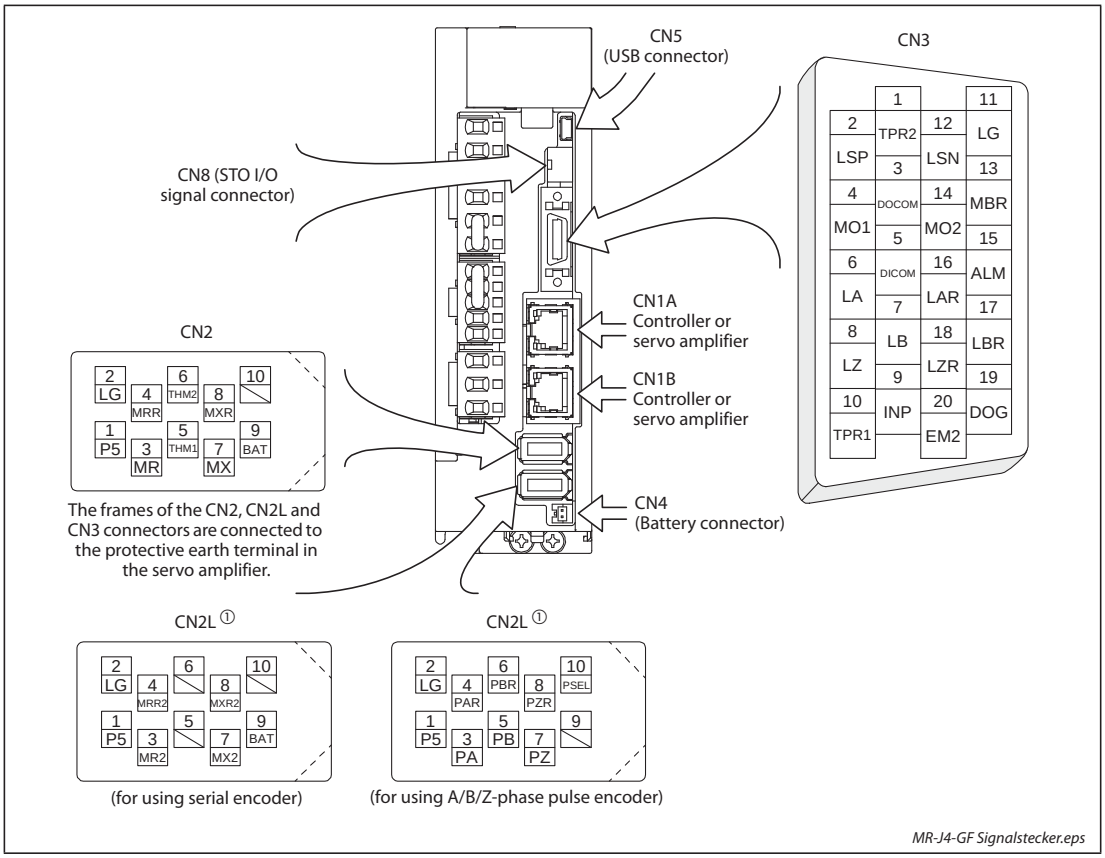

Fig. 4-6: *MR-J4-GF signal arrangement*

① The MR-J4-□GF(4)-RJ servo amplifiers have CN2L connectors.

Signal assignment

Connector	Name	Description
CN1A	CC-Link IE Field Network	The CN1A and CN1B connectors are dedicated for CC-Link IE Field Network.
CN1B		
CN2	Encoder connector	Connector for the servo motor encoder
CN2L ①		Connector for external encoder (Serial encoder or A/B/Z-phase pulse encoder)
CN3	I/O devices	Control interface (see tab. 4-13)
CN4	Battery terminal	For connecting the battery (MR-BAT6V1SET-A) to store the data of the absolute position detection (observe the following note). When you want to connect the battery, disconnect the power supply of the main circuit and wait for more than 15 minutes, after the charge lamp has gone off. When replacing the battery, leave the power supply of the control circuit on and disconnect only the supply voltage of the main circuit. Otherwise, the absolute position data will be lost.
CN5	Communication (USB)	Connector for a personal computer (PC)
CN8	STO connector	Connector for safety function (Safe Torque Off)

Tab. 4-12: *Description of CN1A, CN1B, CN2, CN2L, CN3, CN4, CN5 and CN8*

① The MR-J4-□GF(4)-RJ servo amplifiers have CN2L connectors.

NOTE

The MR-BAT6V1BJ battery for junction battery cable is only for the HG series servo motors. It cannot be used with direct drive motors. Do not use the MR-BAT6V1BJ battery for junction battery cable in the fully closed loop system and scale measurement function.

Signal arrangement of CN3

Pin No.	Signal I/O	Symbol of I/O signal	Assignment with parameter ①	Pin No.	Signal I/O	Symbol of I/O signal	Assignment with parameter ①
1	I	TPR2	—	11	—	LG	—
2	I	LSP ②	PD03	12	I	LSN ②	PD04
3	—	DOCOM	—	13	O	MBR ②	PD07
4	O	MO1	—	14	O	MO2	—
5	—	DICOM	—	15	O	ALM ②	PD09
6	—	LA	—	16	—	LAR	—
7	—	LB	—	17	—	LBR	—
8	—	LZ	—	18	—	LZR	—
9	O	INP ②	PD08	19	I	DOG ②	PD05
10	I	TPR1	—	20	I	EM2 ②	PA04

Tab. 4-13: *Signal arrangement of CN3 in MR-J4-GF*

① Assignable symbols:

PC	LSP	LSN	CDP	CLD	DOG	RD
ALM	INP	MBR	DB	TLC	WNG	BWNG
SA	VLC	ZSP	CDPS	CLDS	ABSV	MTTR
EM1	EM2					

② Symbol of initial setting

Meaning of symbols

The most important signals are explained in the table below. You will find detailed information about all signals in the instruction manual of the respective servo amplifier.

Signal		Symbol	Name	Description	
Control terminals	Signal inputs	EM2	Forced stop 2	Turn off EM2 (open between commons) to decelerate the servo motor to a stop with commands. Turn EM2 on (short between commons) in the forced stop state to reset that state.	
		LSP	Forward rotation stroke end	To start the operation, turn on LSP and LSN. Turn it off to bring the servo motor to a slow stop and make it servo-locked. When LSP or LSN is turned off, AL. 99 (Stroke limit warning) occurs. It can be used during the magnetic pole detection in the linear servo motor control mode and the DD motor control mode. Also, when the magnetic pole detection in the torque mode is completed, this signal will be disabled.	
		LSN	Reverse rotation stroke end		
		DOG	Proximity dog	Turning off DOG will detect a proximity dog. The polarity for dog detection can be changed with Parameter PT29.	
	Signal outputs	ALM	Alarm	When the protective circuit is activated to shut off the base circuit, ALM will turn off. When an alarm does not occur, ALM will turn on after 2.5 s to 3.5 s after power-on.	The signal must first be assigned to a certain output terminal of plug CN3 via parameter setting PD07–PD09.
		RD	Ready	RD turns on when the servo is switched on and the servo amplifier is ready to operate.	
		INP	In position	INP turns on when the number of droop pulses is in the preset in-position range. The device cannot be used in the velocity mode and torque mode.	
		WNG	Warning	When warning has occurred, WNG turns on. When a warning is not occurring, turning on the power will turn off WNG after 2.5 s to 3.5 s.	
Analog terminals	Analog output	MO1	Analog monitor 1	Used to output the data set in parameter PC09 to across MO1–LG in terms of voltage.	Resolution: 10 bits or equivalent
		MO2	Analog monitor 2	Used to output the data set in parameter PC10 to across MO2–LG in terms of voltage.	
Power supply	Common	DICOM	Input 24 V DC (± 10%, 300 mA) to I/O interface	For sink interface, connect + of 24 V DC external power supply.	
				For source interface, connect – of 24 V DC external power supply.	
		DOCOM	Common terminal of input signal such as EM2 of the servo amplifier. This is separated from LG.	For sink interface, connect – of 24 V DC external power supply.	
				For source interface, connect + of 24 V DC external power supply.	
		LG	Common terminal of MO1 and MO2		
	SD		Shielding, housing		

Tab. 4-14: *Selection of the most important input and output signals of CN3*

4.2.5 Servo amplifier series MR-J4-TM

The shown front view is that of servo amplifier MR-J4-60TM or less. The terminal configuration is the same for all models of the MR-J4-TM series.

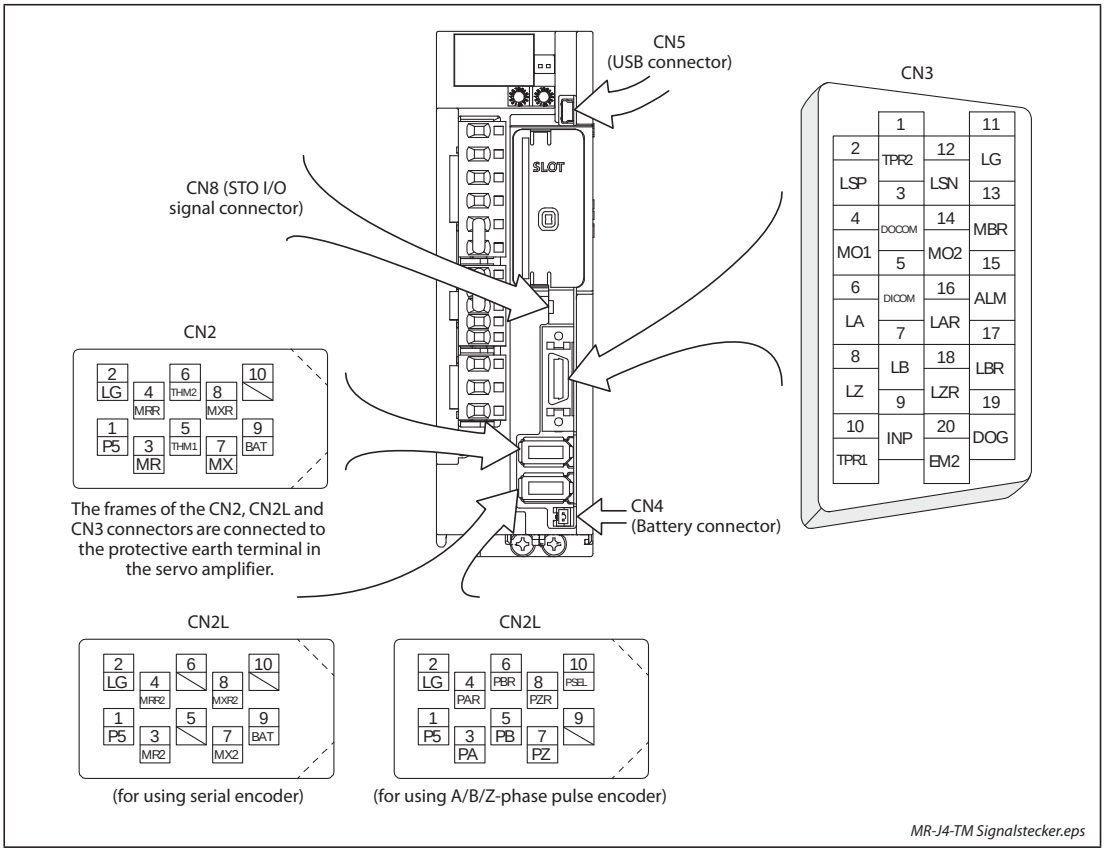

Fig. 4-7: *MR-J4-TM signal arrangement*

Signal assignment

Connector	Name	Description
CN2	Encoder connector	Connector for the servo motor encoder
CN2L		Connector for external encoder (Serial encoder or A/B/Z-phase pulse encoder)
CN3	I/O devices	Control interface (see tab. 4-16)
CN4	Battery terminal	For connecting the battery (MR-BAT6V1SET-A) to store the data of the absolute position detection (observe the following note). When you want to connect the battery, disconnect the power supply of the main circuit and wait for more than 15 minutes, after the charge lamp has gone off. When replacing the battery, leave the power supply of the control circuit on and disconnect only the supply voltage of the main circuit. Otherwise, the absolute position data will be lost.
CN5	Communication (USB)	Connector for a personal computer (PC)
CN8	STO connector	Connector for safety function (Safe Torque Off)

Tab. 4-15: *Description of CN2, CN2L, CN3, CN4, CN5 and CN8*

NOTE

The MR-BAT6V1BJ battery for junction battery cable is only for the HG series servo motors. It cannot be used with direct drive motors. Do not use the MR-BAT6V1BJ battery for junction battery cable in the fully closed loop system and scale measurement function.

Signal arrangement of CN3

Pin No.	Signal I/O	Symbol of I/O signal	Assignment with parameter ①	Pin No.	Signal I/O	Symbol of I/O signal	Assignment with parameter ①
1	I	TPR2	—	11	—	LG	—
2	I	LSP ②	PD03	12	I	LSN ②	PD04
3	—	DOCOM	—	13	O	MBR ②	PD07
4	O	MO1	—	14	O	MO2	—
5	—	DICOM	—	15	O	ALM ②	PD09
6	—	LA	—	16	—	LAR	—
7	—	LB	—	17	—	LBR	—
8	—	LZ	—	18	—	LZR	—
9	O	INP ②	PD08	19	I	DOG ②	PD05
10	I	TPR1 ②	PD38	20	I	EM2 ②	PA04

Tab. 4-16: *Signal arrangement of CN3 in MR-J4-TM*

① Assignable symbols:

PC	LSP	LSN	CDP	CLD	DOG	RD
ALM	INP	MBR	DB	TLC	WNG	BWNG
SA	VLC	ZSP	CDPS	CLDS	ABSV	MTTR
EM1	EM2	TPR1	ST			

② Symbol of initial setting

Meaning of symbols

The most important signals are explained in the table below. You will find detailed information about all signals in the instruction manual of the respective servo amplifier.

Signal		Symbol	Name	Description	
Control terminals	Signal inputs	EM2	Forced stop 2	Turn off EM2 (open between commons) to decelerate the servo motor to a stop with commands. Turn EM2 on (short between commons) in the forced stop state to reset that state.	
		TPR1	Touch probe 1	The touch probe function is available to latch the current position by sensor input. Turn it on to latch the current position.	
		TPR2	Touch probe 2		
		LSP	Forward rotation stroke end	To start the operation, turn on LSP and LSN. Turn it off to bring the servo motor to a slow stop and make it servo-locked. When LSP or LSN is turned off, AL. 99 (Stroke limit warning) occurs. It can be used during the magnetic pole detection in the linear servo motor control mode and the DD motor control mode. Also, when the magnetic pole detection in the torque mode is completed, this signal will be disabled.	
		LSN	Reverse rotation stroke end		
		DOG	Proximity dog	Turning off DOG will detect a proximity dog. The polarity for dog detection can be changed with parameter PT29.	
	Signal outputs	ALM	Alarm	When the protective circuit is activated to shut off the base circuit, ALM will turn off. When an alarm does not occur, ALM will turn on after 2.5 s to 3.5 s after power-on.	The signal must first be assigned to a certain output terminal of plug CN3 via parameter setting PD07–PD09.
		RD	Ready	RD turns on when the servo is switched on and the servo amplifier is ready to operate.	
		INP	In position	INP turns on when the number of droop pulses is in the preset in-position range. The device cannot be used in the velocity mode and torque mode.	
		WNG	Warning	When warning has occurred, WNG turns on. When a warning is not occurring, turning on the power will turn off WNG after 2.5 s to 3.5 s.	
Analog terminals	Analog output	MO1	Analog monitor 1	Used to output the data set in parameter PC09 to across MO1–LG in terms of voltage.	Resolution: 10 bits or equivalent
		MO2	Analog monitor 2	Used to output the data set in parameter PC10 to across MO2–LG in terms of voltage.	
Power supply	Common	DICOM	Input 24 V DC (± 10%, 300 mA) to I/O interface	For sink interface, connect + of 24 V DC external power supply.	
				For source interface, connect – of 24 V DC external power supply.	
		DOCOM	Common terminal of input signal such as EM2 of the servo amplifier. This is separated from LG.	For sink interface, connect – of 24 V DC external power supply.	
				For source interface, connect + of 24 V DC external power supply.	
		LG	Common terminal of MO1 and MO2		
	SD		Shielding, housing		

Tab. 4-17: *Selection of the most important input and output signals of CN3*

4.3 Wiring the interfaces

4.3.1 I/O interfaces in negative logic (sink type)

Digital input interface DI-1

This is an input circuit whose photocoupler cathode side is the input terminal. Transmit signals from sink (open-collector) type transistor output, relay switch, etc.

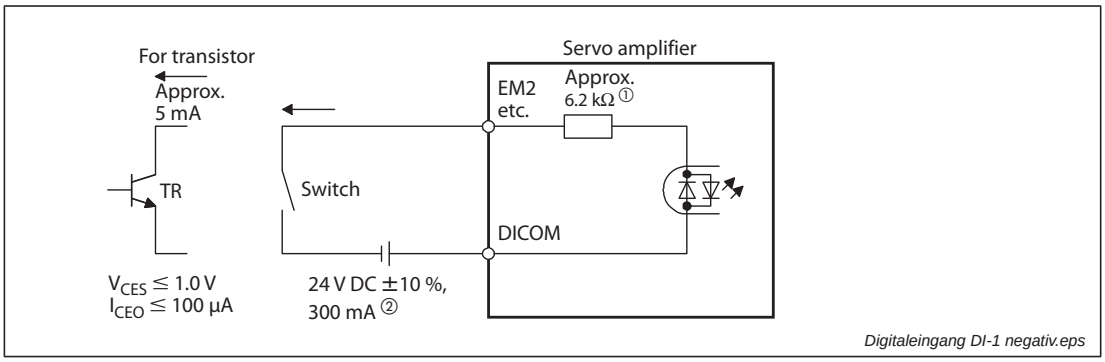

Fig. 4-8: *Example*

① MR-J4W□-□B: Approximately 5.6 kΩ
MR-J4-□GF/TM: Approximately 4.3 kΩ for CN3-1 and CN3-10 pins.

② MR-J4-□A: 500 mA, MR-J4W2-□B: 350 mA, MR-J4W3-□B: 450 mA

Digital output interface DO-1

This is a circuit of collector output terminal of the output transistor. When the output transistor is turned on, collector terminal current will be applied for the output.
A lamp, relay or photocoupler can be driven. Install a diode (D) for an inductive load, or install an inrush current suppressing resistor (R) for a lamp load.

(Rated current: 40 mA or less, maximum current: 50 mA or less, inrush current: 100 mA or less)
A maximum of 2.6 V voltage drop occurs in the servo amplifier.

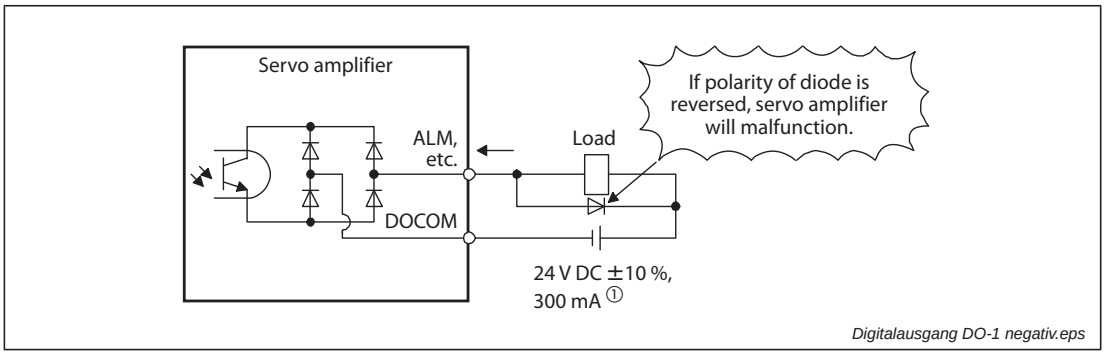

Fig. 4-9: *Example*

① MR-J4-□A: 500 mA, MR-J4W2-□B: 350 mA, MR-J4W3-□B: 450 mA
If the voltage drop (maximum of 2.6 V) interferes with the relay operation, apply high voltage (maximum of 26.4 V) from external source.

WARNING:

When connecting an inductive load, please observe the right polarity of the recovery diode. Wrong polarity of the diode can damage the servo amplifier.

4.3.2 I/O interfaces in positive logic (source type)

In this servo amplifier, source type I/O interfaces can be used.

Digital input interface DI-1

This is an input circuit whose photocoupler anode side is the input terminal. Transmit signals using source (open-collector) type transistor output, relay switch, etc.

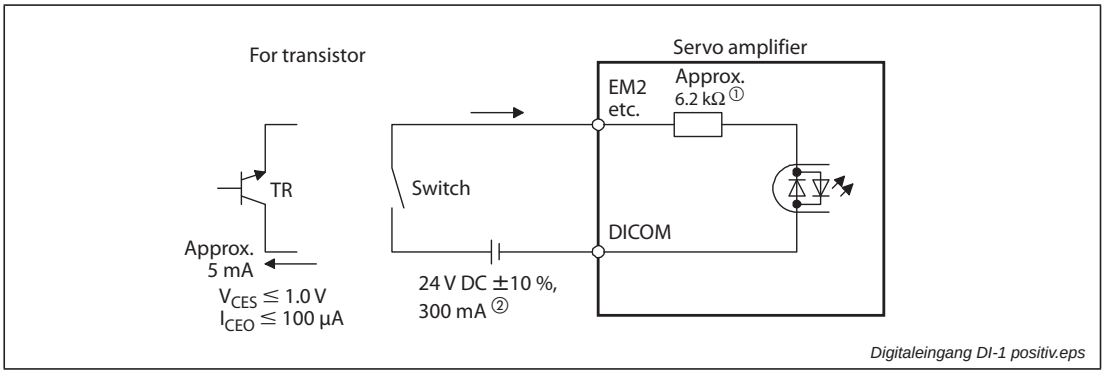

Fig. 4-10: *Example*

① MR-J4W□-□B: Approximately 5.6 kΩ
MR-J4-□GF/TM: Approximately 4.3 kΩ for CN3-1 and CN3-10 pins.

② MR-J4-□A(-RJ): 500 mA, MR-J4W2-□B: 350 mA, MR-J4W3-□B: 450 mA

Digital output interface DO-1

This is a circuit in which the emitter side of the output transistor is the output terminal. When the output transistor is turned on, the current flows from the output terminal to a load.
A maximum of 2.6 V voltage drop occurs in the servo amplifier.

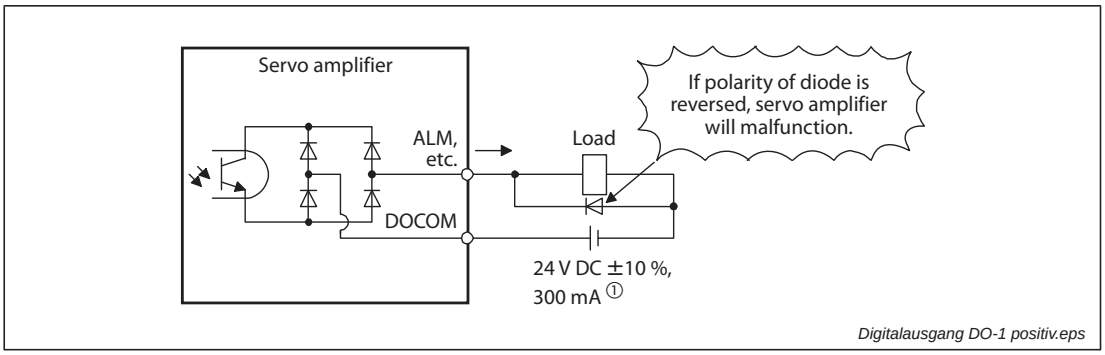

Fig. 4-11: *Example*

① MR-J4-□A(-RJ): 500 mA, MR-J4W2-□B: 350 mA, MR-J4W3-□B: 450 mA
If the voltage drop (maximum of 2.6 V) interferes with the relay operation, apply high voltage (maximum of 26.4 V) from external source.

WARNING:

When connecting an inductive load, please observe the right polarity of the recovery diode. Wrong polarity of the diode can damage the servo amplifier.

4.3.3 Analog interfaces

Analog input (only MR-J4-A(-RJ))

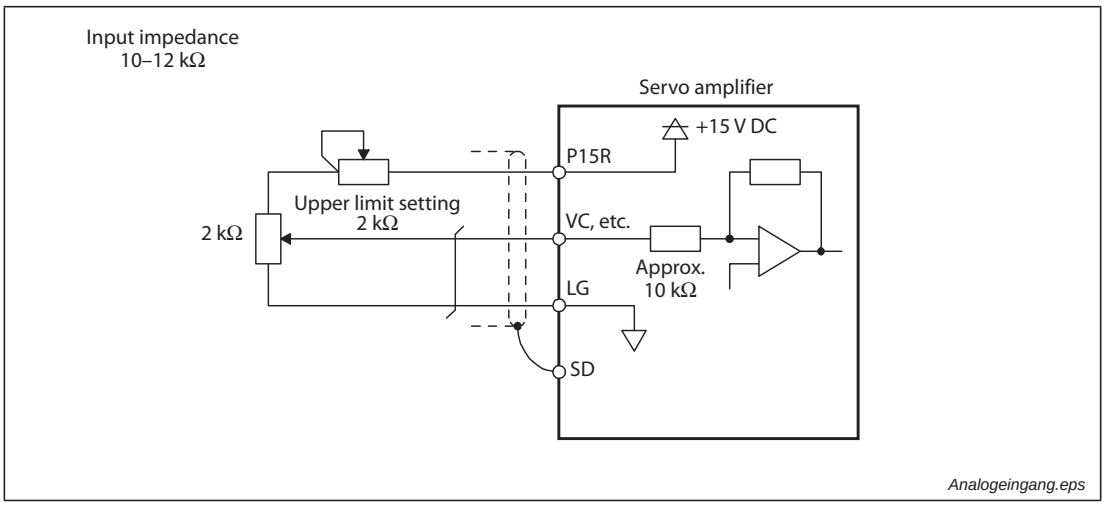

Fig. 4-12: *Example*

Analog output (only MR-J4-A(-RJ), MR-J4-B(-RJ), MR-J4-GF(-RJ) and MR-J4-TM)

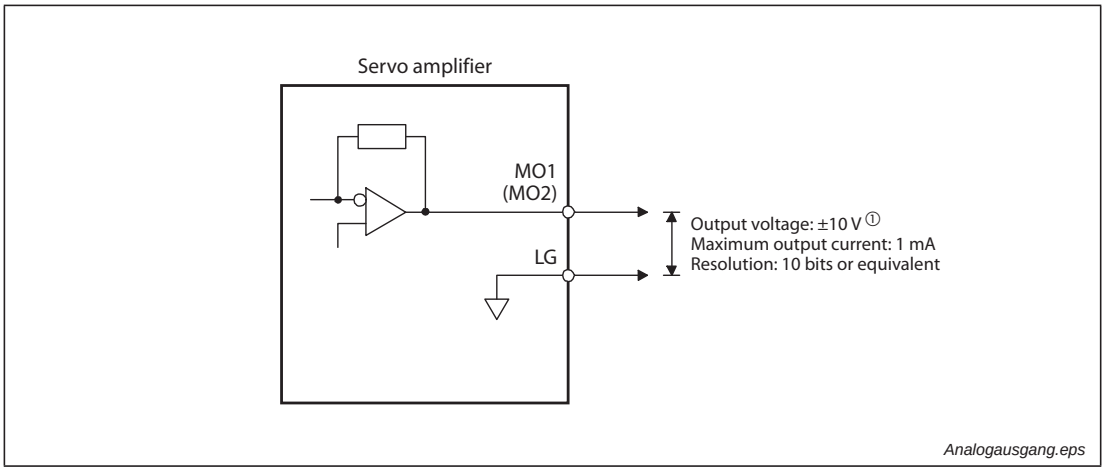

Fig. 4-13: *Example*

① Output voltage range varies depending on the monitored signal.

4.4 Communication function

NOTE The USB communication function (CN5 connector) and the RS-422 communication function (CN3 connector) are mutually exclusive functions. They cannot be used together.

4.4.1 Serial interface RS-422 (only MR-J4-A(-RJ))

You can operate servo driving, parameter change, monitor function, etc. using RS-422 serial communication function with the servo amplifier.

- Single axis

  Operate the single-axis servo amplifier. It is recommended to use the following cable.

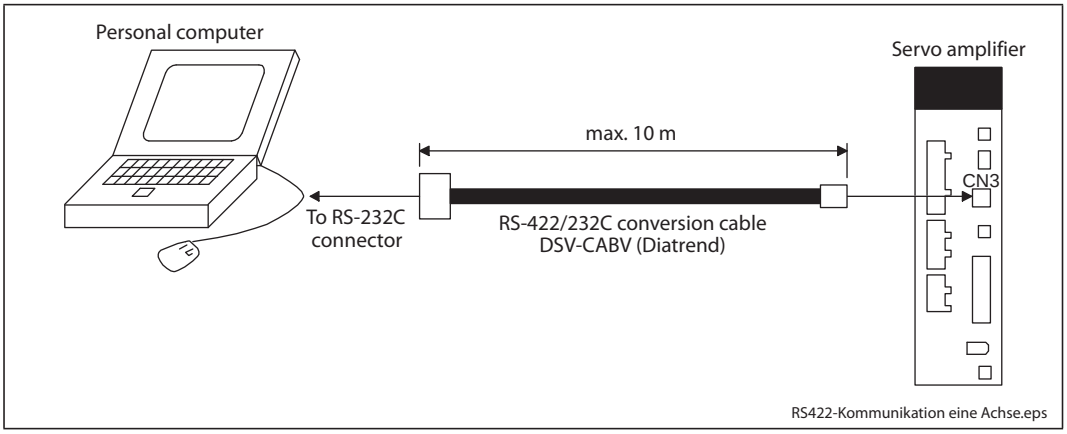

Fig. 4-14: *System configuration with the RS-422 interface for operation with one axis*

- Multi-drop connection

  Up to 32 axes of servo amplifiers from stations 0 to 31 can be operated on the same bus.

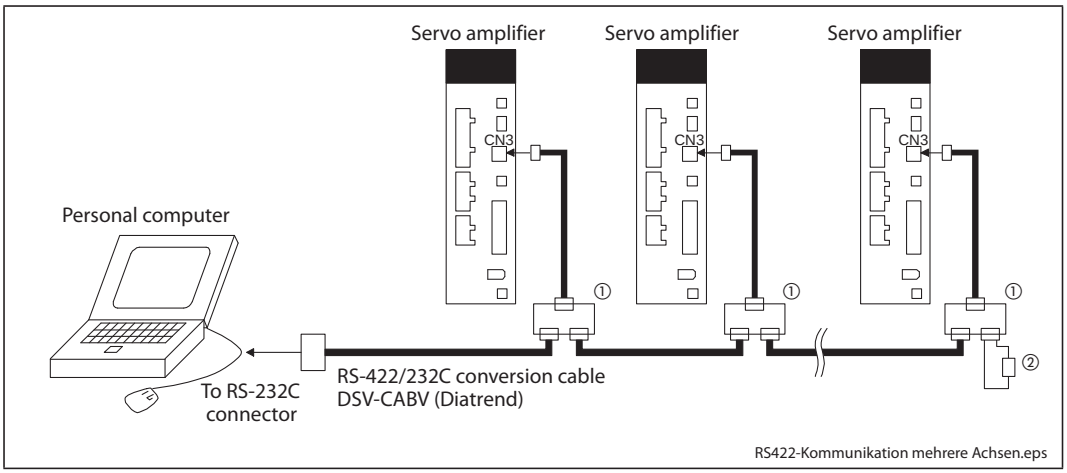

Fig. 4-15: *System configuration with the RS-422 interface for operation with multiple axes*

① The BMJ-8 (Hachiko Electric) is recommended as the branch connector.

② The final axis must be terminated between RDP (pin No. 3) and RDN (pin No. 6) on the receiving side (servo amplifier) with a 150 Ω resistor.

4.4.2 USB interface

The servo amplifiers of the MR-J4 series have an USB communication interface. Therefore, you can connect the servo amplifier to the personal computer with MR Configurator2 installed to perform the parameter setting, test operation, gain adjustment, and others.

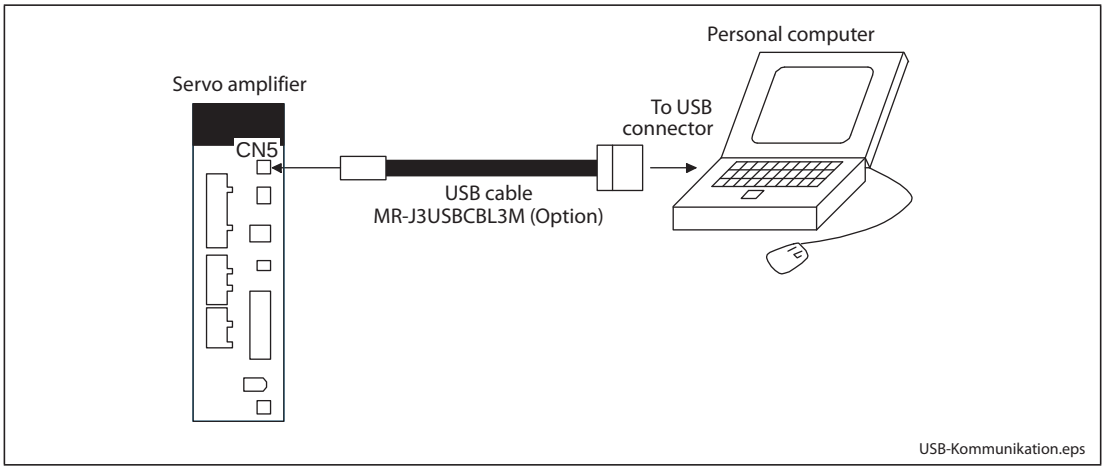

Fig. 4-16: *Connection for USB communication*

Note that using the USB communication function (CN5 connector) prevents the RS-422 communication function (CN3 connector) from being used, and vice versa. They cannot be used together.

4.5 Optical interface SSCNET III (only MR-J4-B(-RJ) and MR-J4W-B)

The servo amplifiers MR-J4-B(-RJ) and MR-J4W-B have an optical interface SSCNET III (CN1A, CN1B). Operation and monitoring of the servo amplifier can be done by the motion CPU.

WARNING:

Do not see directly the light generated from CN1A and CN1B connector of servo amplifier or the end of SSCNET III cable. When the light gets into eye, may feel something is wrong for eye. (The light source of SSCNET III complies with class1 defined in JIS C6802 or IEC60825-1.)

The SSCNET III cable of the HOST controller (motion CPU) or of the preceding servo amplifier is plugged into connector CN1A. The SSCNET III cable to the next servo amplifier is plugged into terminal CN1B. For CN1B connector of the final axis, put the cap on, which came with the servo amplifier.

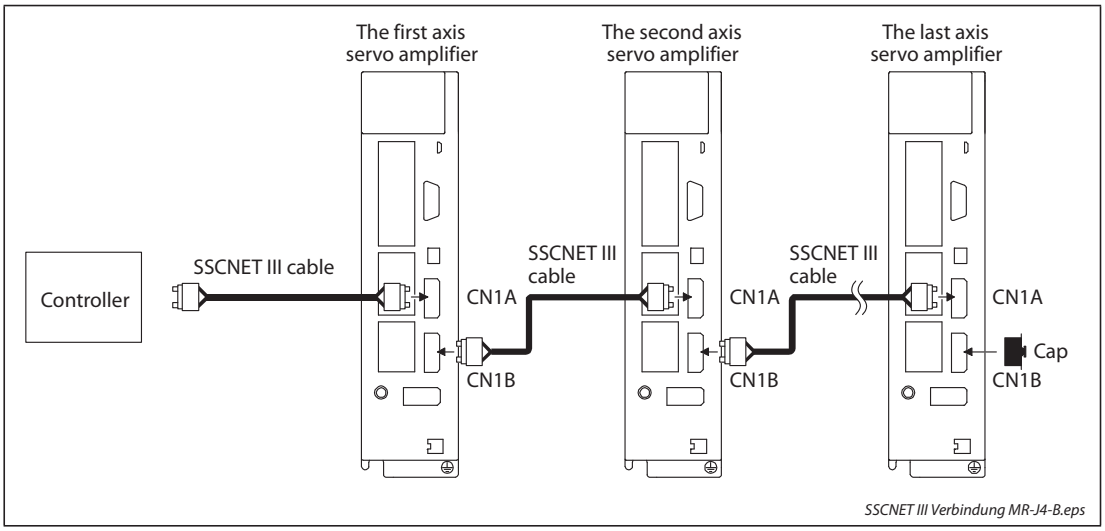

Fig. 4-17: *SSCNET III cable connection for MR-J4-B(-RJ)*

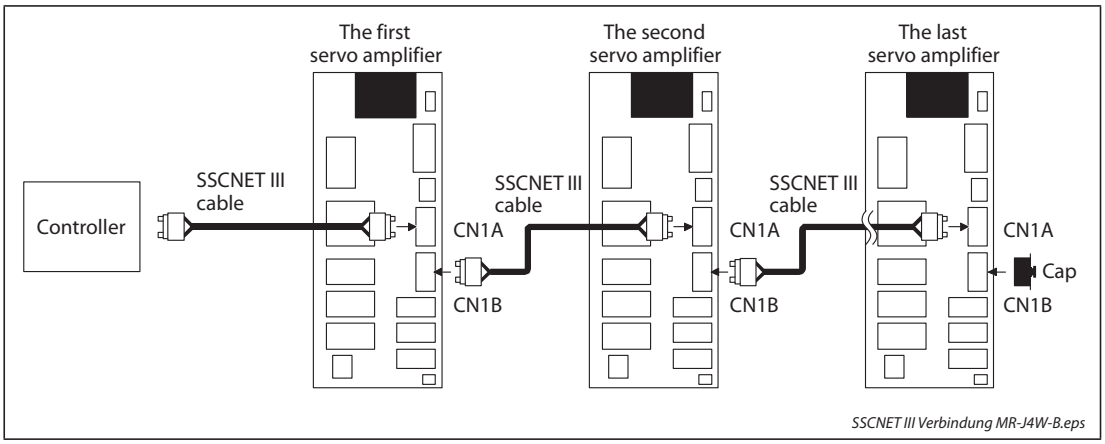

Fig. 4-18: *SSCNET III cable connection for MR-J4W-B*

NOTES

Put a cap on CN1A and CN1B connector to protect the light device inside the connector from dust. For this reason, do not remove a cap until just before mounting the SSCNET III cable. Then, when removing SSCNET III cable, make sure to put a cap on.

Keep the cap for CN1A and CN1B connector and the tube for protecting the end of SSCNET III cable in a plastic bag with a zipper to prevent them from becoming dirty.

When asking repair of servo amplifier for some troubles, make sure to put a cap on CN1A and CN1B connector. When the connector is not protected by a cap, the light device may be damaged at the transit. In this case, exchange and repair of light device is required.

SSCNET III cable with open ends (e.g. after disassembly of a defective servo amplifier) should be covered immediately with the protective tube to prevent damage.

4.6 CC-Link IE-Field interface (only MR-J4-GF(-RJ))

CC-Link IE Field status display LED

The following shows the CC-Link IE Field status display LED.

Connectors CN1A/CN1B	LED	Name	Lighting status	Description
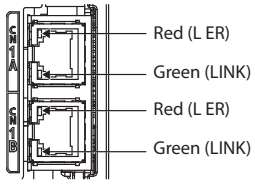	L ER (CN1A/CN1B)	Line error status	Lit	Erroneous data is being received
	LINK (CN1A/CN1B)	Link status	Lit	Linking up

Tab. 4-18: *LED indication list*

WARNING:

The CN1A and CN1B connectors are designed for CC-Link IE Field Network only. Do not connect these connectors to other than CC-Link IE Field Network. Doing so may cause a malfunction.

4.7 Setting the control axis number (only MR-J4-B(-RJ) and MR-J4W-B)

You can set the control axis number between 1 and 64 by using auxiliary axis number setting switches with the axis selection rotary switch. If the same numbers are set to different control axes in a single communication system, the system will not operate properly. The control axes may be set independently of the SSCNET III cable connection sequence. The following shows the description of each switch.

4.7.1 MR-J4-B(-RJ)

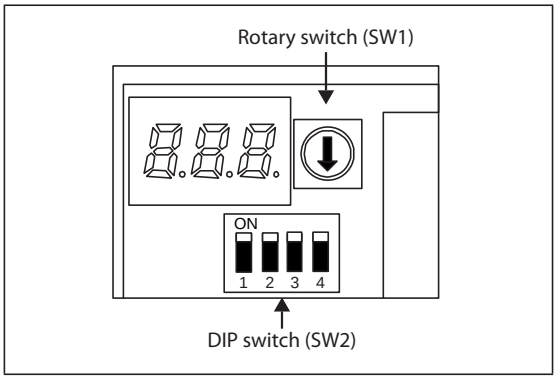

Fig. 4-19:
Switches for setting the control axis number (MR-J4-B(-RJ))

MR-J4-B_Front_controls.eps

Auxiliary axis number setting switches (SW2-3 and SW2-4)

Turning these switches "ON (up)" enables you to set the axis No. 17 or more.

Axis selection rotary switch (SW1)

You can set the control axis number between 1 and 64 by using auxiliary axis number setting switches with the axis selection rotary switch.

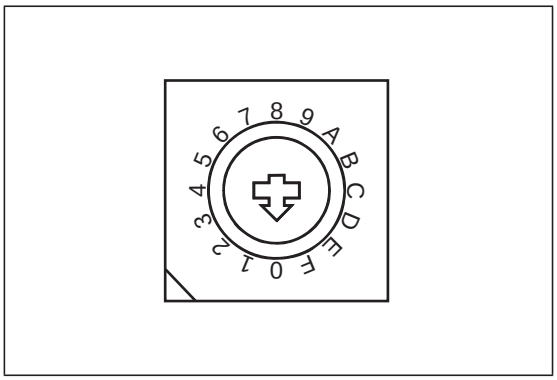

Fig. 4-20:
Rotary switch (SW1)

Rotary switch SW1.eps

WARNING:

- ***When switching the axis selection rotary switch (SW1) and auxiliary axis number setting switch (SW2), use insulated screw driver. Do not use a metal screw driver. Touching patterns on electronic boards, lead of electronic parts, etc. may cause an electric shock.***
- ***For setting the axis selection rotary switch, use a flat-blade screwdriver with the blade edge width of 2.1 mm to 2.3 mm and the blade edge thickness of 0.6 mm to 0.7 mm.***

Switch combination list for the control axis No. setting

The following lists show the setting combinations of the auxiliary axis number setting switches and the axis selection rotary switch.

Auxiliary axis number setting switch	Axis selection rotary switch	Control axis number
ON 1 2 3 4	0	1
	1	2
	2	3
	3	4
	4	5
	5	6
	6	7
	7	8
	8	9
	9	10
	A	11
	B	12
	C	13
	D	14
	E	15
	F	16

Auxiliary axis number setting switch	Axis selection rotary switch	Control axis number
ON 1 2 3 4	0	17
	1	18
	2	19
	3	20
	4	21
	5	22
	6	23
	7	24
	8	25
	9	26
	A	27
	B	28
	C	29
	D	30
	E	31
	F	32

Auxiliary axis number setting switch	Axis selection rotary switch	Control axis number
ON 1 2 3 4	0	33
	1	34
	2	35
	3	36
	4	37
	5	38
	6	39
	7	40
	8	41
	9	42
	A	43
	B	44
	C	45
	D	46
	E	47
	F	48

Auxiliary axis number setting switch	Axis selection rotary switch	Control axis number
ON 1 2 3 4	0	49
	1	50
	2	51
	3	52
	4	53
	5	54
	6	55
	7	56
	8	57
	9	58
	A	59
	B	60
	C	61
	D	62
	E	63
	F	64

Tab. 4-19: *Switch combinations for setting the control axis numbers from 1 to 64 (MR-J4-B)*

4.7.2 MR-J4W-B

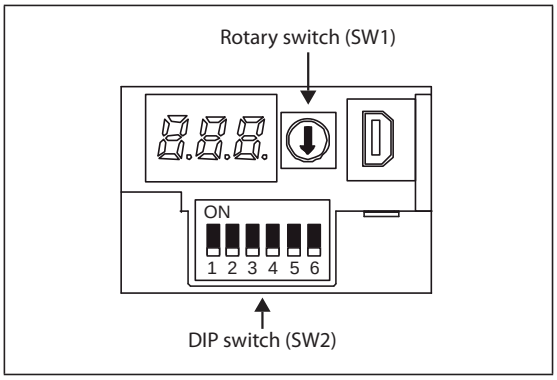

Fig. 4-21:
Switches for setting the control axis number (MR-J4W-B)

MR-J4W-B_Front_controls.eps

Auxiliary axis number setting switches (SW2-5 and SW2-6)

Turning these switches "ON (up)" enables you to set the axis No. 17 or more.

Axis selection rotary switch (SW1)

You can set the control axis number between 1 and 64 by using auxiliary axis number setting switches with the axis selection rotary switch.

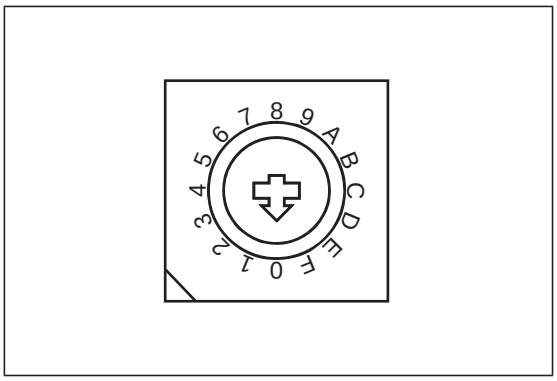

Fig. 4-22:
Rotary switch (SW1)

Rotary switch SW1.eps

WARNING:

- ***When switching the axis selection rotary switch (SW1) and auxiliary axis number setting switch (SW2), use insulated screw driver. Do not use a metal screw driver. Touching patterns on electronic boards, lead of electronic parts, etc. may cause an electric shock.***
- ***For setting the axis selection rotary switch, use a flat-blade screwdriver with the blade edge width of 2.1 mm to 2.3 mm and the blade edge thickness of 0.6 mm to 0.7 mm.***

Switch combination list for the control axis No. setting

The following lists show the setting combinations of the auxiliary axis number setting switches and the axis selection rotary switch.

- MR-J4 2-axis servo amplifier
  The control axis number of A-axis is set as 1 to 63 and B-axis is set as 2 to 64.

Auxiliary axis number setting switch	Axis selection rotary switch	Control axis number	
		A-axes	B-axes
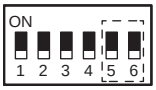	0	1	2
	1	2	3
	2	3	4
	3	4	5
	4	5	6
	5	6	7
	6	7	8
	7	8	9
	8	9	10
	9	10	11
	A	11	12
	B	12	13
	C	13	14
	D	14	15
	E	15	16
	F	16	17

Auxiliary axis number setting switch	Axis selection rotary switch	Control axis number	
		A-axes	B-axes
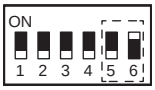	0	17	18
	1	18	19
	2	19	20
	3	20	21
	4	21	22
	5	22	23
	6	23	24
	7	24	25
	8	25	26
	9	26	27
	A	27	28
	B	28	29
	C	29	30
	D	30	31
	E	31	32
	F	32	33

Auxiliary axis number setting switch	Axis selection rotary switch	Control axis number	
		A-axes	B-axes
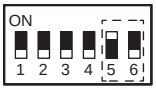	0	33	34
	1	34	35
	2	35	36
	3	36	37
	4	37	38
	5	38	39
	6	39	40
	7	40	41
	8	41	42
	9	42	43
	A	43	44
	B	44	45
	C	45	46
	D	46	47
	E	47	48
	F	48	49

Auxiliary axis number setting switch	Axis selection rotary switch	Control axis number	
		A-axes	B-axes
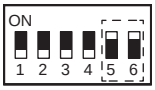	0	49	50
	1	50	51
	2	51	52
	3	52	53
	4	53	54
	5	54	55
	6	55	56
	7	56	57
	8	57	58
	9	58	59
	A	59	60
	B	60	61
	C	61	62
	D	62	63
	E	63	64
	F	①	

Tab. 4-20: *Switch combinations for setting the control axis numbers for axes A and B (MR-J4W2-B)*

① When B-axis is set as disabled-axis, A-axis is used as 64 axes. When B-axis is not set as disabled-axis, AL. 11 "Switch setting error" occurs.

● MR-J4 3-axis servo amplifier
The control axis number of A-axis is set as 1 to 62, B-axis is set as 2 to 63, and C-axis is set as 3 to 64.

Auxiliary axis number setting switch	Axis selection rotary switch	Control axis number		
		A-axes	B-axes	C-axes
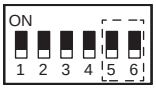	0	1	2	3
	1	2	3	4
	2	3	4	5
	3	4	5	6
	4	5	6	7
	5	6	7	8
	6	7	8	9
	7	8	9	10
	8	9	10	11
	9	10	11	12
	A	11	12	13
	B	12	13	14
	C	13	14	15
	D	14	15	16
	E	15	16	17
	F	16	17	18

Auxiliary axis number setting switch	Axis selection rotary switch	Control axis number		
		A-axes	B-axes	C-axes
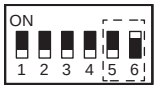	0	17	18	19
	1	18	19	20
	2	19	20	21
	3	20	21	22
	4	21	22	23
	5	22	23	24
	6	23	24	25
	7	24	25	26
	8	25	26	27
	9	26	27	28
	A	27	28	29
	B	28	29	30
	C	29	30	31
	D	30	31	32
	E	31	32	33
	F	32	33	34

Auxiliary axis number setting switch	Axis selection rotary switch	Control axis number		
		A-axes	B-axes	C-axes
	0	33	34	35
	1	34	35	36
	2	35	36	37
	3	36	37	38
	4	37	38	39
	5	38	39	40
	6	39	40	41
	7	40	41	42
	8	41	42	43
	9	42	43	44
	A	43	44	45
	B	44	45	46
	C	45	46	47
	D	46	47	48
	E	47	48	49
	F	48	49	50

Auxiliary axis number setting switch	Axis selection rotary switch	Control axis number		
		A-axes	B-axes	C-axes
	0	49	50	51
	1	50	51	52
	2	51	52	53
	3	52	53	54
	4	53	54	55
	5	54	55	56
	6	55	56	57
	7	56	57	58
	8	57	58	59
	9	58	59	60
	A	59	60	61
	B	60	61	62
	C	61	62	63
	D	62	63	64
	E	①		
	F	②		

Tab. 4-21: *Switch combinations for setting the control axis numbers for axes A, B and C (MR-J4W3-B)*

① When C-axis is set as disabled-axis, A-axis is used as 63 axes and B-axis is used as 64 axes. When C-axis is not set as disabled-axis, AL. 11 "Switch setting error" occurs.

② When B-axis and C-axis are set as disabled-axes, A-axis is used as 64 axes. When B-axis and C-axis are not set as disabled-axes, AL. 11 "Switch setting error" occurs.

4.8 Disabling of control axes (only MR-J4W-B)

Turning "ON (up)" a disabling control axis switch disables the corresponding servo motor. The servo motor will be disabled-axis status and will not be recognized by the controller. The following shows the disabling control axis switches for each axis.

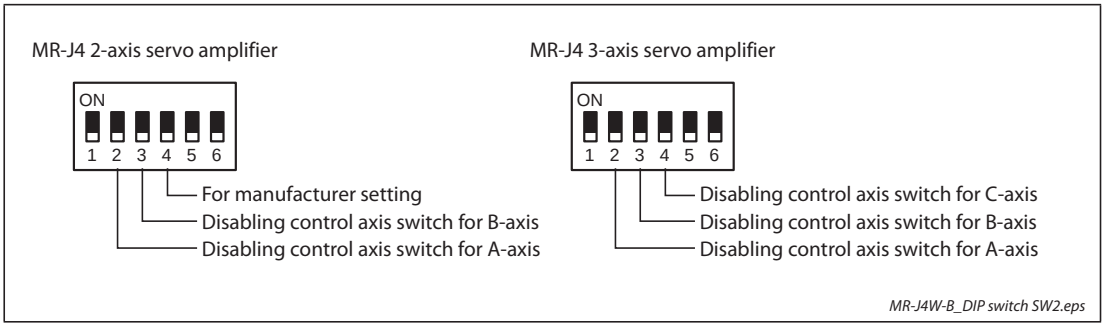

Fig. 4-23: *Switches SW2-2, SW2-3, and SW2-4 for disabling control axes*

Disable the axis that you do not use. Set them from the last axis to the first axis in order. When only the first axis is disabled, AL. 11 "Switch setting error" occurs. The following lists show the enabled axes that the controller recognizes and the disabled axes that the controller do not recognize.

MR-J4 2-axis servo amplifier		
Disabling control axis switch	**A-axis**	**B-axis**
ON 1 2 3 4 5 6	✔	✔
ON 1 2 3 4 5 6	✔	—
ON 1 2 3 4 5 6	Al. 11 occurs	
ON 1 2 3 4 5 6		

MR-J4 3-axis servo amplifier							
Disabling control axis switch	**A-axis**	**B-axis**	**C-axis**	**Disabling control axis switch**	**A-axis**	**B-axis**	**C-axis**
ON 1 2 3 4 5 6	✔	✔	✔	ON 1 2 3 4 5 6	Al. 11 occurs		
ON 1 2 3 4 5 6	✔	✔	—	ON 1 2 3 4 5 6			
ON 1 2 3 4 5 6	✔	—	—	ON 1 2 3 4 5 6			
ON 1 2 3 4 5 6	Al. 11 occurs			ON 1 2 3 4 5 6			

Tab. 4-22: *Enabling and disabling of axes for MR-J4W2-B and MR-J4W3-B*

✔: Enabled
—: Disabled

WARNING:

When switching the axis selection rotary switch (SW1) and auxiliary axis number setting switch (SW2), use insulated screw driver. Do not use a metal screw driver. Touching patterns on electronic boards, lead of electronic parts, etc. may cause an electric shock.

4.9 Setting the station number for MR-J4-GF(-RJ)

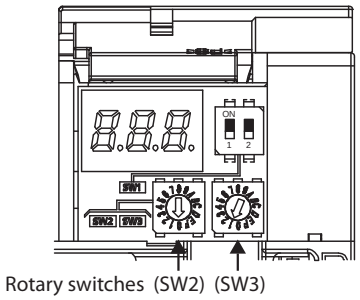

Fig. 4-24:
Switches (SW2/SW3) for setting the station number (MR-J4-GF(-RJ))

MR-J4-GF_Front_controls.eps

Station number setting rotary switch (SW2/SW3)

Set the station number of the servo amplifier in hexadecimal. When the station number is set to a value other than "01H (1)" to "78H (120)", AL. 11.1 (Station number setting error) will occur.

WARNING:

When switching the station number setting rotary switch (SW2/SW3), use an insulated screw driver. Do not use a metal screw driver. Touching patterns on electronic boards, lead of electronic parts, etc. may cause an electric shock.

4.10 Setting the axis number for MR-J4-TM

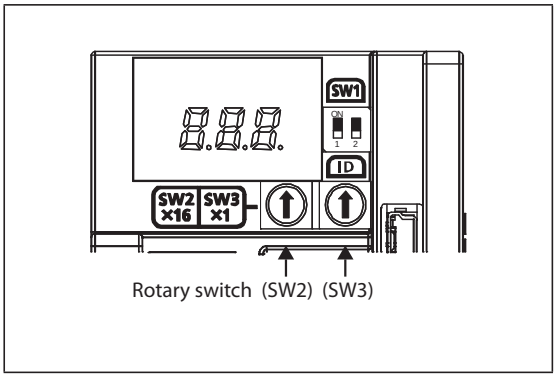

Fig. 4-25:
Switches (SW2/SW3) for setting the axis number (MR-J4-TM)

MR-J4-GF_Front_controls.eps

Axis selection rotary switch (SW2/SW3)

The control axis No. of the servo amplifier can be set. The setting depends on the installed communication module. For the settings, refer to the MR-J4-TM Servo Amplifier Instruction Manual for each communication method.

WARNING:

When switching the station number setting rotary switch (SW2/SW3), use an insulated screw driver. Do not use a metal screw driver. Touching patterns on electronic boards, lead of electronic parts, etc. may cause an electric shock.

4.11 Servo motor

4.11.1 Connecting the servo motor

WARNING:

- ***Ground the servo amplifier and servo motor securely. To prevent an electric shock, always connect the protective earth (PE) terminal (terminal marked with ⏚) of the servo amplifier with the protective earth (PE) of the control box.***
- ***Connect the wires to the correct phase terminals (U, V, W) of the servo amplifier and servo motor. Otherwise, the servo motor will operate improperly.***
- ***Do not connect AC power supply directly to the servo motor. Otherwise, a fault may occur.***

The servo amplifier switches the power transistor on-off to supply power to the servo motor. Depending on the wiring and ground cable routing, the servo amplifier may be affected by the switching noise (due to di/dt and dv/dt) of the transistor. To prevent such a fault, refer to the following diagram and always ground.

To conform to the EMC Directive, refer to the EMC Installation Guidelines (IB(NA)67310).

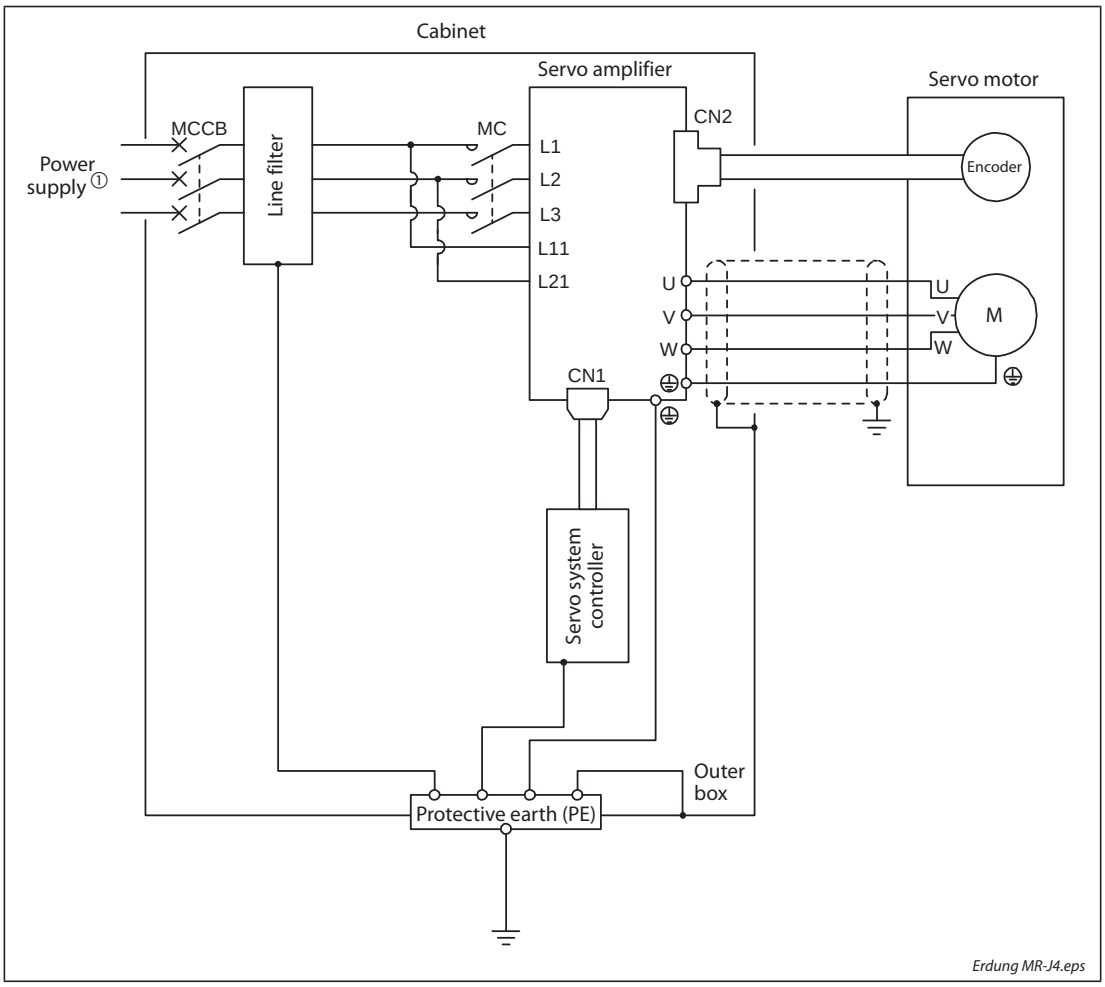

Fig. 4-26: *Grounding of the servo amplifier MR-J4-A, MR-J4-B, MR-J4-GF and MR-J4-TM*

① For 1-phase 200 V AC to 240 V AC, connect the power supply to L1 and L3. Leave L2 open. For power supply specifications, refer to section 4.1.

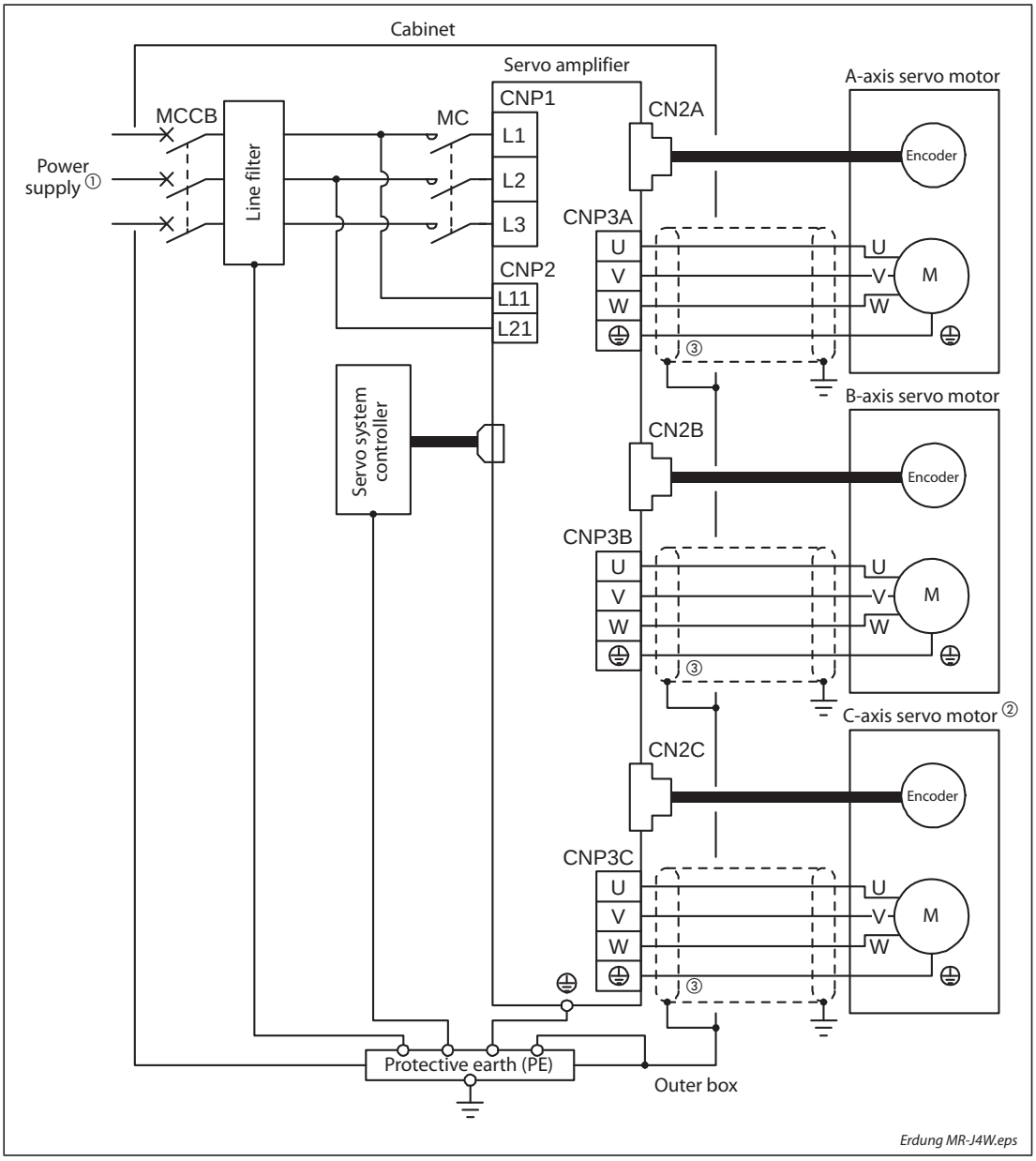

Fig. 4-27: *Grounding of the servo amplifier MR-J4W2-B or MR-J4W3-B*

① For power supply specifications, refer to section 4.1.

② For the MR-J4 3-axis servo amplifier (MR-J4W3-B)

③ Be sure to connect it to ⏚ of CNP3A, CNP3B, and CNP3C. Do not connect the wire directly to the protective earth of the cabinet.

4.11.2 Servo motor with electromagnetic brake

WARNING:

- ***Configure an electromagnetic brake circuit so that it is activated also by an external EMG stop switch.***
- ***The electromagnetic brake is provided for holding purpose and must not be used for ordinary braking.***
- ***Before operating the servo motor, be sure to confirm that the electromagnetic brake operates properly.***
- ***Do not use the 24 V DC interface power supply for the electromagnetic brake. Always use the power supply designed exclusively for the electromagnetic brake. Otherwise, it may cause a malfunction.***

Note the following when the servo motor with an electromagnetic brake is used.

① The brake will operate when the power (24 V DC) turns off.

② The status is base circuit shut-off during RES (Reset) on. When you use the motor in vertical axis system, use MBR (Electromagnetic brake interlock).

③ Turn off SON (Servo-on) after the servo motor stopped.

Connection diagram

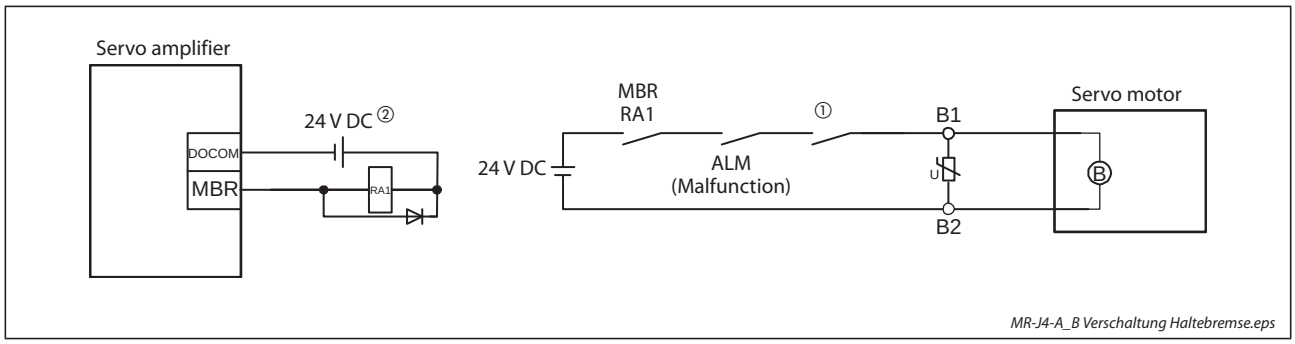

Fig. 4-28: *Wiring of the electromagnetic brake for MR-J4-A(-RJ), MR-J4-B(-RJ), MR-J4-GF(-RJ) and MR-J4-TM*

① Create the circuit in order to shut off by interlocking with the emergency stop switch.

② Do not use the 24 V DC interface power supply for the electromagnetic brake.

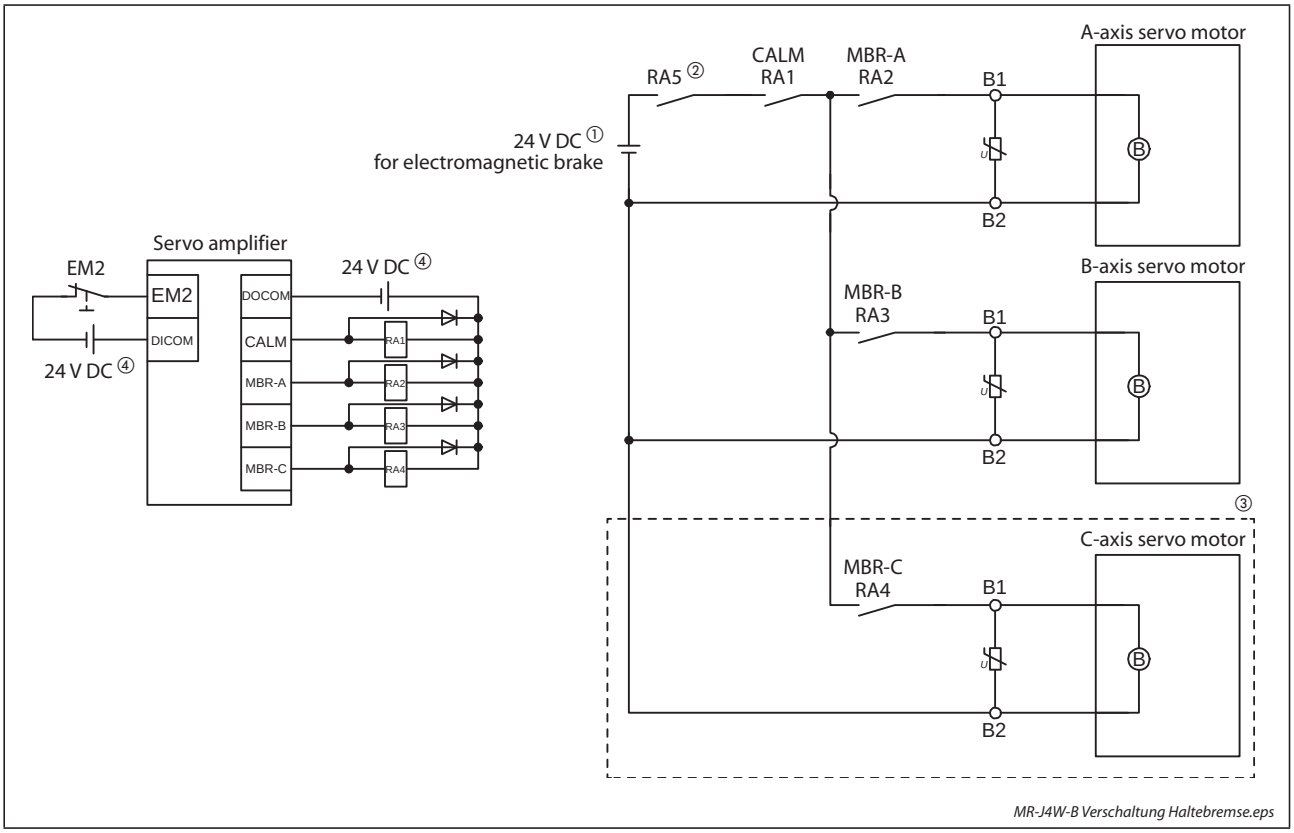

Fig. 4-29: *Wiring of the electromagnetic brake for MR-J4W-B*

① Do not use the 24 V DC interface power supply for the electromagnetic brake.

② Create the circuit in order to shut off by interlocking with the emergency stop switch.

③ This connection is for the MR-J4 3-axis servo amplifier.

④ The illustration of the 24 V DC power supply is divided between input signal and output signal for convenience. However, they can be configured by one.

4.12 Forced stop

NOTES

When alarms not related to the forced stop function occur, control of motor deceleration can not be guaranteed.

When SSCNET III/H communication brake occurs, forced stop deceleration will operate (only MR-J4(W)-B).

In the torque control mode, the forced stop deceleration function is not available.

4.12.1 Forced stop deceleration function

When EM2 is turned off, dynamic brake will start to stop the servo motor after forced stop deceleration. During this sequence, the display shows AL. E6 "Servo forced stop warning".

During normal operation, do not use EM2 (Forced stop 2) to alternate stop and drive. The servo amplifier life may be shortened.

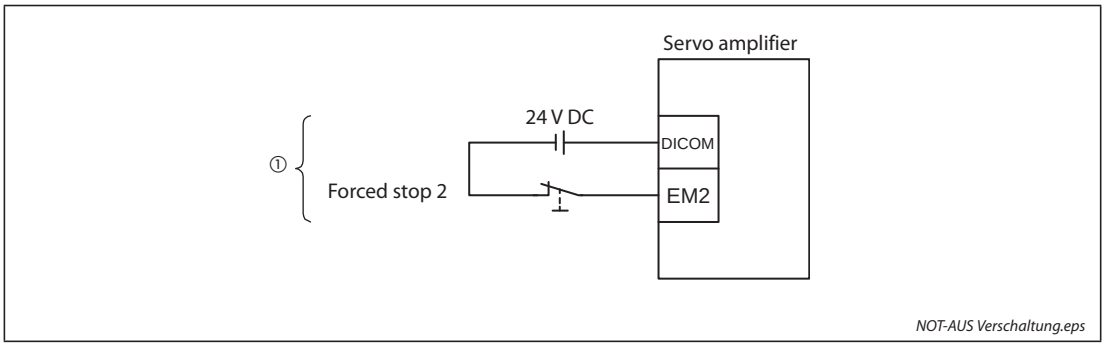

Fig. 4-30: *Emergency switch*

① This diagram is for sink I/O interface. For source I/O interface, refer to section 4.3.2.

4.13 Wiring examples

Wire the power supply/main circuit as shown below. Connect the 1-phase 200 V AC to 240 V AC power supply to L1 and L3. One of the connecting destinations is different from MR-J3 Series Servo Amplifier's. When using MR-J4 as a replacement for MR-J3, be careful not to connect the power to L2.

Configure the wirings so that the main circuit power supply is shut off and SON (Servo-on) is turned off after deceleration to a stop due to an alarm occurring, enabled servo forced stop, etc. A molded-case circuit breaker (MCCB) must be used with the input cables of the main circuit power supply.

NOTE

One model of the servo amplifier series MR-J4-A(-RJ), MR-J4-B(-RJ), MR-J4W-B, MR-J4-GF(-RJ) and MR-J4-TM is only shown in the wiring examples. Please refer to the respective user manual for the wiring of other servo amplifier models.

4.13.1 Servo amplifier series MR-J4-A(-RJ)

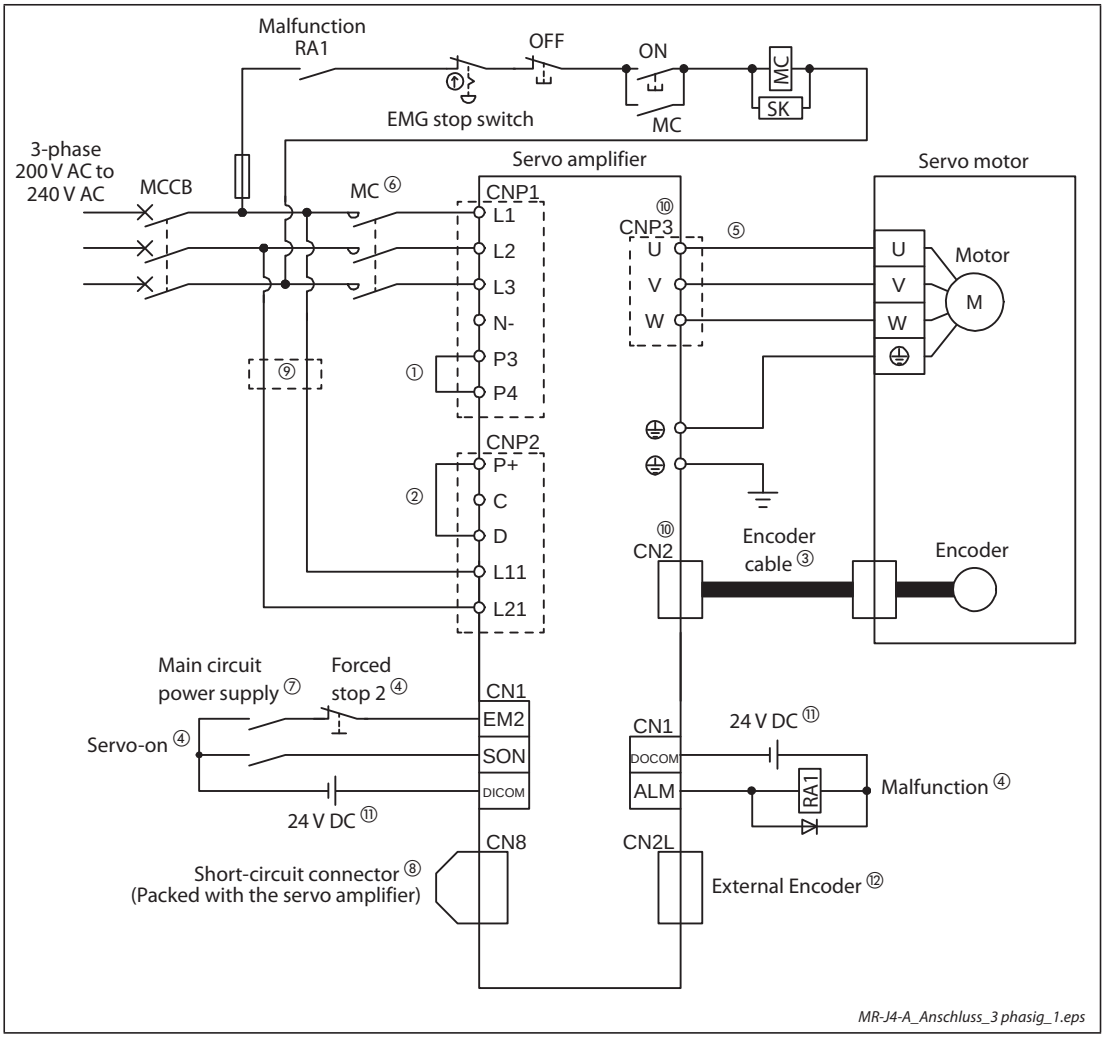

Fig. 4-31: *Wiring of servo amplifier MR-J4-10A(-RJ) to MR-J4-350A(-RJ)*

① Between P3 and P4 is connected by default. When using the power factor improving DC reactor, remove the short bar between P3 and P4. Refer to the instruction manual for details. Additionally, a power factor improving DC reactor and power factor improving AC reactor cannot be used simultaneously.

② Always connect between P+ and D terminals (factory-wired). When using the regenerative option, refer to the instruction manual.

③ For the encoder cable, use of the option cable is recommended. For selecting cables, refer to "Servo Motor Instruction Manual (Vol. 3)".

④ This diagram shows sink I/O interface. For source I/O interface, refer to section 4.3.2.

⑤ For connecting servo motor power wires, refer to "Servo Motor Instruction Manual (Vol. 3)"

⑥ Use a magnetic contactor with an operation delay time (interval between current being applied to the coil until closure of contacts) of 80 ms or less. Depending on the main circuit voltage and operation pattern, bus voltage decreases, and that may cause the forced stop deceleration to shift to the dynamic brake deceleration. When dynamic brake deceleration is not required, slow the time to turn off the magnetic contactor.

⑦ Configure a circuit to turn off EM2 when the main circuit power is turned off to prevent an unexpected restart of the servo amplifier.

⑧ When not using the STO function, attach the short-circuit connector came with a servo amplifier.

⑨ When wires used for L11 and L21 are thinner than wires used for L1, L2, and L3, use a molded-case circuit breaker. (Refer to the instruction manual.)

⑩ Connecting a servo motor of the wrong axis to U, V, W, or CN2 of the servo amplifier may cause a malfunction.

⑪ The illustration of the 24 V DC power supply is divided between input signal and output signal for convenience. However, they can be configured by one.

⑫ This is for the MR-J4-□A-RJ servo amplifier. The MR-J4-□A servo amplifier does not have the CN2L connector. When using an MR-J4-□A-RJ servo amplifier in the linear servo system or in the fully closed loop system, connect an external encoder to this connector. Refer to the "Linear Encoder Instruction Manual" for the compatible external encoders.

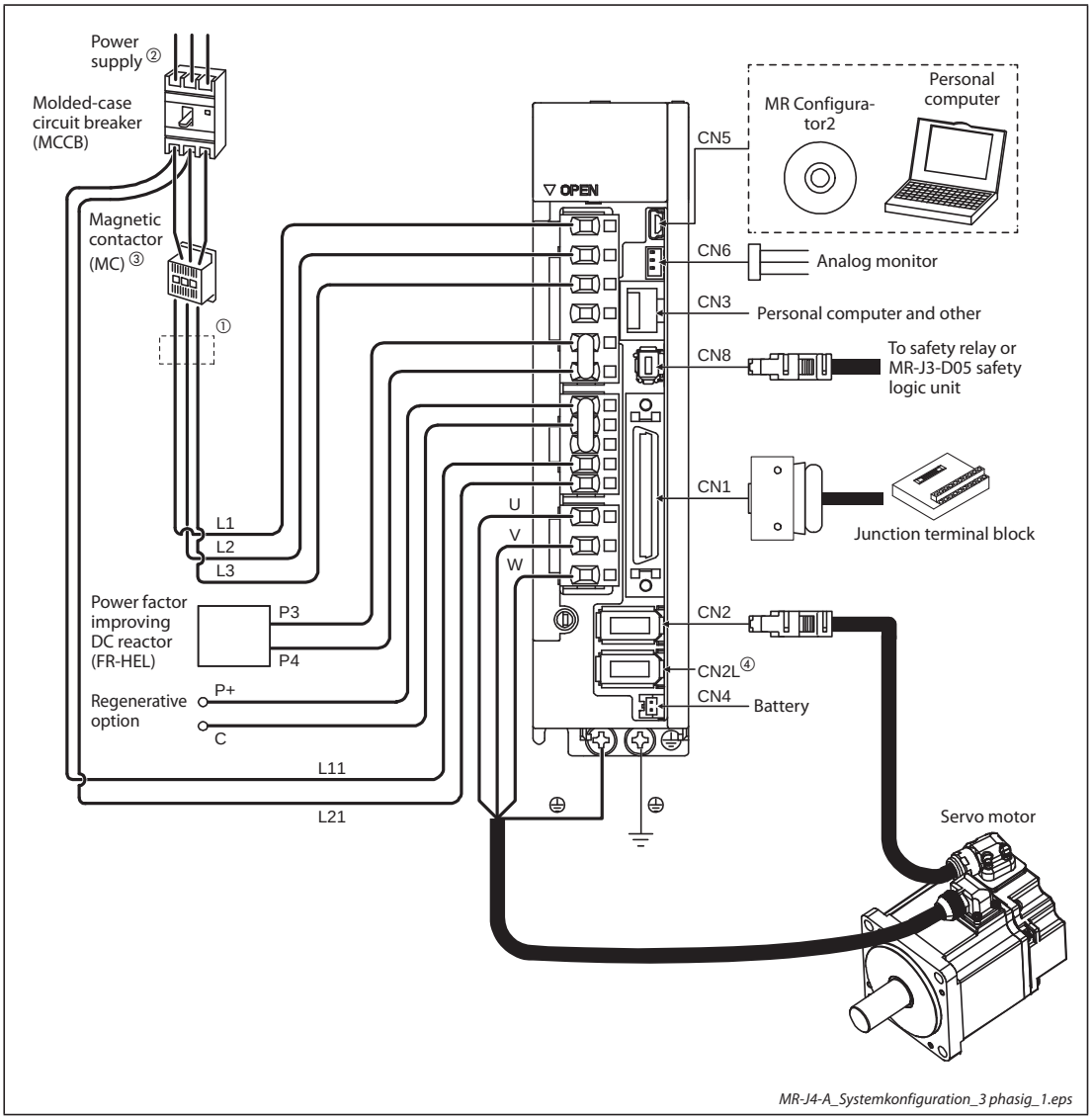

Fig. 4-32: *System configuration for MR-J4-20A-RJ*

① The power factor improving AC reactor can also be used. In this case, the power factor improving DC reactor cannot be used. When not using the power factor improving DC reactor, short P3 and P4.

② For 1-phase 200 V AC to 240 V AC, connect the power supply to L1 and L3. Leave L2 open. For the power supply specifications, refer to section 4.1.

③ Depending on the main circuit voltage and operation pattern, bus voltage decreases, and that may cause the forced stop deceleration to shift to the dynamic brake deceleration. When dynamic brake deceleration is not required, slow the time to turn off the magnetic contactor.

④ This is for the MR-J4-□A-RJ servo amplifier. The MR-J4-□A servo amplifier does not have the CN2L connector. When using an MR-J4-□A-RJ servo amplifier in the linear servo system or in the fully closed loop system, connect an external encoder to this connector. Refer to the “Linear Encoder Instruction Manual” for the compatible external encoders.

4.13.2 Servo amplifier series MR-J4-B(-RJ)

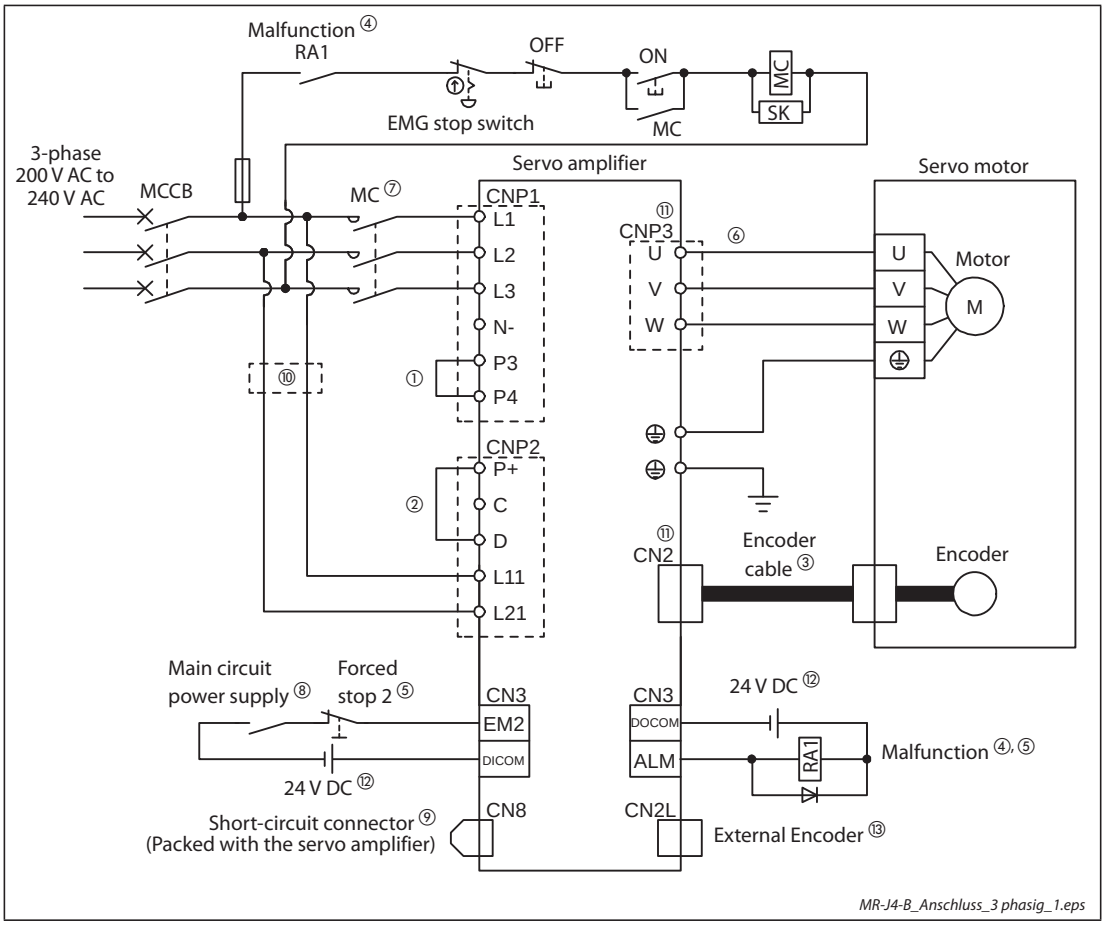

Fig. 4-33: *Wiring of servo amplifier MR-J4-10B(-RJ) to MR-J4-350B(-RJ)*

① Between P3 and P4 is connected by default. When using the power factor improving DC reactor, remove the short bar between P3 and P4. Refer to the instruction manual for details. Additionally, a power factor improving DC reactor and power factor improving AC reactor cannot be used simultaneously.

② Always connect between P+ and D terminals. (factory-wired) When using the regenerative option, refer to the instruction manual.

③ For the encoder cable, use of the option cable is recommended. For selecting cables, refer to "Servo Motor Instruction Manual (Vol. 3)".

④ If disabling ALM (Malfunction) output with the parameter, configure up the power supply circuit which switches off the magnetic contactor after detection of alarm occurrence on the controller side.

⑤ This diagram is for sink I/O interface. For source I/O interface, refer to section 4.3.2.

⑥ For connecting servo motor power wires, refer to "Servo Motor Instruction Manual (Vol. 3)".

⑦ Use a magnetic contactor with an operation delay time (interval between current being applied to the coil until closure of contacts) of 80 ms or less. Depending on the main circuit voltage and operation pattern, bus voltage decreases, and that may cause the forced stop deceleration to shift to the dynamic brake deceleration. When dynamic brake deceleration is not required, slow the time to turn off the magnetic contactor.

⑧ Configure a circuit to turn off EM2 when the main circuit power is turned off to prevent an unexpected restart of the servo amplifier.

⑨ When not using the STO function, attach the short-circuit connector came with a servo amplifier.

⑩ When wires used for L11 and L21 are thinner than wires used for L1, L2, and L3, use a molded-case circuit breaker. (Refer to the instruction manual.)

⑪ Connecting a servo motor of the wrong axis to U, V, W, or CN2 of the servo amplifier may cause a malfunction.

⑫ The illustration of the 24 V DC power supply is divided between input signal and output signal for convenience. However, they can be configured by one

⑬ This is for MR-J4-□B-RJ servo amplifier. MR-J4-□B servo amplifier does not have CN2L connector. When using MR-J4-□B-RJ servo amplifier in the linear servo system or in the fully closed loop system, connect an external encoder to this connector. Refer to the "Linear Encoder Instruction Manual" for the compatible external encoders.

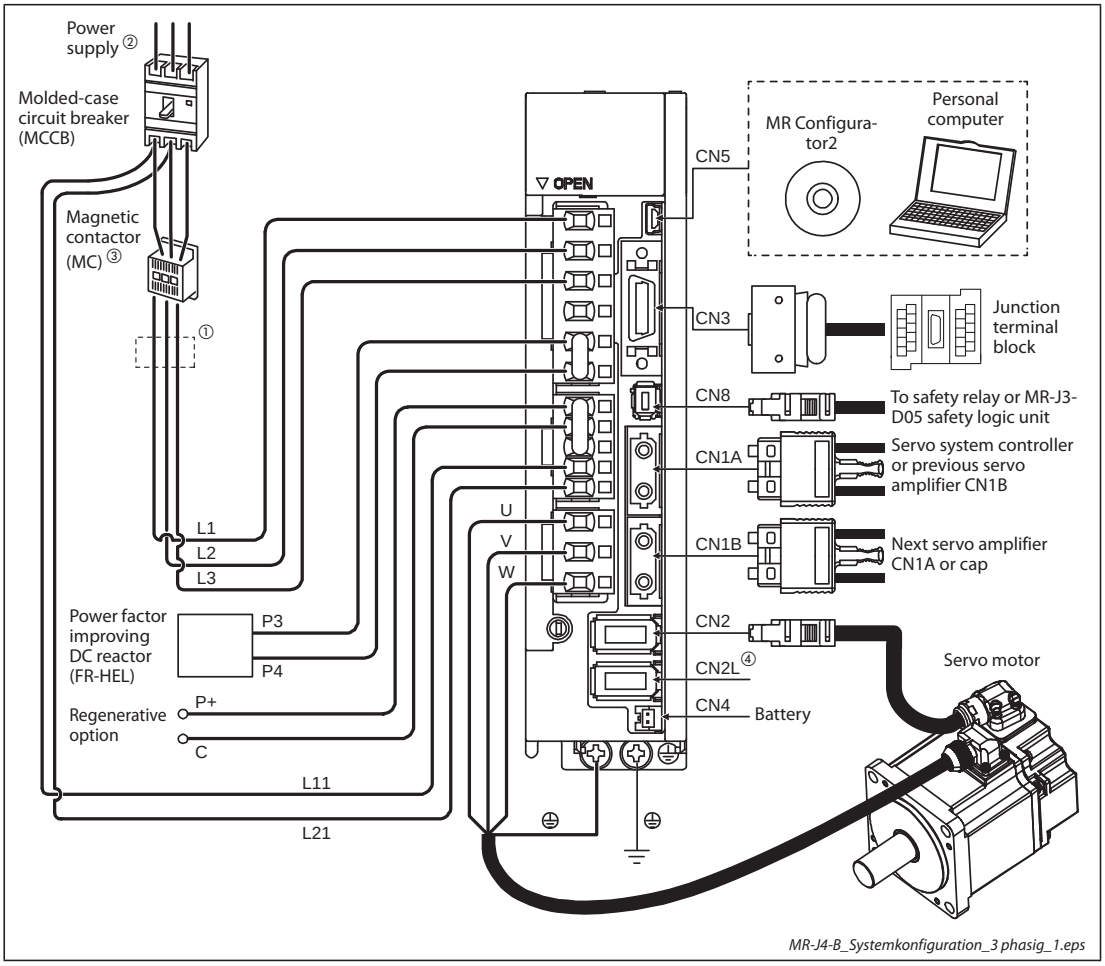

Fig. 4-34: *System configuration for MR-J4-20B-RJ*

① The power factor improving AC reactor can also be used. In this case, the power factor improving DC reactor cannot be used. When not using the power factor improving DC reactor, short P3 and P4.

② For 1-phase 200 V AC to 240 V AC, connect the power supply to L1 and L3. Leave L2 open. Refer to section 4.1 for the power supply specifications.

③ Depending on the main circuit voltage and operation pattern, bus voltage decreases, and that may cause the forced stop deceleration to shift to the dynamic brake deceleration. When dynamic brake deceleration is not required, slow the time to turn off the magnetic contactor.

④ This is for MR-J4-□B-RJ servo amplifier. MR-J4-□B servo amplifier does not have CN2L connector. When using MR-J4-□B-RJ servo amplifier in the linear servo system or in the fully closed loop system, connect an external encoder to this connector. Refer to the "Linear Encoder Instruction Manual" for the compatible external encoders.

4.13.3 Multi axes servo amplifier series MR-J4W-B

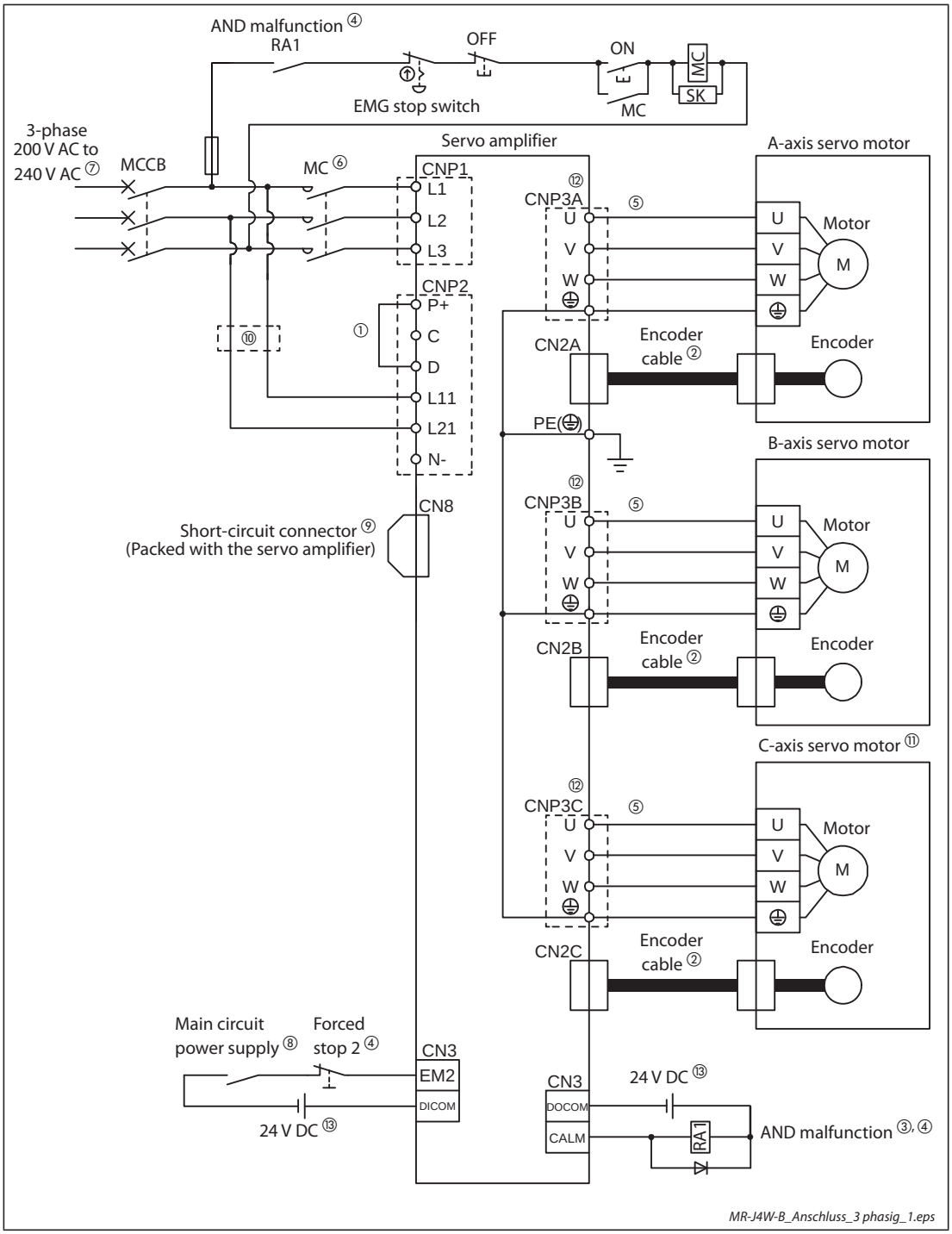

Fig. 4-35: *Wiring of servo amplifier MR-J4W-B*

① Between P+ and D is connected by default. When using the regenerative option, refer to the instruction manual.

② For the encoder cable, use of the option cable is recommended. For selecting cables, refer to "Servo Motor Instruction Manual (Vol. 3)".

③ This circuit is an example of stopping all axes when an alarm occurs. If disabling CALM (AND malfunction) output with the parameter, configure up the power supply circuit which switches off the magnetic contactor after detection of alarm occurrence on the controller side.

④ This diagram is for sink I/O interface. For source I/O interface, refer to section 4.3.2.

⑤ For connecting servo motor power wires, refer to "Servo Motor Instruction Manual (Vol. 3)".

⑥ Use a magnetic contactor with an operation delay time (interval between current being applied to the coil until closure of contacts) of 80 ms or less. Depending on the main circuit voltage and operation pattern, bus voltage decreases, and that may cause the forced stop deceleration to shift to the dynamic brake deceleration. When dynamic brake deceleration is not required, slow the time to turn off the magnetic contactor.

⑦ For 1-phase 200 V AC to 240 V AC, connect the power supply to L1 and L3. Leave L2 open. Refer to section 4.1 for the power supply specifications.

⑧ Configure up a circuit to turn off EM2 when the main circuit power is turned off to prevent an unexpected restart of the servo amplifier.

⑨ When not using the STO function, attach a short-circuit connector supplied with a servo amplifier.

⑩ When wires used for L11 and L21 are thinner than wires used for L1, L2, and L3, use a molded-case circuit breaker (refer to the instruction manual).

⑪ For the MR-J4 3-axis servo amplifier

⑫ Connecting a servo motor for different axis to the CNP3A, CNP3B, or CN3C connector may cause a malfunction.

⑬ The illustration of the 24 V DC power supply is divided between input signal and output signal for convenience. However, they can be configured by one.

4.13.4 Servo amplifier series MR-J4-GF(-RJ)

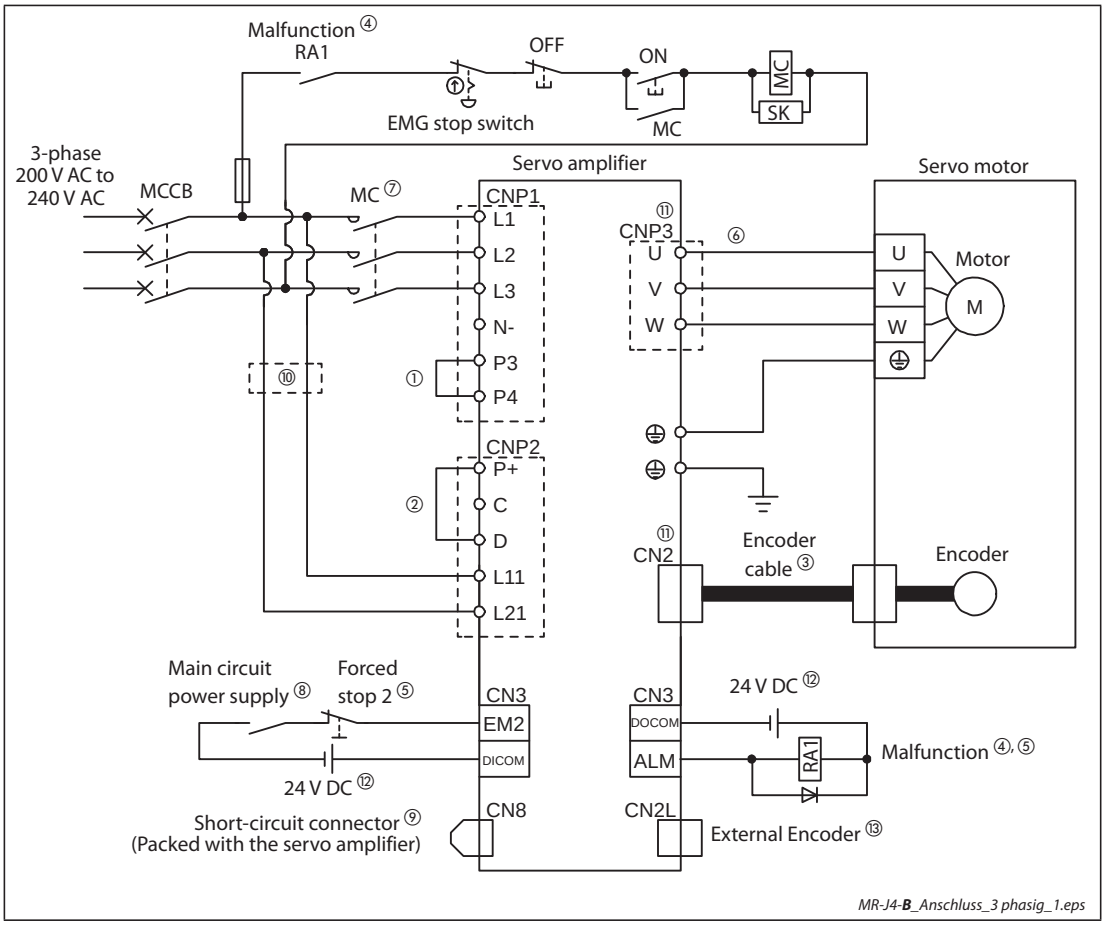

Fig. 4-36: *Wiring of servo amplifier MR-J4-10GF(-RJ) to MR-J4-350GF(-RJ)*

① Between P3 and P4 is connected by default. When using the power factor improving DC reactor, remove the short bar between P3 and P4. Refer to the instruction manual for details. Additionally, a power factor improving DC reactor and power factor improving AC reactor cannot be used simultaneously.

② Always connect between P+ and D terminals. (factory-wired) When using the regenerative option, refer to the instruction manual.

③ For the encoder cable, use of the option cable is recommended. For selecting cables, refer to "Servo Motor Instruction Manual (Vol. 3)".

④ If disabling ALM (Malfunction) output with the parameter, configure up the power supply circuit which switches off the magnetic contactor after detection of alarm occurrence on the controller side.

⑤ This diagram is for sink I/O interface. For source I/O interface, refer to section 4.3.2.

⑥ For connecting servo motor power wires, refer to "Servo Motor Instruction Manual (Vol. 3)".

⑦ Use a magnetic contactor with an operation delay time (interval between current being applied to the coil until closure of contacts) of 80 ms or less. Depending on the main circuit voltage and operation pattern, bus voltage decreases, and that may cause the forced stop deceleration to shift to the dynamic brake deceleration. When dynamic brake deceleration is not required, slow the time to turn off the magnetic contactor.

⑧ Configure a circuit to turn off EM2 when the main circuit power is turned off to prevent an unexpected restart of the servo amplifier.

⑨ When not using the STO function, attach the short-circuit connector came with a servo amplifier.

⑩ When wires used for L11 and L21 are thinner than wires used for L1, L2, and L3, use a molded-case circuit breaker. (Refer to the instruction manual.)

⑪ Connecting a servo motor of the wrong axis to U, V, W, or CN2 of the servo amplifier may cause a malfunction.

⑫ The illustration of the 24 V DC power supply is divided between input signal and output signal for convenience. However, they can be configured by one

⑬ This is for MR-J4-□GF-RJ servo amplifier. MR-J4-□GF servo amplifier does not have CN2L connector. When using MR-J4-□GF-RJ servo amplifier in the linear servo system or in the fully closed loop system, connect an external encoder to this connector. Refer to the "Linear Encoder Instruction Manual" for the compatible external encoders.

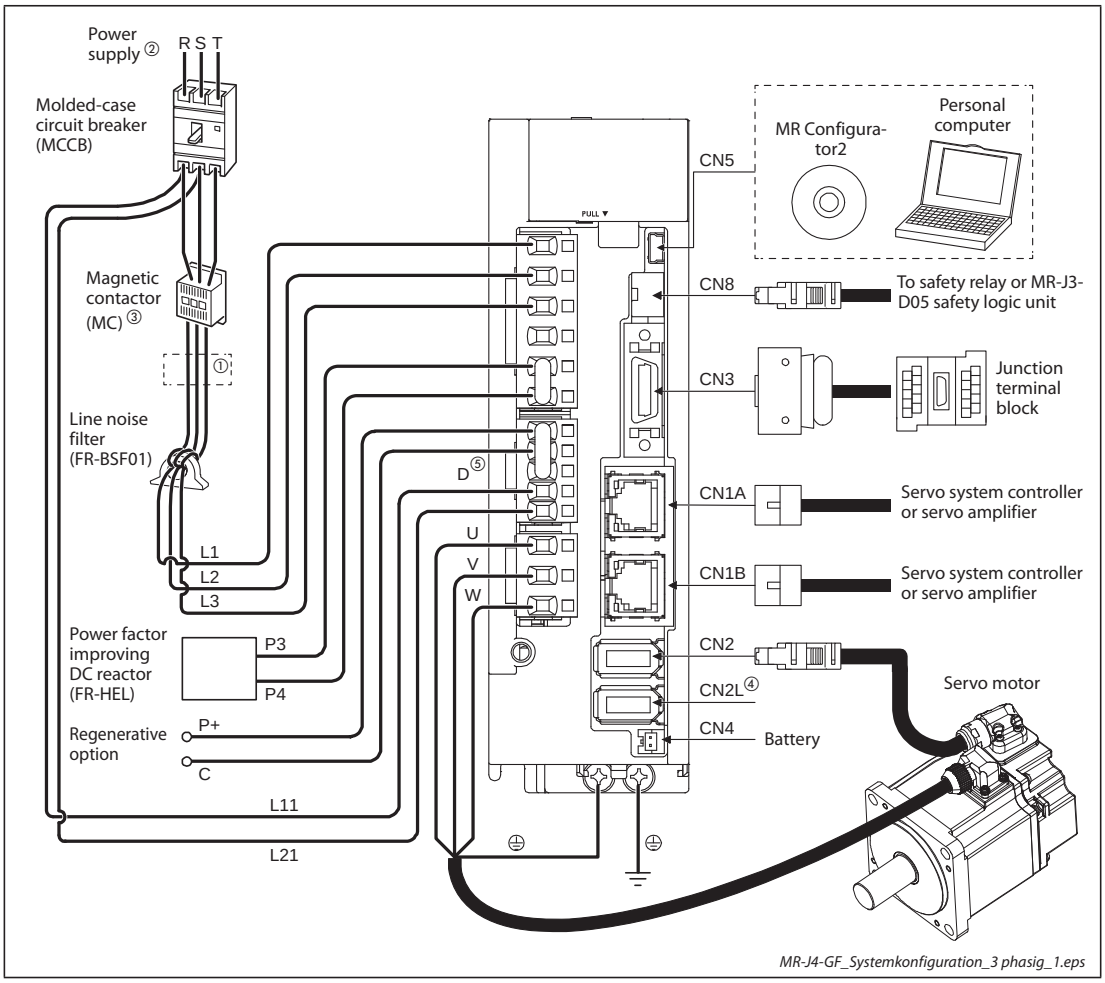

Fig. 4-37: *System configuration for MR-J4-20GF-RJ*

① The power factor improving AC reactor can also be used. In this case, the power factor improving DC reactor cannot be used. When not using the power factor improving DC reactor, short P3 and P4.

② For 1-phase 200 V AC to 240 V AC, connect the power supply to L1 and L3. Leave L2 open. Refer to section 4.1 for the power supply specifications.

③ Depending on the main circuit voltage and operation pattern, bus voltage decreases, and that may cause the forced stop deceleration to shift to the dynamic brake deceleration. When dynamic brake deceleration is not required, slow the time to turn off the magnetic contactor.

④ This is for MR-J4-□GF-RJ servo amplifier. MR-J4-□GF servo amplifier does not have CN2L connector. When using MR-J4-□GF-RJ servo amplifier in the linear servo system or in the fully closed loop system, connect an external encoder to this connector. Refer to the "Linear Encoder Instruction Manual" for the compatible external encoders.

⑤ Always connect between P+ and D terminals. When using the regenerative option, refer to the instruction manual of the servo amplifier.

4.13.5 Servo amplifier series MR-J4-TM

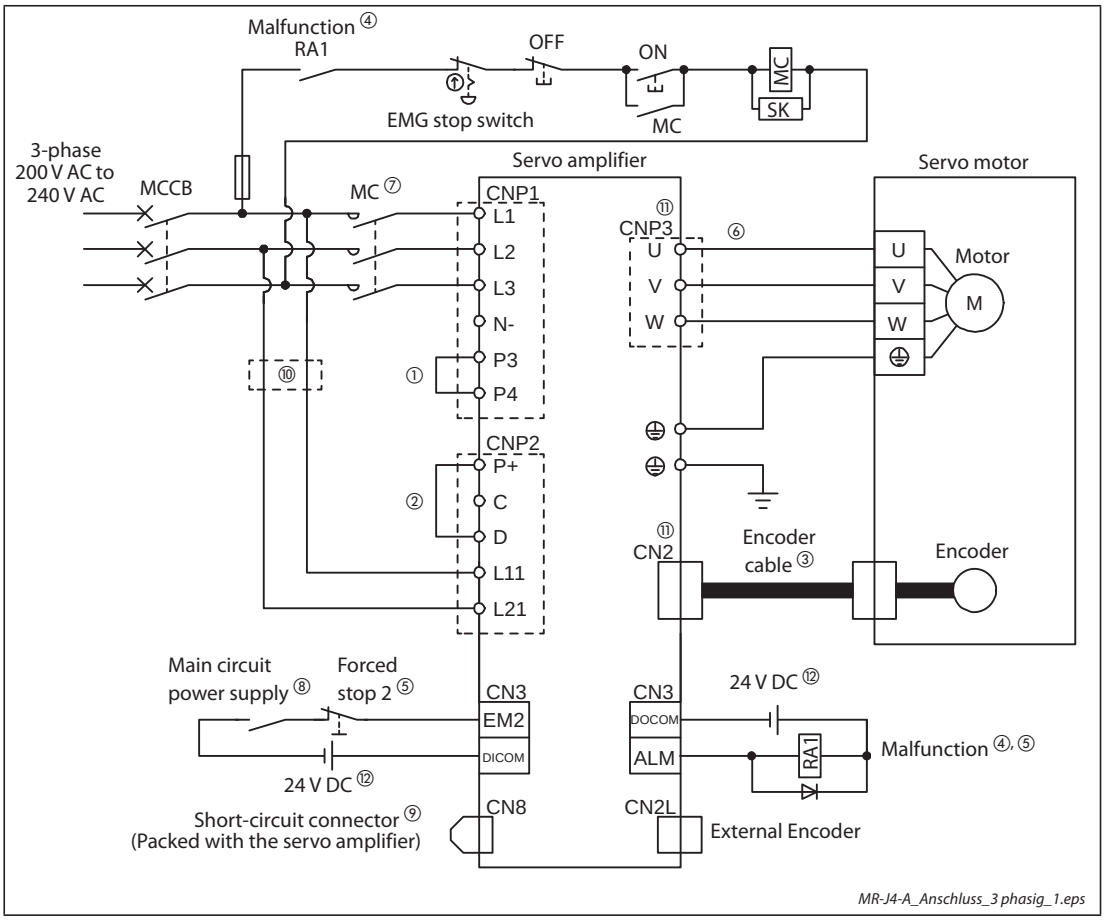

Fig. 4-38: *Wiring of servo amplifier MR-J4-10TM to MR-J4-350TM*

① Between P3 and P4 is connected by default. When using the power factor improving DC reactor, remove the short bar between P3 and P4. Refer to the instruction manual for details. Additionally, a power factor improving DC reactor and power factor improving AC reactor cannot be used simultaneously.

② Always connect between P+ and D terminals. (factory-wired) When using the regenerative option, refer to the instruction manual.

③ For the encoder cable, use of the option cable is recommended. For selecting cables, refer to "Servo Motor Instruction Manual (Vol. 3)".

④ If disabling ALM (Malfunction) output with the parameter, configure up the power supply circuit which switches off the magnetic contactor after detection of alarm occurrence on the controller side.

⑤ This diagram is for sink I/O interface. For source I/O interface, refer to section 4.3.2.

⑥ For connecting servo motor power wires, refer to "Servo Motor Instruction Manual (Vol. 3)".

⑦ Use a magnetic contactor with an operation delay time (interval between current being applied to the coil until closure of contacts) of 80 ms or less. Depending on the main circuit voltage and operation pattern, bus voltage decreases, and that may cause the forced stop deceleration to shift to the dynamic brake deceleration. When dynamic brake deceleration is not required, slow the time to turn off the magnetic contactor.

⑧ Configure a circuit to turn off EM2 when the main circuit power is turned off to prevent an unexpected restart of the servo amplifier.

⑨ When not using the STO function, attach the short-circuit connector came with a servo amplifier.

⑩ When wires used for L11 and L21 are thinner than wires used for L1, L2, and L3, use a molded-case circuit breaker. (Refer to the instruction manual.)

⑪ Connecting a servo motor of the wrong axis to U, V, W, or CN2 of the servo amplifier may cause a malfunction.

⑫ The illustration of the 24 V DC power supply is divided between input signal and output signal for convenience. However, they can be configured by one.

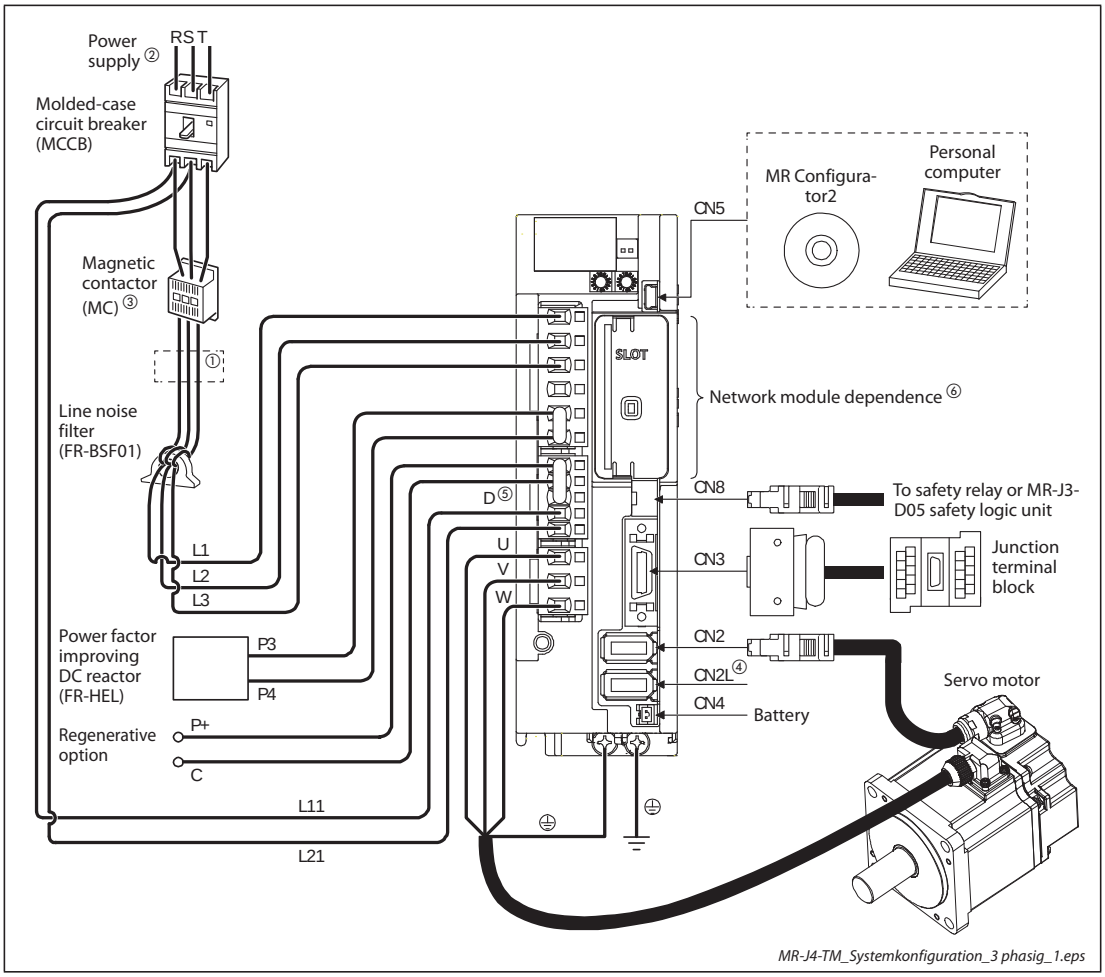

Fig. 4-39: *System configuration for MR-J4-20TM*

① The power factor improving AC reactor can also be used. In this case, the power factor improving DC reactor cannot be used. When not using the power factor improving DC reactor, short P3 and P4.

② For 1-phase 200 V AC to 240 V AC, connect the power supply to L1 and L3. Leave L2 open. Refer to section 4.1 for the power supply specifications.

③ Depending on the main circuit voltage and operation pattern, bus voltage decreases, and that may cause the forced stop deceleration to shift to the dynamic brake deceleration. When dynamic brake deceleration is not required, slow the time to turn off the magnetic contactor.

④ When using servo amplifier in the linear servo system or in the fully closed loop system, connect an external encoder to this connector. Refer to the "Linear Encoder Instruction Manual" for the compatible external encoders.

⑤ Always connect between P+ and D terminals. When using the regenerative option, refer to the instruction manual of the servo amplifier.

⑥ For the network module connections, refer to the MR-J4-TM Servo Amplifier Instruction Manual for each communication method.

4.14 EM-Compatible Installation

Fast switching of electrical currents and voltages, which naturally also occurs when servo amplifiers are used, generates radio frequency interference (RF noise) that can be propagated both along cables and through the air. The power and signal cables of the servo amplifier can act as noise transmission antennas. Because of this the cabling work needs to be performed with the utmost care. The cables connecting the servo amplifier and the motor are a particularly powerful source of potential interference.

In the European Union several EMC (electromagnetic compatibility) directives have been passed with regulations for the limitation of interference generated by variable-speed drive systems. To conform to these regulations you must observe some basic guidelines when you are planning, installing and wiring your systems:

- To reduce noise radiation install the equipment in a closed and properly earthed switchgear cabinet made of metal.
- Ensure that everything is properly earthed.
- Use shielded cables.
- Install sensitive equipment as far away as possible from interference sources or install the interference sources in a separate switchgear cabinet.
- Keep signal and power cables separate. Avoid routing interference-suppressed cables (e.g. power supply cables) and interference-prone cables (e.g. shielded motor cables) together for more than short distances.

4.14.1 EM-compatible switchgear cabinet installation

The design of the switchgear cabinet is critical for compliance with the EMC directives. Please follow the following guidelines:

- Use an earthed cabinet made of metal.
- Use conductive seals between the cabinet door and chassis and connect the door and the chassis with a thick, braided earth cable.
- If an EMC filter is installed make sure that it has a good electrically conductive connection to the installation panel (remove paint etc). Ensure that the base on which the equipment is installed is also properly connected to the switchgear cabinet earth.
- All cabinet plates should be welded or screwed together not more than 10 cm apart to limit transparency to RF noise. The diameters of any openings and cable glands in the cabinet should not exceed 10 cm and there should not be any unearthed components anywhere in the cabinet. If larger openings are required they must be covered with wire mesh. Always remove paint etc. between all metal-on-metal contacts to ensure good conductivity for example between the wire mesh covers and the cabinet.
- If servo amplifiers and controllers must be installed in the same cabinet they should be kept as far away from one another as possible. It is better to use separate cabinets if possible. If you must install everything in a single cabinet you can separate the servo amplifiers and controllers with a metal panel.
- Earth the installed equipment with short, thick earth conductors or suitable earthing strips. Earthing strips with a large surface area are better for earthing RFI signals than equipotential bonding conductors with large cross-sections.

4.14.2 Wiring

All analog and digital signal cables should be shielded or routed in metal cable conduits.

At the entrance point to the chassis run the cable through a metal cable gland or fasten it with a P or U type cable clamp, connecting the shielding to the earth either with the gland or the clamp (see illustration below). If you use a cable clamp install it as near as possible to the cable entry point to keep the distance to the earthing point as short as possible. To keep the unshielded portion of the cable (RFI transmission antenna!) as short as possible ensure that the end of the motor cable shielding is as close as possible to the connection terminal without causing a risk of earth faults or short circuits.

When using a P or U clamp make sure that the clamp is installed cleanly and that it does not pinch the cable more than necessary.

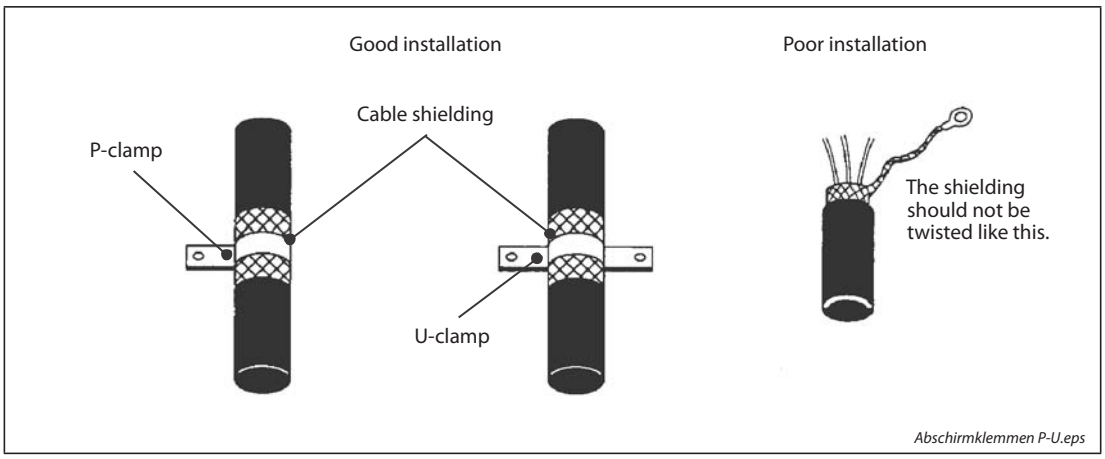

Route control signal cables at least 30 cm away from all power cables. Do not route the power supply cables or the cables connecting the servo amplifier and the motor in parallel to control signal cables, telephone cables or data cables.

If possible, all control signal cables to and from the servo amplifier should only be routed inside the earthed switchgear cabinet. If routing control signal cables outside the cabinet is not possible always use shielded cables, as signal cables can also function as antennas. The shielding of the cables must always be earthed. To prevent corruption of sensitive analog signals (e.g. the 0–5 V analog frequency setting signal) by currents circulating in the earthing system it may be necessary to earth only one end of the cable shielding. In such cases always earth the shielding at the servo amplifier end of the cable.

Installation of standard ferrite cores on the signal cables can further improve RFI suppression. The cable should be wound around the core several times and the core should be installed as close to the servo amplifier as possible.

Motor connection cables should always be as short as possible. Long cables can sometimes trigger earth fault protection mechanisms. Avoid unnecessarily long cables and always use the shortest possible route for the cables.

It should go without saying that the motor itself should also be properly earthed.

4.14.3 Optional EMC filters

EMC filters (mains RFI suppression filters) significantly reduce interference. They are installed between the mains power supply and the servo amplifier of the MR-J4 series.

Wiring 1-phase

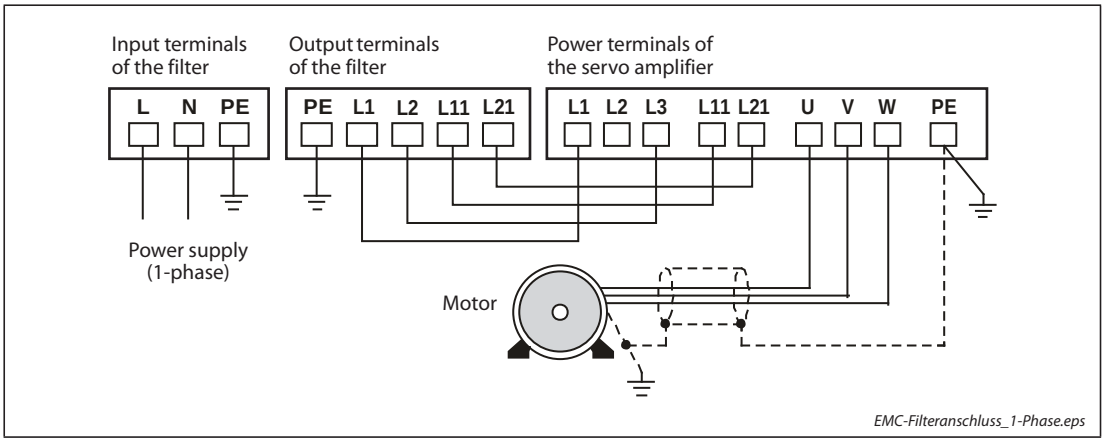

Fig. 4-40: *Wiring of the EMC filter with the servo amplifier for one phase power supply*

Wiring 3-phase

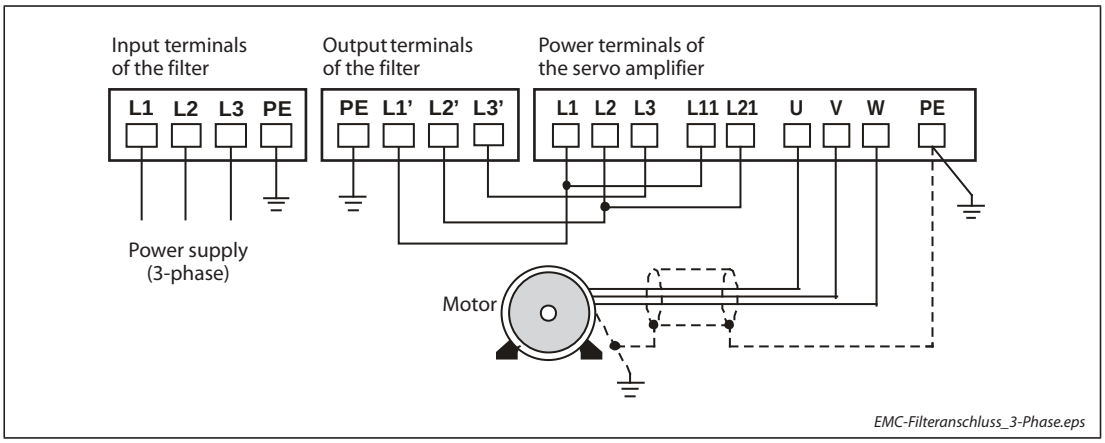

Fig. 4-41: *Wiring of the EMC filter with the servo amplifier for three phase power supply*

WARNING:

- ***These filters are NOT designed for use in power networks (IT type). When the noise filters are operated leakage currents are discharged to earth. This can trigger upstream protective devices (as RCDs), particularly when there are unbalanced mains voltages, mains phase failures or switching activities on the input side of the filter.***
  For further information please refer to the Mitsubishi manual for servo amplifiers and the EMC Installation Guidelines which contain detailed information about EM-compatible installation.
- ***Connect the 1-phase 200 V AC to 240 V AC power supply to the terminals L1 and L3 of the servo amplifier. One of the connecting destinations is different from MR-J3 Series Servo Amplifier's. When using MR-J4 as a replacement for MR-J3, be careful not to connect the power to L2.***

5 Startup

5.1 Preparations

Before switching on the servo amplifier for the first time

Check all the following points carefully before switching on a servo amplifier for the first time:

- Has all the wiring been performed correctly? Check the power supply connections particularly carefully: Single-phase to L1 and L3, 3-phase to L1, L2 and L3.
- Double-check for damaged cables and insufficiently insulated terminals to eliminate any possibility of short circuits.
- Is the servo amplifier properly earthed? Double-check for possible earth faults and short circuits in the output circuit.
- Check that all screws, connection terminals and other cable connections are connected correctly and firmly.

Cable routing

- The wiring cables are free from excessive force.
- The encoder cable should not be used in excess of its flex life.
- The connector part of the servo motor should not be strained.

Environment

Check the following point before initial startup:

- Signal cables and power cables are not shorted by wire offcuts, metallic dust or the like.

Parameters

Check the setting of parameters by the display of the controller or setup software.

DANGER:

- ***Before starting operation, check the parameters. Improper settings may cause some machines to operate unexpectedly.***
- ***The servo amplifier heat sink, regenerative resistor, servo motor, etc. may be hot while power is on or for some time after power-off. Take safety measures, e.g. provide covers, to prevent accidental contact of hands and parts (cables, etc.) with them.***
- ***During operation, never touch the rotor of the servo motor. Otherwise, it may cause injury.***

WARNING:

Incorrect parameter settings can damage or (in extreme cases) even destroy the connected motor. Take great care when you are setting the parameters and double check the electrical and mechanical specifications of the motor, your entire drive system and the connected machine before proceeding.

5.2 Startup of servo amplifier series MR-J4-A(-RJ)

5.2.1 Power on and off the servo amplifier

Procedure in position control mode.

Power on

Switch power on in the following procedure. Always follow this procedure at power-on.

① Switch off SON (Servo-on).

② Make sure that a command pulse train is not input.

③ Switch on the main circuit power supply and control circuit power supply.
When main circuit power/control circuit power is switched on, the display shows "C" (Cumulative-feedback pulses), and in 2 s later, shows data.

Power off

① Make sure that a command pulse train is not input.

② Switch off SON (Servo-on).

③ Switch off the main circuit power supply and control circuit power supply.

NOTES

The power on and off procedure for the operating modes speed control and torque control are not described here. For details about this please refer to the respective instruction manuals of the servo amplifier series.

In the absolute position detection system, first power-on results in AL. 25 (Absolute position erased) and the servo system cannot be switched on. The alarm can be deactivated by then switching power off once and on again.

Also, if power is switched on at the servo motor speed of 3000 1/min or higher, position mismatch may occur due to external force or the like. Power must therefore be switched on when the servo motor is at a stop.

5.2.2 Stop of operation

If any of the following situations occurs, the servo amplifier suspends the running of the servo motor and brings it to a stop. Refer to the instruction manual for the servo motor with an electromagnetic brake.

Operation/command	Stopping condition
Switch off SON (Servo-on)	The main circuit is shut off and the servo motor coasts.
Alarm occurrence	The servo motor decelerates to a stop with the command. With some alarms, however, the dynamic brake operates to bring the servo motor to a stop. (See note)
EM2 (Forced stop 2) off	The servo motor decelerates to a stop with the command. AL. E6 (Servo forced stop warning) occurs. EM2 has the same function as EM1 in the torque control mode. Refer to the instruction manual for EM1.
STO (STO1, STO2) off	The main circuit is shut off and the dynamic brake operates to bring the servo motor to a stop.
LSP (Forward rotation stroke end) of LSN (Reverse rotation stroke end) off	It will bring the motor to a sudden stop and make it servo-locked. It can be run in the opposite direction.

Tab. 5-1: *Stop of operation by the servo amplifier*

NOTE

Refer to “MELSERVO J4 Servo Amplifier Instruction Manual (Troubleshooting)” for details of alarms and warnings.

5.2.3 Test operation

Before starting actual operation, perform test operation to make sure that the machine operates normally. Refer to section 5.2.1 for the power on and off methods of the servo amplifier.

Test operation of the servo motor alone in JOG operation of test operation mode	In this step, confirm that the servo amplifier and servo motor operate normally. With the servo motor disconnected from the machine, use the test operation mode and check whether the servo motor correctly rotates at the slowest speed.
Test operation of the servo motor alone by commands	In this step, confirm that the servo motor correctly rotates at the slowest speed under the commands from the controller. Make sure that the servo motor rotates in the following procedure. • Switch on EM2 (Forced stop 2) and SON (Servo-on). When the servo amplifier is put in a servo-on status, RD (Ready) switches on. • Switch on LSP (Forward rotation stroke end) and LSN (Reverse rotation stroke end). • When a pulse train is input from the controller, the servo motor starts rotating. Give a low speed command at first and check the rotation direction, etc. of the servo motor. If the machine does not operate in the intended direction, check the input signal.
Test operation with the servo motor and machine connected	In this step, connect the servo motor with the machine and confirm that the machine operates normally under the commands from the controller. Make sure that the servo motor rotates in the following procedure. • Switch on EM2 (Forced stop 2) and SON (Servo-on). When the servo amplifier is put in a servo-on status, RD (Ready) switches on. • Switch on LSP (Forward rotation stroke end) and LSN (Reverse rotation stroke end). • When a pulse train is input from the controller, the servo motor starts rotating. Give a low speed command at first and check the operation direction, etc. of the machine. If the machine does not operate in the intended direction, check the input signal. In the status display, check for any problems of the servo motor speed, command pulse frequency, load ratio, etc. • Then, check automatic operation with the program of the controller.

Tab. 5-2: *Test operation of the servo amplifier MR-J4-A at position control*

5.2.4 Parameter setting

WARNING:

Change settings and parameters only in small steps and make afterwards at first sure whether the desired effect occurs before doing any more changes. Excessive adjustment or change of parameter setting must not be made as it will make operation instable.

In the position control mode, the servo amplifier can be used by merely changing the basic setting parameters (PA□□) mainly.

As necessary, set other parameters:

- Gain/filter setting parameters (PB□□)
- Extension setting parameters (PC□□)
- I/O setting parameters (PD□□)
- Extension setting 2 parameters (PE□□)
- Extension setting 3 parameters (PF□□)
- Linear servo motor/DD motor setting parameters (PL□□)
- Option setting parameters (Po□□) ①
- Position control parameters (PT□□) ①

① Only MR-J4-A-RJ

5.2.5 Actual operation

Start actual operation after confirmation of normal operation by test operation and completion of the corresponding parameter settings. Perform a home position return as necessary.

NOTE

If there are any problems during startup, refer to the chapter “troubleshooting” in section 8.1 and in the instruction manual of the respective servo amplifier.

5.3 Startup of servo amplifier series MR-J4-B(-RJ) and MR-J4W-B

5.3.1 Power on and off the servo amplifier

Power on

When the main and control circuit power supplies are turned on, "b01" (for the first axis) appears on the servo amplifier display.

Parameter setting

Set the parameters according to the structure and specifications of the machine. Refer to chapter 7 and the instruction manual for details.

After setting the above parameters, turn power off as necessary. Then switch power on again to enable the parameter values.

Servo-on

Enable the servo-on with the following procedure.

① Switch on main circuit power supply and control circuit power supply.

② Transmit the servo-on command with the controller.

When the servo-on status is enabled, the servo amplifier is ready to operate and the servo motor is locked.

Home position return

Always perform home position return before starting positioning operation.

NOTES

When the absolute position detection system is used in a rotary servo motor, first power-on results in AL. 25 (Absolute position erased) and the servo system cannot be switched on. The alarm can be deactivated by then switching power off once and on again.

Also, if power is switched on at the servo motor speed of 3000 1/min or higher, position mismatch may occur due to external force or the like. Power must therefore be switched on when the servo motor is at a stop.

5.3.2 Stop of operation

If any of the following situations occurs, the servo amplifier suspends the running of the servo motor and brings it to a stop.

Refer to the instruction manual for the servo motor with an electromagnetic brake.

Triggered by	Operation/command	Stopping condition
Servo system controller	Servo-off command	The main circuit is shut off and the servo motor coasts.
	Ready-off command	The base circuit is shut off and the dynamic brake operates to bring the servo motor to a stop.
	Forced stop command	The servo motor decelerates to a stop with the command. AL. E7 (Controller forced stop warning) occurs.
Servo amplifier	Alarm occurrence	The servo motor decelerates to a stop with the command. With some alarms, however, the dynamic brake operates to bring the servo motor to a stop. (See note)
	EM2 (Forced stop 2) off	The servo motor decelerates to a stop with the command. AL. E6 (Servo forced stop warning) occurs. EM2 has the same function as EM1 in the torque control mode. Refer to the instruction manual for EM1.
	STO (STO1, STO2) off	The main circuit is shut off and the dynamic brake operates to bring the servo motor to a stop.

Tab. 5-3: *Stop of operation by servo system controller or servo amplifier*

NOTE

Refer to "MELSERVO J4 Servo Amplifier Instruction Manual (Troubleshooting)" for details of alarms and warnings.

5.3.3 Test operation

Before starting actual operation, perform test operation to make sure that the machine operates normally. Refer to section 5.3.1 for the power on and off methods of the servo amplifier.

NOTE If necessary, verify controller program by using motor-less operation. Refer to section 6.2.5 for the motor-less operation

Test operation of the servo motor alone in JOG operation of test operation mode	In this step, confirm that the servo amplifier and servo motor operate normally. With the servo motor disconnected from the machine, use the test operation mode and check whether the servo motor correctly rotates at the slowest speed.
Test operation of the servo motor alone by commands	In this step, confirm that the servo motor correctly rotates at the slowest speed under the commands from the controller. Give a low speed command at first and check the rotation direction, etc. of the servo motor. If the machine does not operate in the intended direction, check the input signal.
Test operation with the servo motor and machine connected	In this step, connect the servo motor with the machine and confirm that the machine operates normally under the commands from the controller. Give a low speed command at first and check the operation direction, etc. of the machine. If the machine does not operate in the intended direction, check the input signal. Check any problems with the servo motor speed, load ratio, and other status display items with MR Configurator2. Then, check automatic operation with the program of the controller.

Tab. 5-4: *Test operation of the servo amplifier MR-J4-B*

NOTE If there are any problems during startup, refer to the chapter “troubleshooting” in section 8.2, 8.3 and in the instruction manual of the respective servo amplifier.

5.4 Startup of servo amplifier series MR-J4-GF(-RJ) and MR-J4-TM

5.4.1 Power on and off the servo amplifier

Power on

When the main and control circuit power supplies are turned on, "b01" (MR-J4-GF(-RJ): for the first station/MR-J4-TM: for the first axis) appears on the servo amplifier display.

Parameter setting

Set the parameters according to the structure and specifications of the machine. Refer to chapter 7 and the instruction manual for details.

After setting the above parameters, turn power off as necessary. Then switch power on again to enable the parameter values.

Servo-on

Enable the servo-on with the following procedure.

① Switch on main circuit power supply and control circuit power supply.

② Transmit the servo-on command with the controller.

When the servo-on status is enabled, the servo amplifier is ready to operate and the servo motor is locked.

Home position return

Always perform home position return before starting positioning operation.

NOTES

When the absolute position detection system is used in a rotary servo motor, first power-on results in AL. 25 (Absolute position erased) and the servo system cannot be switched on. The alarm can be deactivated by then switching power off once and on again.

Also, if power is switched on at the servo motor speed of 3000 1/min or higher, position mismatch may occur due to external force or the like. Power must therefore be switched on when the servo motor is at a stop.

5.4.2 Stop of operation

If any of the following situations occurs, the servo amplifier suspends the running of the servo motor and brings it to a stop.

Refer to the instruction manual for the servo motor with an electromagnetic brake.

Triggered by	Operation/command	Stopping condition
Servo system controller	Servo-off command	The main circuit is shut off and the servo motor coasts.
	Ready-off command	The base circuit is shut off and the dynamic brake operates to bring the servo motor to a stop.
	Quick stop command	The servo motor decelerates to a stop with the command.
Servo amplifier	Alarm occurrence	The servo motor decelerates to a stop with the command. With some alarms, however, the dynamic brake operates to bring the servo motor to a stop. (See note)
	EM2 (Forced stop 2) off	The servo motor decelerates to a stop with the command. AL. E6 (Servo forced stop warning) occurs. EM2 has the same function as EM1 in the torque control mode. Refer to the instruction manual for EM1.
	STO (STO1, STO2) off	The main circuit is shut off and the dynamic brake operates to bring the servo motor to a stop.

Tab. 5-5: *Stop of operation by servo system controller or servo amplifier*

NOTE Refer to "MELSERVO J4 Servo Amplifier Instruction Manual (Troubleshooting)" for details of alarms and warnings.

5.4.3 CC-Link IE Field Network connection (only MR-J4-GF(-RJ))

Network disconnection procedure

Always make the servo-off status before turning off the system power and disconnecting the servo amplifier from the network. Otherwise, AL. 8D may occur. For the detection conditions of AL. 8D, refer to parameter PN06.

Network configuration change

If the network configuration in the same network as the servo amplifier is changed, such as adding or disconnecting a slave station, and adding a hub, all connected slave stations may be disconnected. Always make the servo-off status before changing the network configuration. Otherwise, AL. 8D may occur or the servo amplifier may not be reconnected.

Restrictions on CC-Link IE Field diagnosis

The following shows restrictions on CC-Link IE Field diagnosis.

Diagnosis item		Restrictions
Operation Test	Communication Test	Not compatible.
	IP Communication Test	Not compatible.
	Cable Test	Not compatible.
	Link Start/Stop	Not compatible. If the link start/stop function is used, AL. 8D may occur.
Information Confirmation/Set	Reserved Station Function Enable	When the servo amplifier is set as a reserved station, AL. 8D will occur.
	Enable/Disable Ignore Station Errors	Even if the servo amplifier is set as a temporary error invalid station, AL. 8D may occur when the servo amplifier is disconnected from the network. When setting the servo amplifier as a temporary error invalid station, make the servo-off status.
Selected Station Operation	Remote Operation	Not compatible.

Tab. 5-6: *Restrictions on CC-Link IE Field diagnosis*

Model code

The following shows the vendor code and model code.

Vendor code	Model code	Model
0002	1002	MR-J4-GF

Tab. 5-7: *Model code*

5.4.4 Test operation

Before starting actual operation, perform test operation to make sure that the machine operates normally. Refer to section 5.4.1 for the power on and off methods of the servo amplifier.

NOTES

If necessary, verify controller program by using motor-less operation. Refer to section 6.2.5 for the motor-less operation

Only MR-J4-TM:
When EtherNet/IP is used and the test operation mode is set, the value set with the axis selection rotary switch (SW2/SW3) is displayed in the digit of the axis number.

Test operation of the servo motor alone in JOG operation of test operation mode	In this step, confirm that the servo amplifier and servo motor operate normally. With the servo motor disconnected from the machine, use the test operation mode and check whether the servo motor rotates correctly.
Test operation of the servo motor alone by commands	In this step, confirm that the servo motor correctly rotates at the slowest speed under the commands from the controller. Give a low speed command at first and check the rotation direction, etc. of the servo motor. If the machine does not operate in the intended direction, check the input signal.
Test operation with the servo motor and machine connected	In this step, connect the servo motor with the machine and confirm that the machine operates normally under the commands from the controller. Give a low speed command at first and check the operation direction, etc. of the machine. If the machine does not operate in the intended direction, check the input signal. Check any problems with the servo motor speed, load ratio, and other status display items with MR Configurator2. Then, check automatic operation with the program of the controller.

Tab. 5-8: *Test operation of the servo amplifier MR-J4-GF and MR-J4-TM*

NOTE

If there are any problems during startup, refer to the chapter “troubleshooting” in section 8.2, 8.4 and in the instruction manual of the respective servo amplifier.

6 Operation and Settings

6.1 Display and operation section of MR-J4-A series

The MR-J4-□A(-RJ) servo amplifier has the display section (5-digit, 7-segment LED) and operation section (4 push buttons) for servo amplifier status display, alarm display, parameter setting, etc. Also, press the "MODE" and "SET" buttons at the same time for 3 s or more to switch to the one-touch tuning mode.

6.1.1 Overview

The operation section and display data are described below.

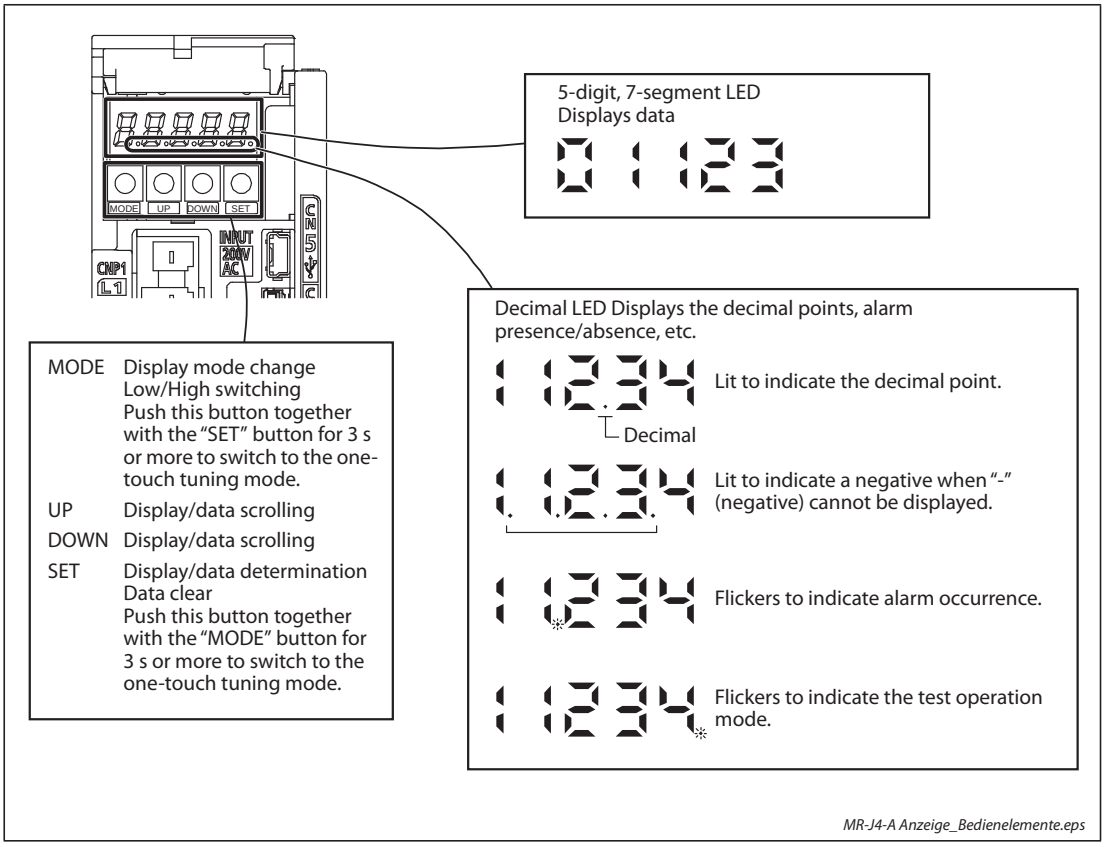

Fig. 6-1: *Display and push buttons of MR-J4-A*

6.1.2 Display flowchart MR-J4-A

Press the "MODE" button once to shift to the next display mode. Refer to section 6.1.3 and later for the description of the corresponding display mode.

To refer to and set the gain/filter parameters, extension setting parameters and I/O setting parameters, enable them with parameter PA19 (Parameter writing inhibit).

Display mode transition	Initial screen	Function	Refer to
Status display	C	Servo status display. C appears at power-on. ①	Section 6.1.3
One-touch tuning	AUTo	One-touch tuning Select this when performing the one-touch tuning.	Instruction manual
Diagnosis	rd-oF	Sequence display, external signal display, output signal (DO) forced output, test operation, software version display, VC automatic offset, servo motor series ID display, servo motor type ID display, servo motor encoder ID display, drive recorder enabled/disabled display.	Instruction manual
Alarms	AL---	Current alarm display, alarm history display, parameter error number display.	Section 6.1.8
Basic setting parameters	P A01	Display and setting of basic setting parameters.	Section 6.1.9
Gain/filter parameters	P b01	Display and setting of gain/filter parameters.	
Extension setting parameters	P C01	Display and setting of extension setting parameters.	
I/O setting parameters	P d01	Display and setting of I/O setting parameters.	
Extension setting 2 parameters	P E01	Display and setting of extension setting 2 parameters.	
Extension setting 3 parameters	P F01	Display and setting of extension setting 3 parameters.	
Linear/DD motor setting parameters	P L01	Display and setting of linear/DD motor setting parameters.	

Button MODE

Tab. 6-1: *MR-J4-A – Display sequence via activation of the MODE button*

① When the axis name is set to the servo amplifier using MR Configurator2, the axis name is displayed and the servo status is then displayed.

6.1.3 Status display mode MR-J4-A

The servo status during operation is shown on the 5-digit, 7-segment LED display. Press the "UP" or "DOWN" button to change display data as desired. When the required data is selected, the corresponding symbol is displayed. Press the "SET" button to display that data. At only power-on, however, data appears after the symbol of the status display selected in Parameter PC36 (initial setting: C (Cumulative feedback pulses)) has been shown for 2 s.

Display transition

After selecting the status display mode with the "MODE" button, pressing the "UP" or "DOWN" button changes the display as shown below.

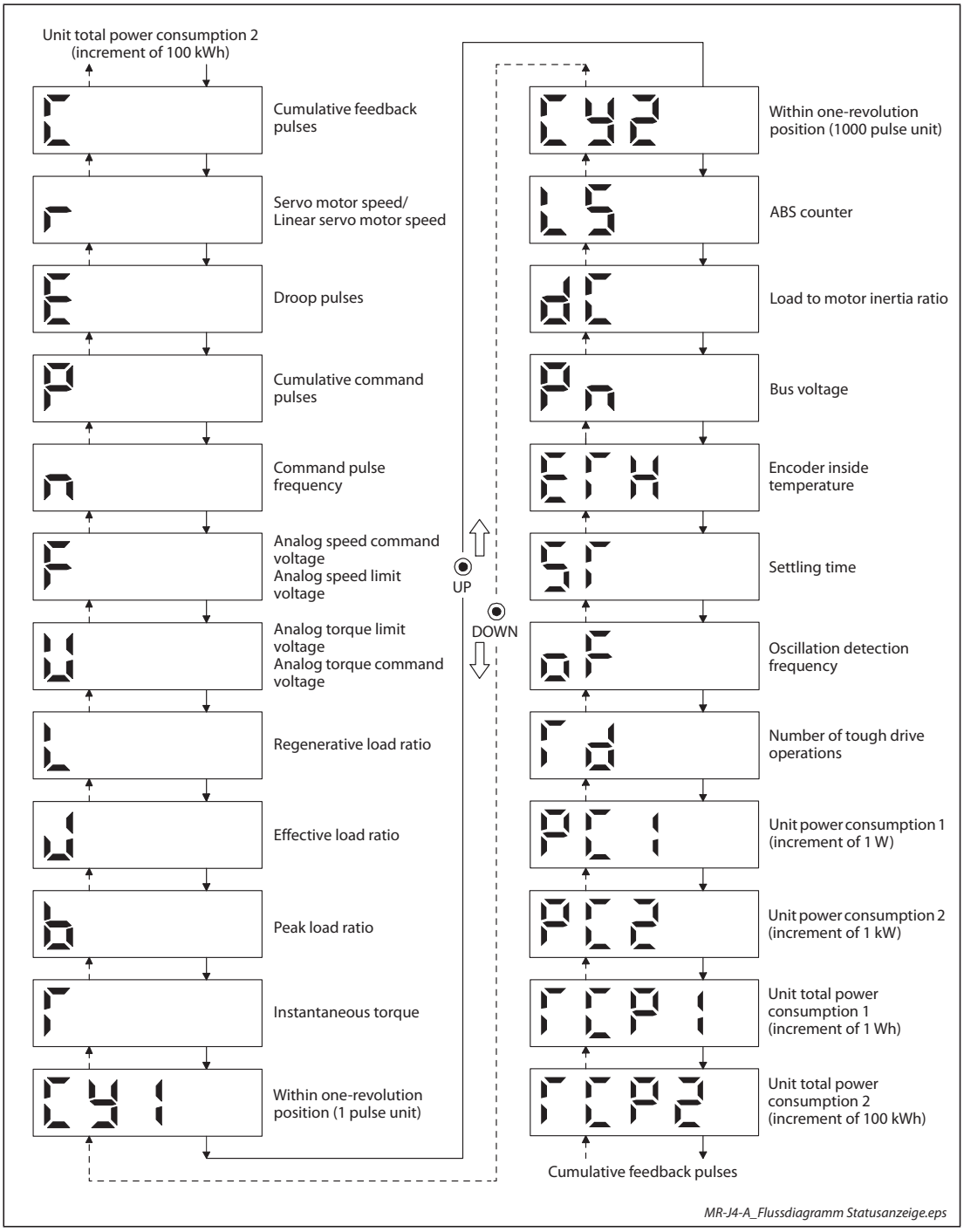

Fig. 6-2: *MR-J4-A – Display transition of status display (standard control mode)*

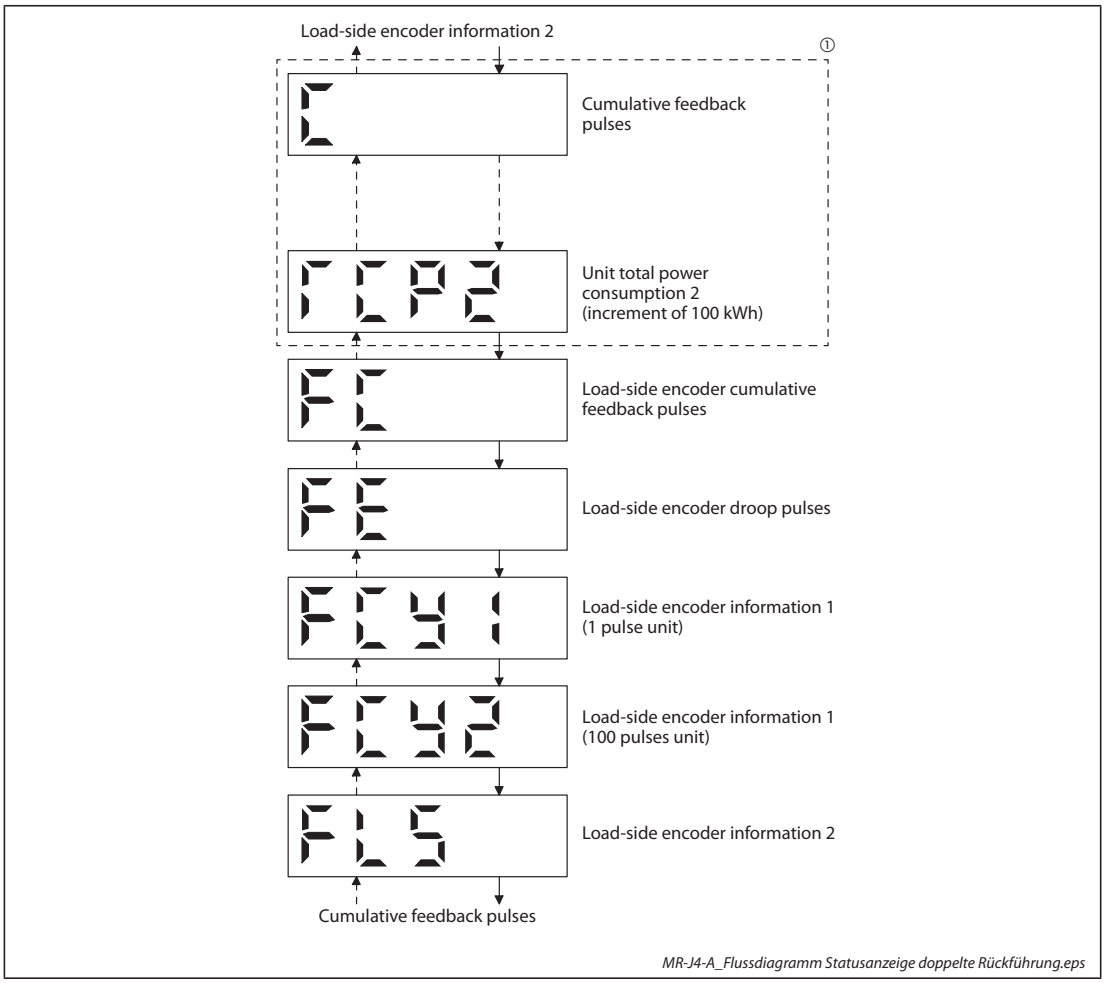

Fig. 6-3: *MR-J4-A – Display transition of status display (fully closed loop control mode)*

① The displays in the frames are the standard control modes in one cycle with some displays omitted.

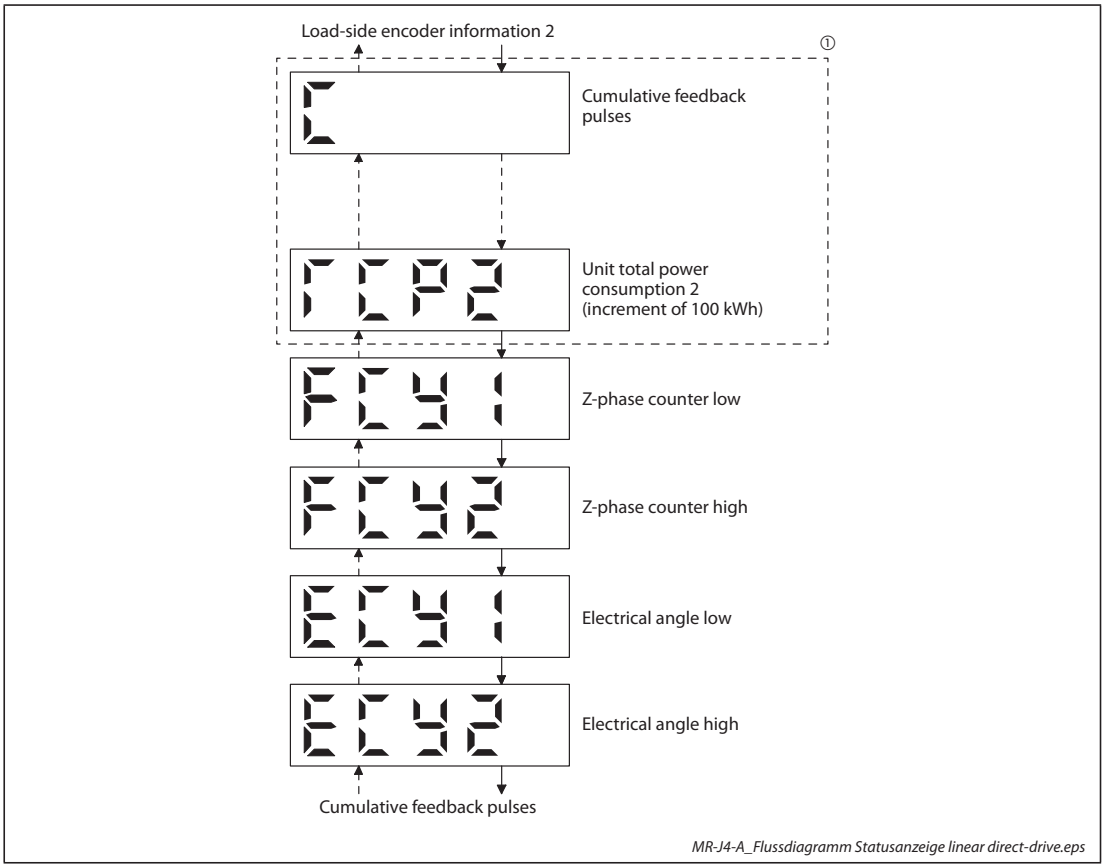

Fig. 6-4: *MR-J4-A – Display transition of status display (Linear servo motor control mode/Direct drive motor control mode)*

① The displays in the frames are the standard control modes in one cycle with some displays omitted.

6.1.4 Display flowchart MR-J4-A-RJ

Press the "MODE" button once to shift to the next display mode. Refer to section 6.1.5 and later for the description of the corresponding display mode.

Display mode transition	Initial screen	Function	Refer to
Status display	PoS	Servo status display. For the point table and program PoS is displayed at power-on. For indexer, C will be displayed. ①	Section 6.1.5
One-touch tuning	AUTo	One-touch tuning Select this when performing the one-touch tuning.	Instruction manual
Diagnosis	rd-oF	Sequence display, drive recorder enabled/disabled display, external I/O signal display, output signal (DO) forced output, test operation, software version display, VC automatic offset, servo motor series ID display, servo motor type ID display, servo motor encoder ID display, teaching function	Instruction manual
Alarms	AL---	Current alarm display, alarm history display, parameter error number display.	Section 6.1.8
Point table setting	PoD01	Display and setting of point table data. The screen is displayed only in the point table method, and is not displayed in other control mode.	Instruction manual
Basic setting parameters	P A01	Display and setting of basic setting parameters.	Section 6.1.9
Gain/filter parameters	P b01	Display and setting of gain/filter parameters.	
Extension setting parameters	P C01	Display and setting of extension setting parameters.	
I/O setting parameters	P d01	Display and setting of I/O setting parameters.	
Extension setting 2 parameters	P E01	Display and setting of extension setting 2 parameters.	
Extension setting 3 parameters	P F01	Display and setting of extension setting 3 parameters.	
Linear/DD motor setting parameters	P L01	Display and setting of linear/DD motor setting parameters.	

Button MODE

From/to next table

Tab. 6-2: *MR-J4-A-RJ – Display sequence via activation of the MODE button (1)*

Display mode transition	Initial screen	Function	Refer to
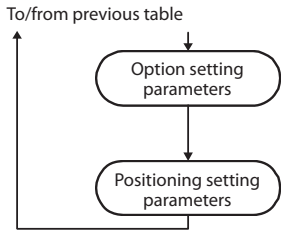		Display and setting of option setting parameters.	Section 6.1.9
		Display and setting of positioning control parameters.	

Tab. 6-2: *MR-J4-A-RJ – Display sequence via activation of the MODE button (2)*

① When the axis name is set to the servo amplifier using MR Configurator2, the axis name is displayed and the servo status is then displayed.

6.1.5 Status display mode MR-J4-A-RJ

The servo status during operation is shown on the 5-digit, 7-segment LED display. Press the "UP" or "DOWN" button to change display data as desired. When the required data is selected, the corresponding symbol is displayed. Press the "SET" button to display that data. At only power-on, however, data appears after the symbol of the status display selected in Parameter PC36 has been shown for 2 s.

Display transition

After selecting the status display mode with the "MODE" button, pressing the "UP" or "DOWN" button changes the display as shown below.

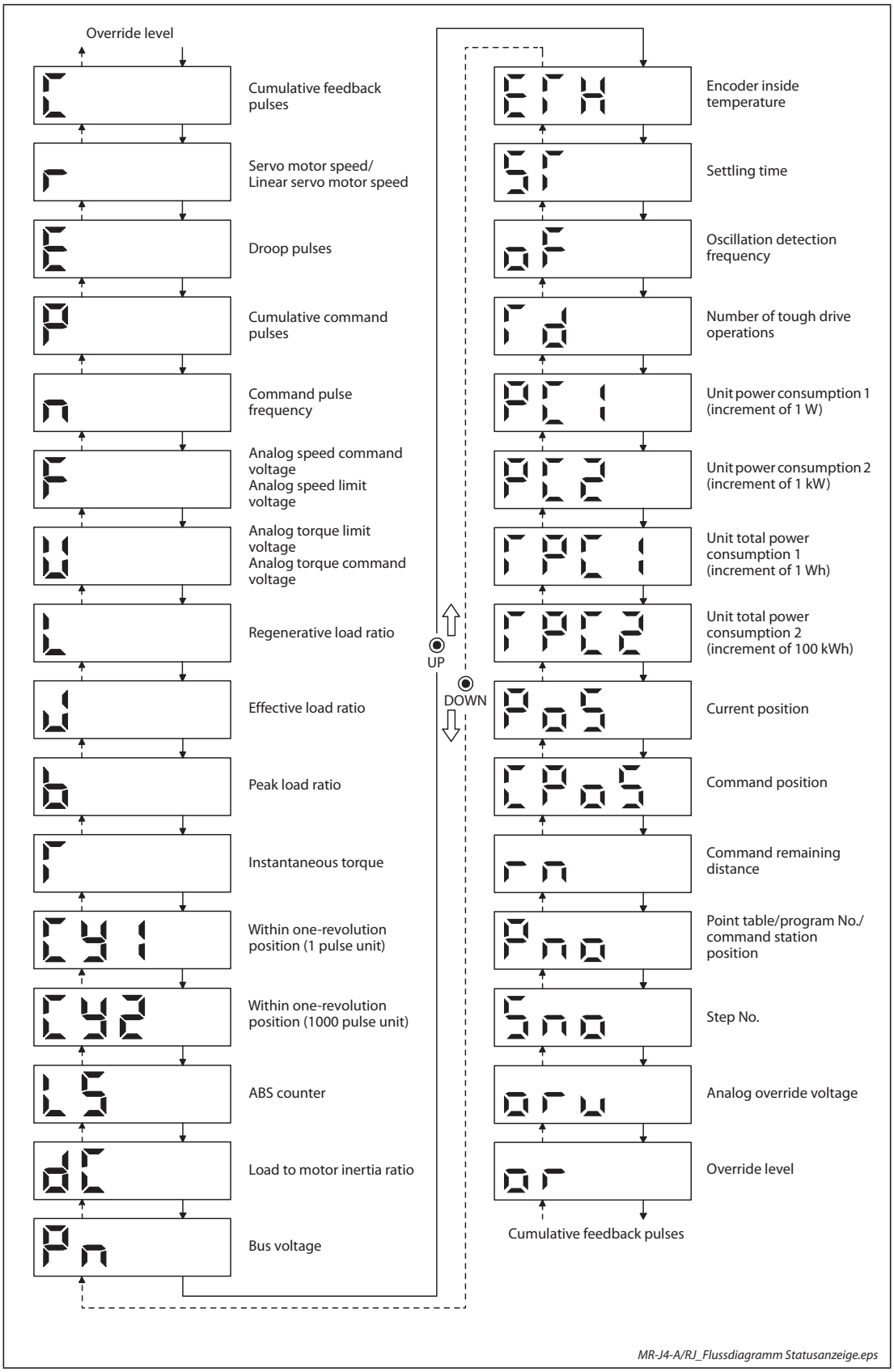

Fig. 6-5: *MR-J4-A-RJ – Display transition of status display (Positioning mode/DD motor control mode)*

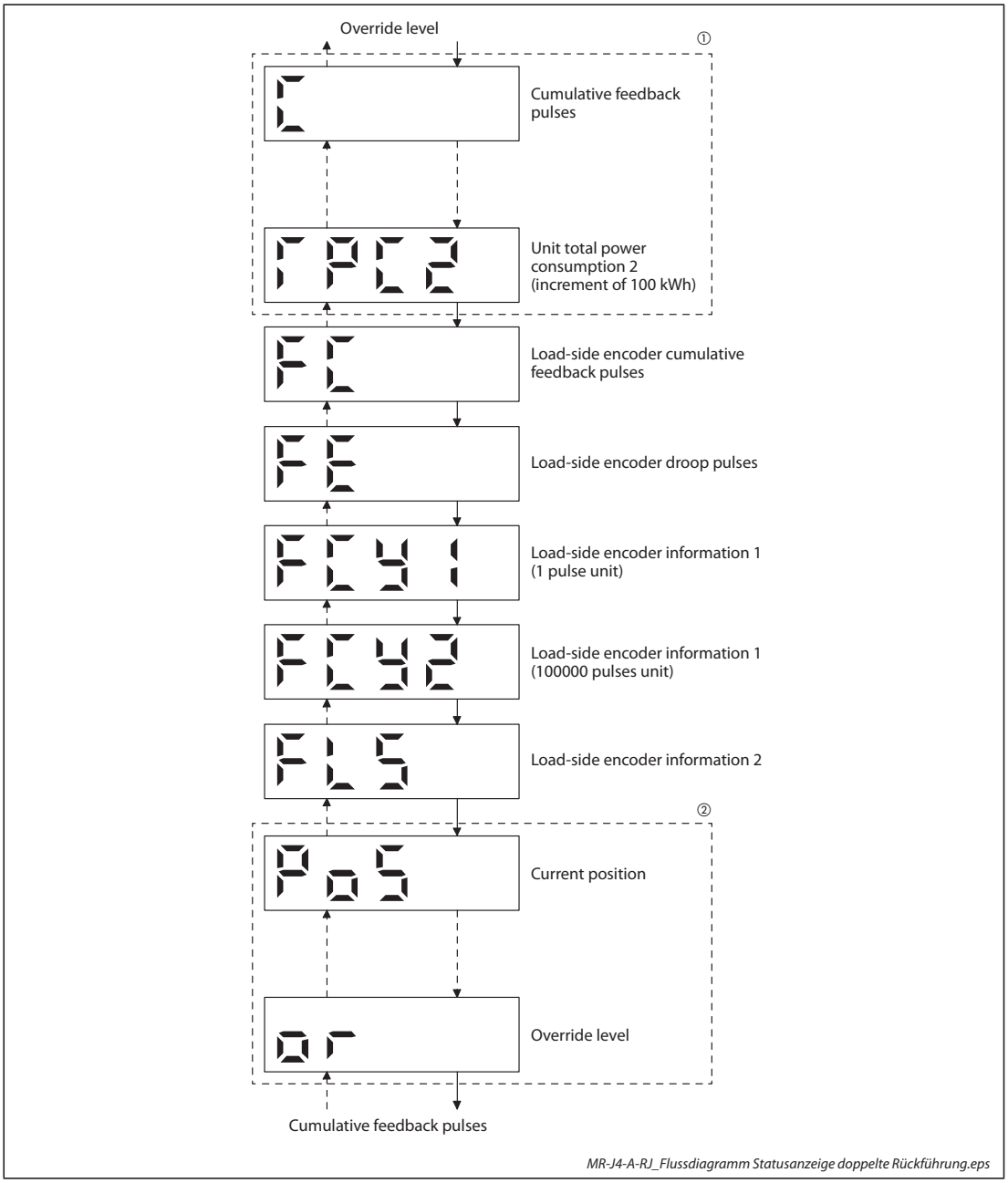

Fig. 6-6: *MR-J4-A-RJ – Display transition of status display (fully closed loop control mode)*

① The displays in the frames are from the cumulative feedback pulses of positioning mode to unit total power consumption 2 (increment of 100 kWh) with some displays omitted.

② The displays in the frames are from the current position of positioning mode to override level with some displays omitted.

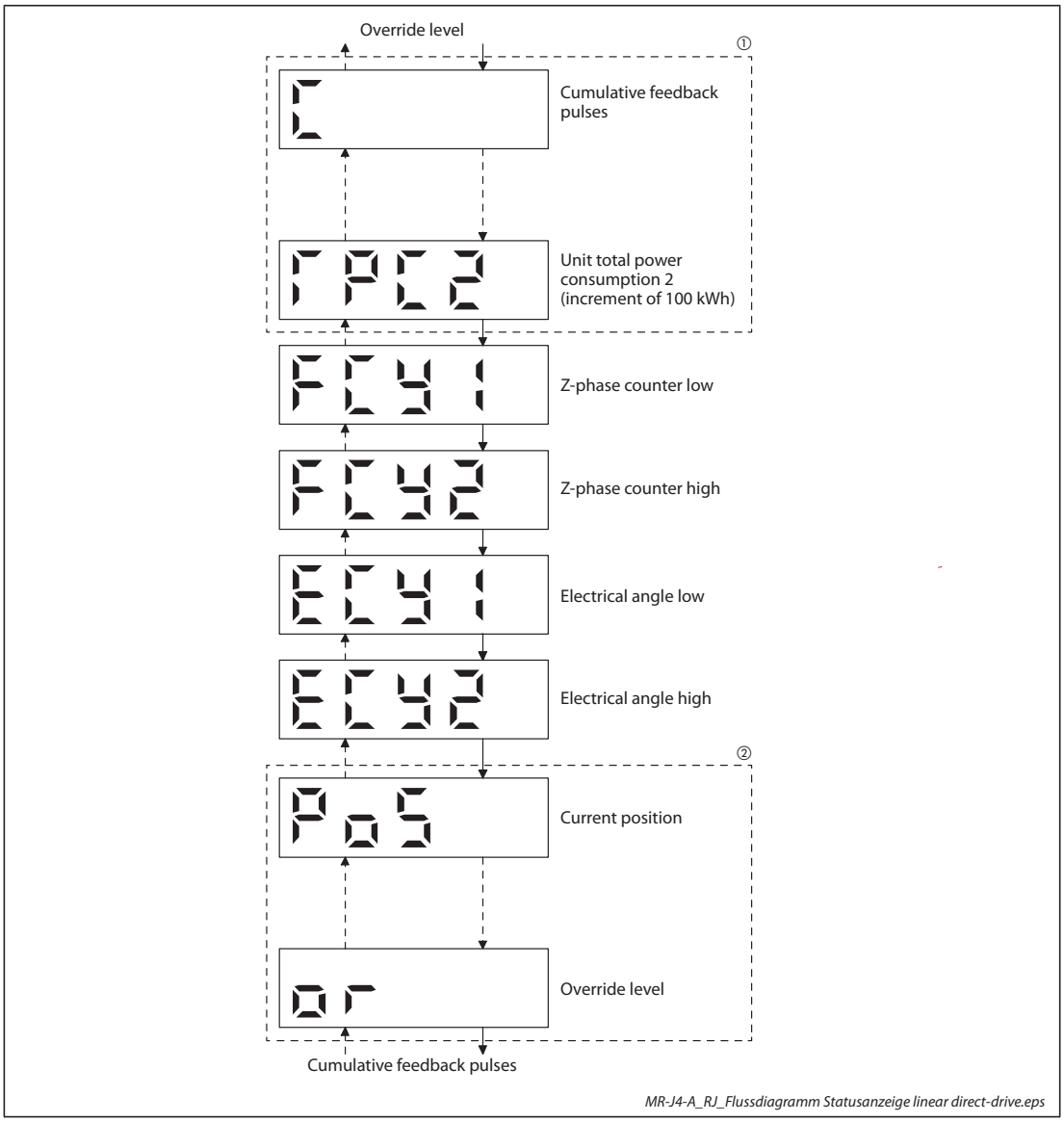

Fig. 6-7: *MR-J4-A-RJ – Display transition of status display (Linear servo motor control mode)*

① The displays in the frames are from the cumulative feedback pulses of positioning mode to unit total power consumption 2 (increment of 100 kWh) with some displays omitted.

② The displays in the frames are from the current position of positioning mode to override level with some displays omitted.

6.1.6 Display examples

Item	State	Displayed data Servo amplifier display
Servo motor speed	Forward rotation at 2500 min^{-1}	2500
	Reverse rotation at 3000 min^{-1}	-3000 Reverse rotation is indicated by "–".
Load to motor inertia ratio	7.00 times	7.00
ABS counter	11252 revolutions	11252
	-12566 revolutions	12566 Lit

Tab. 6-3: *Display examples of status display MR-J4-A(-RJ)*

6.1.7 Changing the status display screen

The status display item of the servo amplifier display shown at power-on can be changed by changing Parameter PC36 settings. The item displayed in the initial status changes with the control mode as follows.

Control mode	Status display
Position	Cumulative feedback pulses
Position/speed	Cumulative feedback pulses/servo motor speed
Speed	Servo motor speed
Speed/torque	Servo motor speed/analog torque command voltage
Torque	Analog torque command voltage
Torque/position	Analog torque command voltage/cumulative feedback pulses
Positioning (point table method/program method) ①	Current position
Positioning (indexer method) ①	Cumulative feedback pulses

Tab. 6-4: *Display of initial status MR-J4-A(-RJ)*

① Only MR-J4-A-RJ

6.1.8 Alarm mode

The current alarm, past alarm history and parameter error are displayed. The lower 2 digits on the display indicate the alarm number that has occurred or the parameter number in error.

Name	Display ①	Description
Current alarm	AL. ---	Indicates no occurrence of an alarm.
	AL. 33	Indicates the occurrence of AL. 33.1 (Main circuit voltage error). Flickers at alarm occurrence.
Alarm history	A0 50. 1	Indicates that the last alarm is AL. 50.1 (Thermal overload error 1 during operation).
	A1 33. 1	Indicates the second last alarm is AL. 33.1 (Main circuit voltage error).
	A2 10. 1	Indicates the third last alarm is AL. 10.1 (Voltage drop in the control circuit power).
	⋮	⋮
	A9 ---	Indicates that there is no tenth alarm in the past.
	AA ---	Indicates that there is no eleventh alarm in the past.
	Ab ---	Indicates that there is no twelfth alarm in the past.
	⋮	⋮
	AF ---	Indicates that there is no sixteenth alarm in the past.
Parameter error No. ②	E --	This indicates no occurrence of AL. 37 (Parameter error).
	E A12	The data content error of Parameter PA12 (Reverse rotation torque limit).
Point table error No. ③	E.002d	The value of the point table is over the setting range. The error point table No. (intermediate digit "2") and item (lower digit "d") are displayed. The following shows the items. P: position data, d: motor speed, A: acceleration time constant, b: deceleration time constant, n: dwell, H: sub function, M: M code

Tab. 6-5: *Alarm examples*

① If a parameter error and point table error occur simultaneously, the display shows the parameter error (only MR-J4-A-RJ).

② The display shows only when the current alarm is AL. 37 (Parameter error).

③ Only MR-J4-A-RJ

NOTES

Any mode screen displays the current alarm.

Even during alarm occurrence, the other screen can be viewed by pressing the button in the operation area. At this time, the decimal point in the fourth digit remains flickering.

For any alarm, remove its cause and clear it in any of the following methods.
- Switch power off, then on.
- Push the "SET" button on the current alarm screen.
- Turn on RES (Reset).

Use Parameter PC18 to clear the alarm history.

Push "UP" or "DOWN" to move to the next history.

6.1.9 Parameter mode

Parameter mode transition

After selecting the corresponding parameter mode with the "MODE" button, pushing the "UP" or "DOWN" button changes the display as shown below.

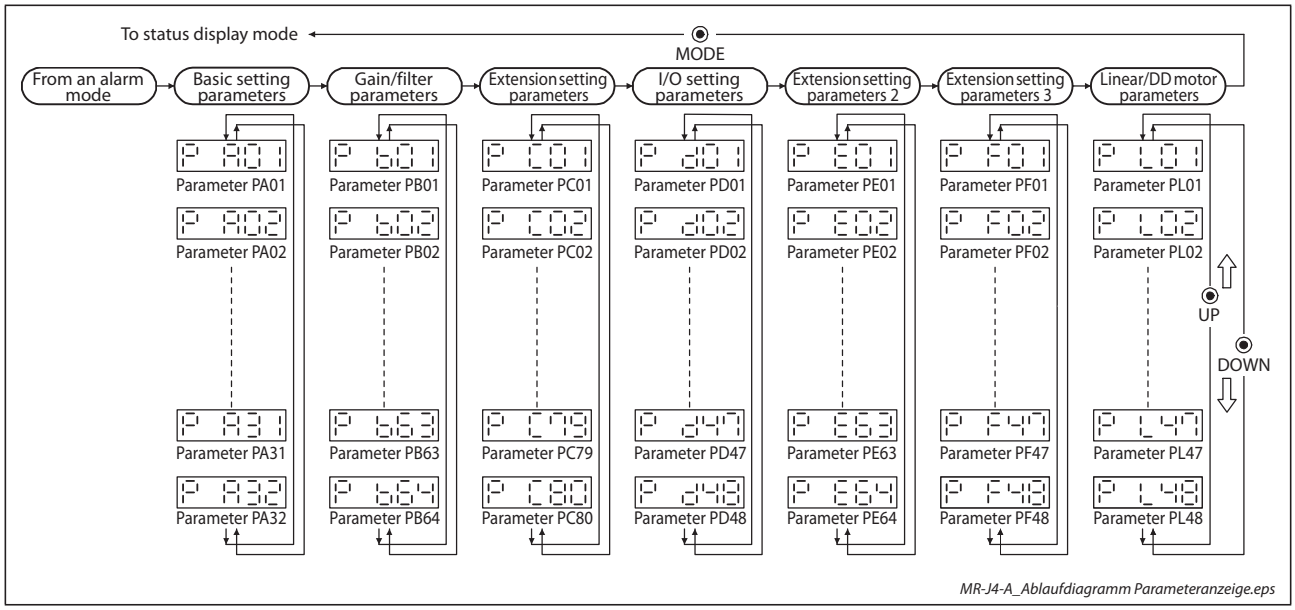

Fig. 6-8: *MR-J4-A – Parameter display selection*

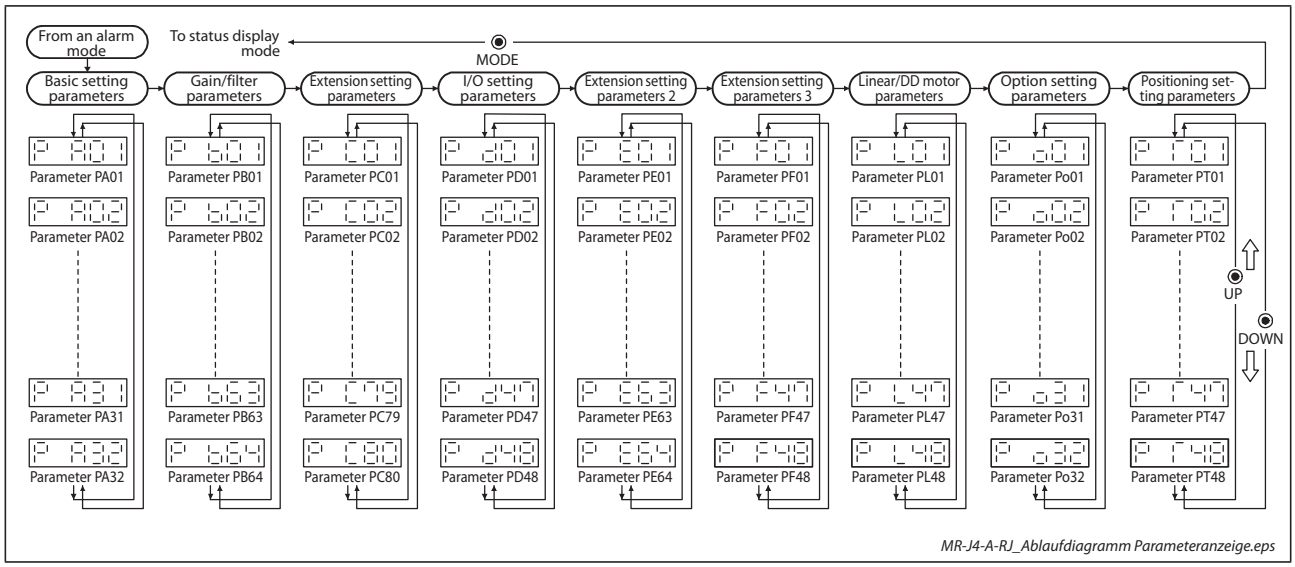

Fig. 6-9: *MR-J4-A-RJ – Parameter display selection*

Operation example

- Parameters of 5 or less digits

  The following example shows the operation procedure performed after power-on to change the control mode to the speed control mode with Parameter PA01 (Operation mode). Press "MODE" to switch to the basic setting parameter screen.

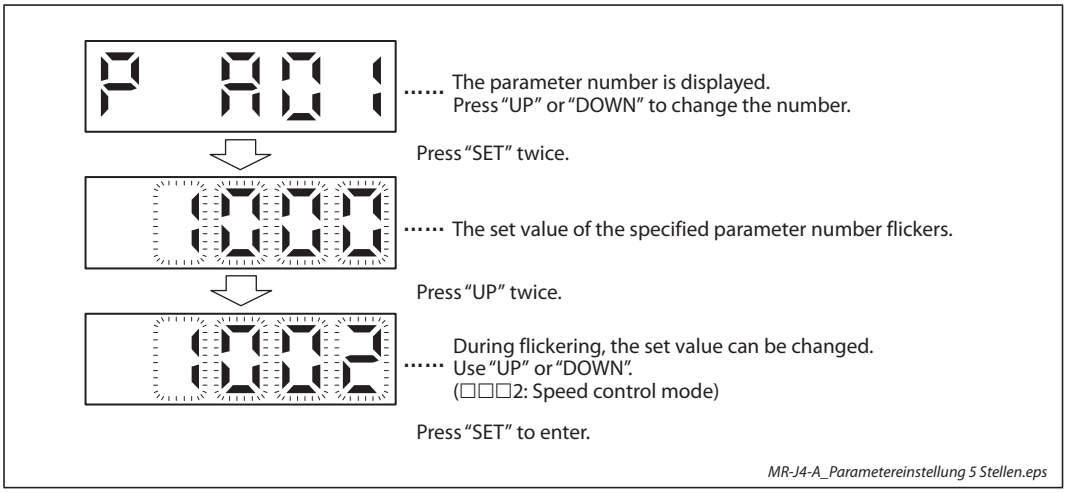

Fig. 6-10: *Changing PA01 from "Position control mode" to "Speed control mode"*

To shift to the next parameter, press the "UP" or "DOWN" button.

When changing the Parameter PA01 setting, change its set value, then switch power off once and switch it on again to enable the new value.

- Parameters of 6 or more digits

The following example gives the operation procedure to change the electronic gear numerator to "123456" with Parameter PA06 (Electronic gear numerator).

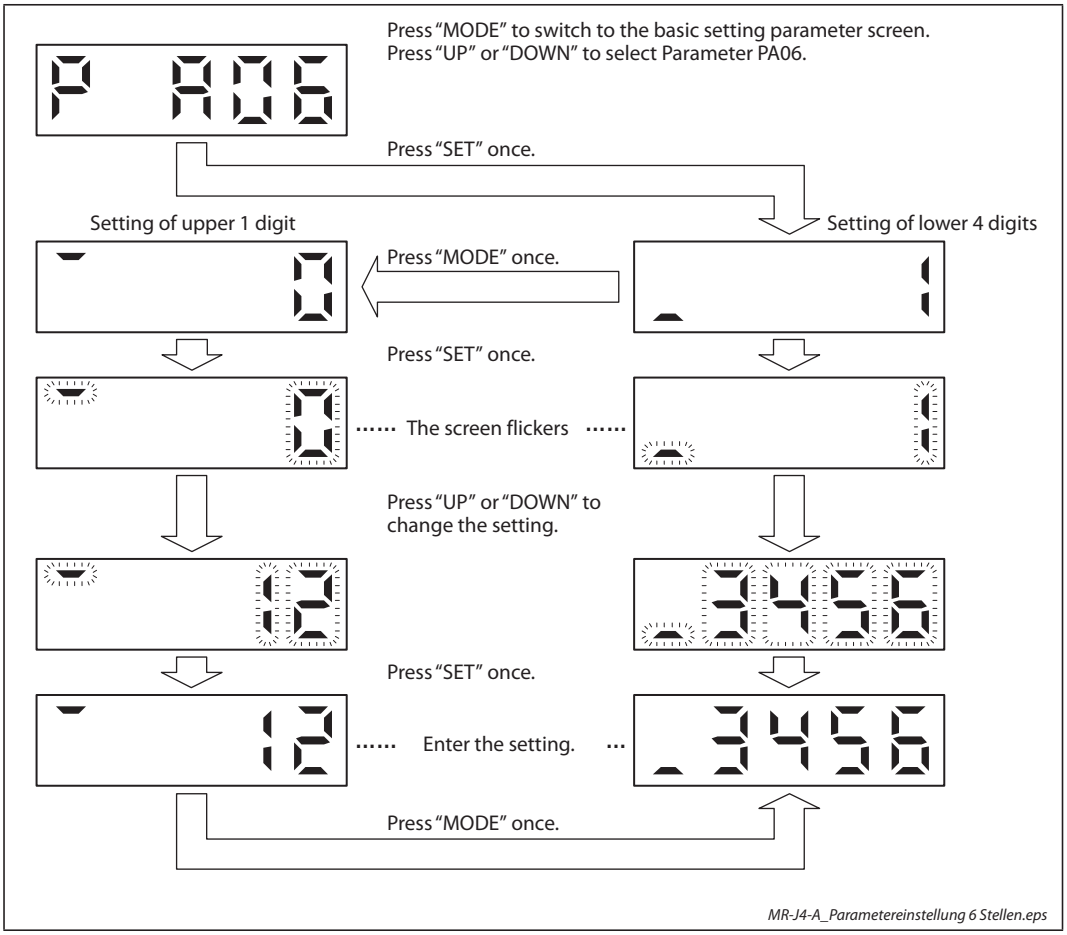

Fig. 6-11: *Changing the setting of PA06 to "123456"*

6.1.10 Test operation mode

WARNING:

- ***The test operation mode is designed for checking servo operation. Do not use it for actual operation.***
- ***If the servo motor operates unexpectedly, use EM2 (Forced stop 2) to stop it.***

NOTES

The test operation mode cannot be used in the absolute position detection system by DIO.

MR Configurator2 is required to perform positioning operation.

Test operation cannot be performed if SON (Servo-on) is not turned off.

Mode switching

Call the display screen shown after power-on. Select JOG operation or motor-less operation in the following procedure. Using the "MODE" button, show the diagnostic screen.

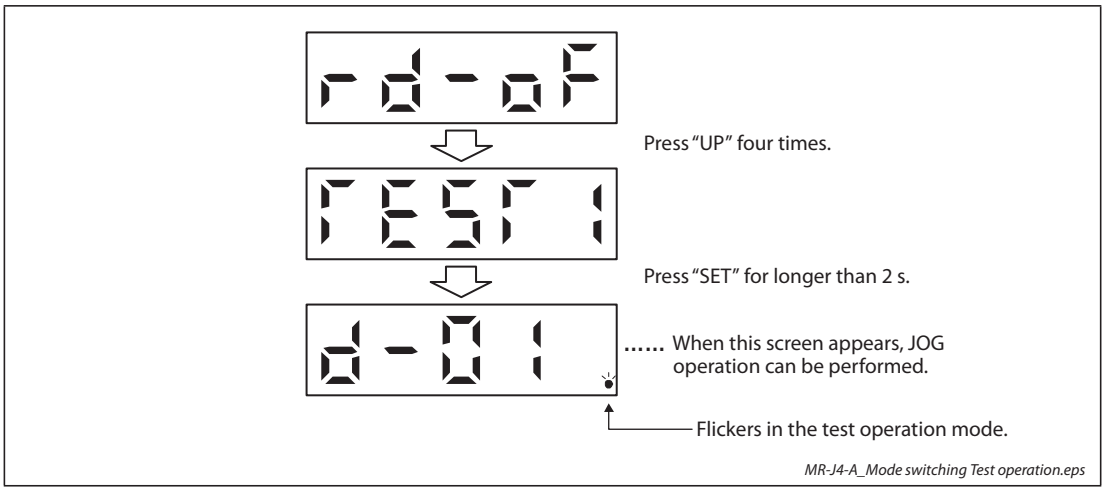

Fig. 6-12: *Mode switching for JOG operation or motor-less operation*

JOG operation

NOTE When performing JOG operation, turn on EM2, LSP and LSN. LSP and LSN can be set to automatic on by setting Parameter PD01 to "□C□□".

JOG operation can be performed when there is no command from the controller.

- Operation

The servo motor rotates while holding down the "UP" or the "DOWN" button. The servo motor stops rotating by releasing the button. The operation condition can be changed using MR Configurator2. The initial operation condition and setting range for operation are listed below.

Item	Initial setting	Setting range
Speed [1/min]	200	0 to instantaneous permissible speed
Acceleration/deceleration time constant [ms]	1000	0 to 50000

Tab. 6-6: *Initial settings for operation*

The following table shows how to use the buttons.

Button	Description
"UP"	Press to start CCW rotation. Release to stop.
"DOWN"	Press to start CW rotation. Release to stop.

Tab. 6-7: *Use of the buttons*

If the USB cable is disconnected during JOG operation using the MR Configurator2, the servo motor decelerates to a stop.

- Status display

Press the "MODE" button in the JOG operation-ready status to call the status display screen. When the JOG operation is performed using the "UP" or "DOWN" button, the servo status is displayed during the JOG operation. Every time the "MODE" button is pushed, the next status display screen appears. When one cycle of the screen display is complete, it returns to the jog operation-ready status screen. Refer to section 6.1.3 for details of status display. Note that the status display screen cannot be changed by the "UP" or "DOWN" button during the JOG operation.

- Termination of JOG operation

To end the JOG operation, shut the power off once, or press the "MODE" button to switch to the next screen, and then hold down the "SET" button for 2 s or longer.

Positioning operation

NOTES

MR Configurator2 is required to perform positioning operation.

Turn on EM2 (forced stop 2) when performing positioning operation.

For positioning operation of the servo amplifier MR-J4-A-RJ in positioning mode with the point table method, program method, indexer method refer to the instruction manual.

Positioning operation can be performed when there is no command from a controller.

- Operation

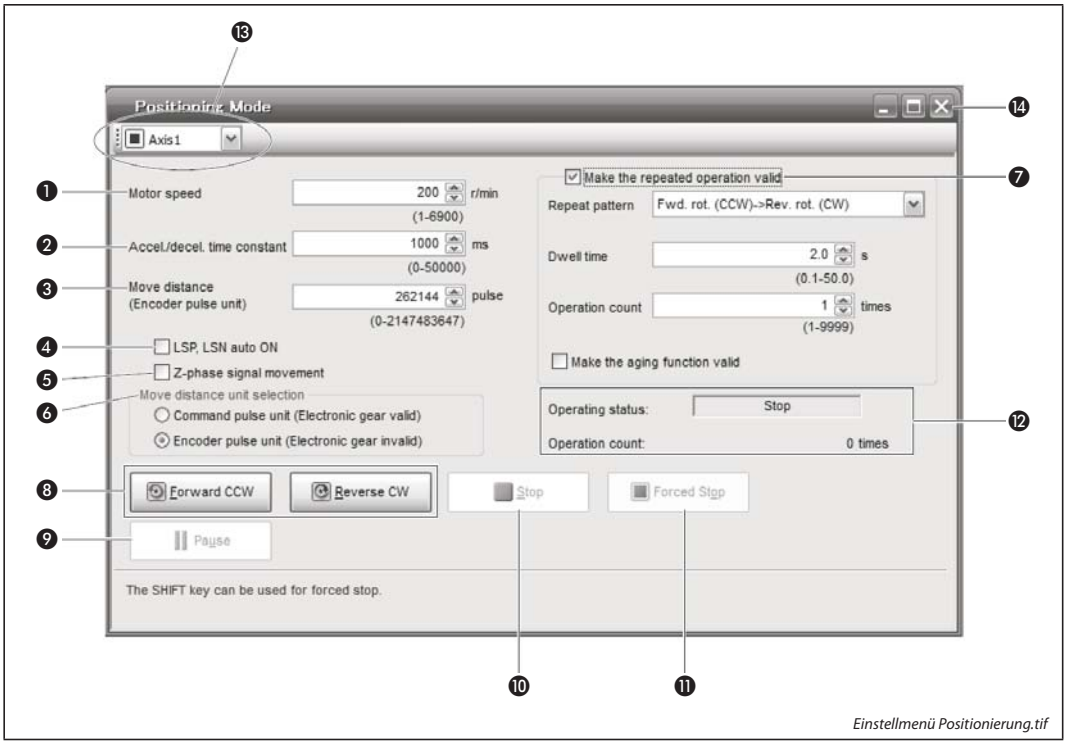

Fig. 6-13: *Setting menu of setup software for positioning*

❶ Motor speed [1/min]
Enter the servo motor speed into the "Motor speed" input field.

❷ Acceleration/deceleration time constant [ms]
Enter the acceleration/deceleration time constant into the "Accel/decel time" input field.

❸ Travel distance [pulse]
Enter the travel distance into the "Travel distance" input field.

❹ LSP/LSN are automatically turned on
When setting the external stroke signal to automatic on, click the check box to enable it. When it is not selected, turn on LSP and LSN externally.

❺ Move till Z-phase signal
Travel is made until the travel distance is reached and the first Z-phase signal in the travelling direction turns on.

❻ Travel distance unit selection
Select with the option buttons whether the travel distance set in ❸ is in the command pulse unit or in the encoder pulse unit.
When the command input pulse unit is selected, the value, which is the set travel distance multiplied by the electronic gear, will be the command value. When the encoder pulse unit is selected, the travel distance is not multiplied by the electronic gear.

❼ Enable repeat operation
To perform repeat operation, click the check. The initial setting and setting range for the repeat operation are listed in the following table.

Item	Initial setting	Setting range
Repeat pattern	Fwd. rot. (CCW) to rev. rot. (CW)	Fwd. rot. (CCW) to rev. rot. (CW) Fwd. rot. (CCW) to fwd. rot. (CCW) Rev. rot. (CW) to fwd. rot. (CCW) Rev. rot. (CW) to rev. rot. (CW)
Dwell time [s]	2.0	0.1 to 50.0
Number of operations [times]	1	1 to 9999

Tab. 6-8:*Initial settings for repeat operation*

To perform continuous operation with the repeat pattern and dwell time settings, which are set by referring to the above table, click the check box of "Make the aging function enabled".

❽ Forward/reverse the servo motor
Click the "Forward" button to rotate the servo motor in the forward rotation direction.
Click the "Reverse" button to rotate the servo motor in the reverse rotation direction.

❾ Pause the servo motor
Click the "Pause" button during servo motor rotation to temporarily stop the servo motor. This button is enabled during servo motor rotation.

❿ Stop the servo motor
Click the "Stop" button during servo motor rotation to stop the servo motor.

⓫ Forced stop
Click the "Forced stop" button during servo motor rotation to make a sudden stop. This button is enabled during servo motor rotation.

⓬ Operation status
The operation status during the repeat operation, and the number of operations are displayed.

⓭ Axis No.
Axis No. in operation is displayed.

⓮ Termination of positioning operation window
Click the close button to cancel the positioning operation mode and close the window.

● Status display

The status display can be monitored during positioning operation.

Motor-less operation

Without connecting the servo motor, output signals or status display can be provided in response to the input device as if the servo motor is actually running. This operation can be used to check the sequence of a controller or the like.

- Start of motor-less operation
  After setting "□□□1" in Parameter PC60, cycle the power. After that, perform external operation as in ordinary operation.
- Termination of motor-less operation
  To terminate the motor-less operation, set Parameter PC60 to "□□□0" and then turn the power off.

Program operation

Positioning operation can be performed in two or more operation patterns combined, without using a controller. Use this operation with the forced stop reset. This operation may be used independently of whether servo-on or servo-off and whether a controller is connected or not.

Exercise control on the program operation screen of MR Configurator2. For full information, refer to the MR Configurator2 Installation Guide

Operation	Screen control
Start	Click the "Operation start" button.
Stop	Click the "Stop" button.
Forced stop	Click the "Forced stop" button.

Tab. 6-9:
Buttons for program operation

Output signal (DO) forced output

Output signals can be switched on/off forcibly independently of the servo status. This function is used for output signal wiring check, etc. Exercise control on the DO forced output screen of MR Configurator2.

6.2 Display and operation section of MR-J4-B(-RJ) series

On the servo amplifier display (three-digit, seven-segment LED), check the status of communication with the servo system controller at power-on, and the axis number, and diagnose a malfunction at occurrence of an alarm.

Switching to the test operation mode, deactivating control axes, and setting control axis No. are enabled with switches on the servo amplifier.

6.2.1 Overview

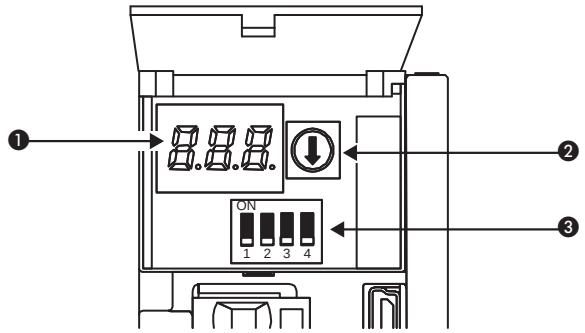

Fig. 6-14: *Display and controls of MR-J4-B(-RJ)*

No.	Name	Description	Refer to
❶	Display	The 3-digit, seven-segment LED shows the servo status and alarm number	section 6.2.2 section 6.2.3
❷	 SW1: Rotary axis setting switch	Used to set the axis number of the servo amplifier. (Axis No. 1–16)	page 4-33
❸	SW2: Control axis setting switch 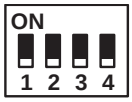	SW2-1 is used to perform the test operation mode. SW2-2 is used for disabling the control axis. SW2-3 and 2-4 are auxiliary switches for setting the axis No. 17–64	page 6-26 page 4-33

Tab. 6-10: *Controls and function*

Disabling control axis switch (SW2-2)

Turning "ON (up)" the disabling control axis switch disables the corresponding servo motor. The servo motor will be disabled-axis status and will not be recognized by the controller.

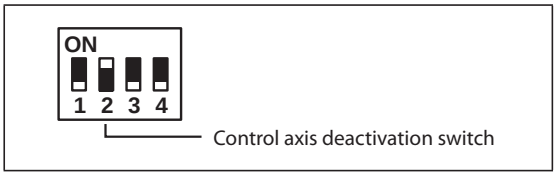

Fig. 6-15:
SW2-2 is switched ON

6.2.2 Scrolling display

Normal display

When there is no alarm, the axis No. and blank are displayed in rotation.

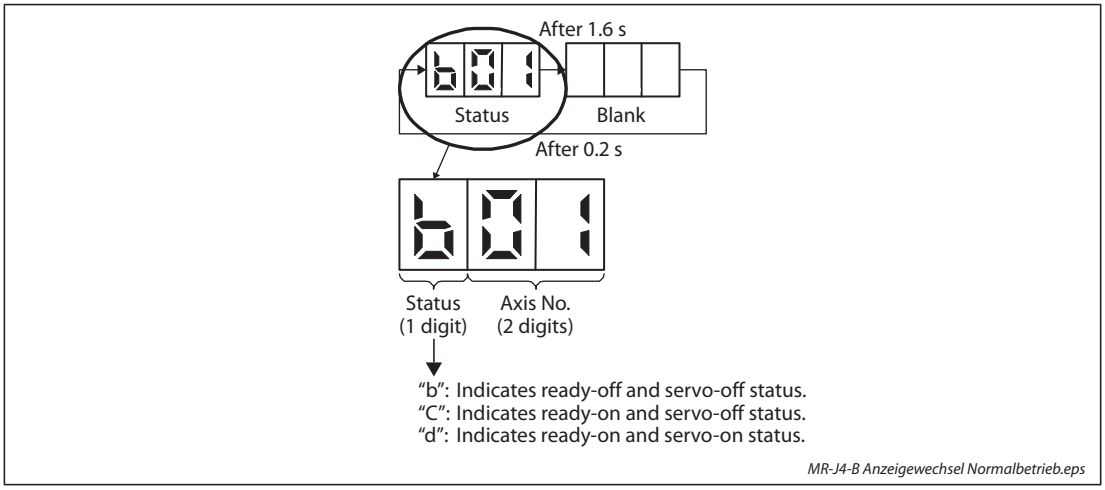

Fig. 6-16: *Alternating display in normal operation*

Alarm display

When an alarm occurs, the alarm number (two digits) and the alarm detail (one digit) are displayed following the status display. For example, the following shows when AL. 32 (Overcurrent) is occurring.

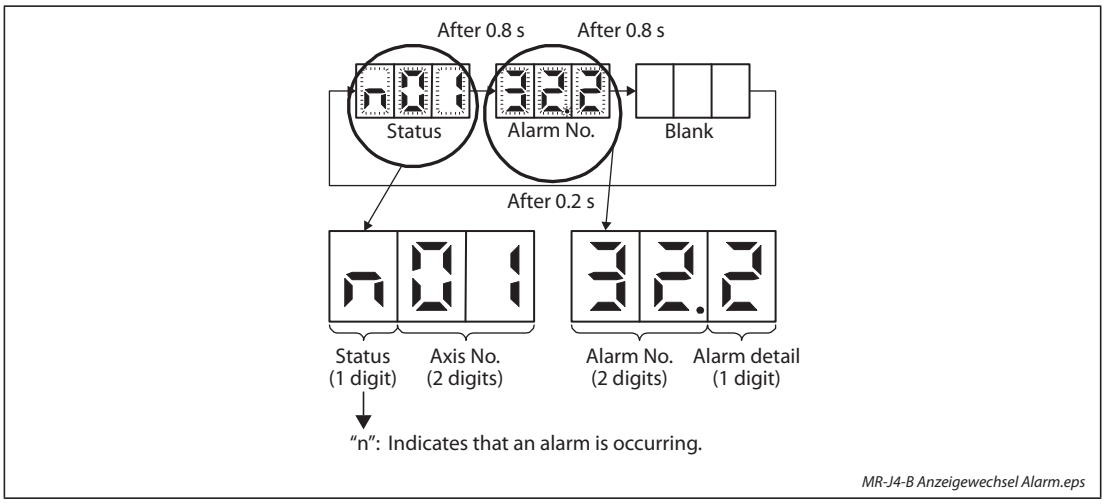

Fig. 6-17: *Alternating display when alarm occurs*

6.2.3 Display sequence

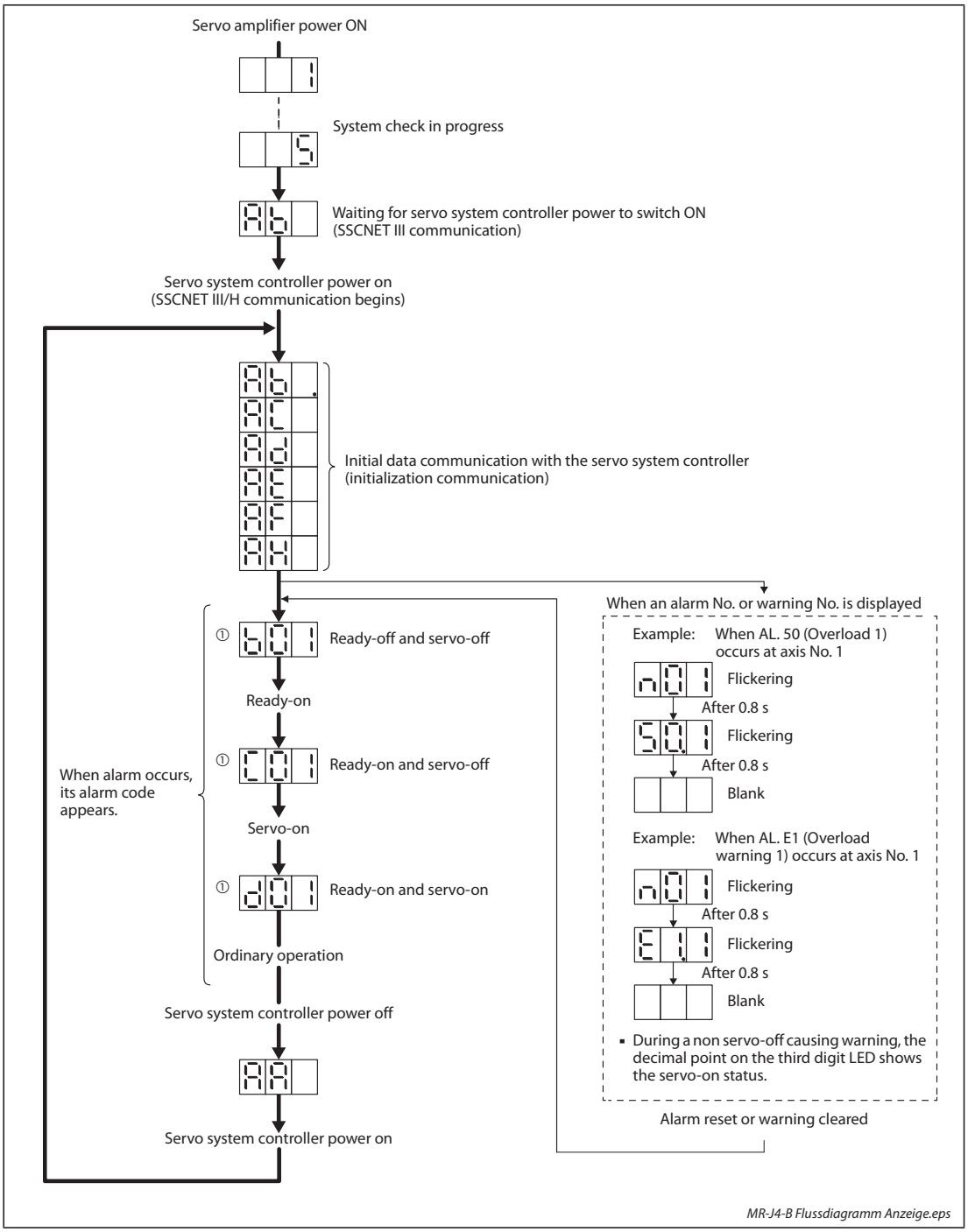

Fig. 6-18: *Status display of an axis*

① 01 02 … 64 The segment of the last 2 digits shows the axis number.

Axis No. 1 Axis No. 2 Axis No. 64

6.2.4 Test operation mode

WARNING:

- ***The test operation mode is designed for checking servo operation. It is not for checking machine operation. Do not use this mode with the machine. Always use the servo motor alone.***
- ***If the servo motor operates abnormally, use EM2 (Forced stop 2) to stop it.***

By using a personal computer and MR Configurator2, you can execute jog operation, positioning operation, DO forced output program operation without connecting the servo system controller.

NOTES

The content described in this section indicates that the servo amplifier and a personal computer are directly connected.

For full information, refer to the MR Configurator2 Installation Guide.

Test operation mode in MR Configurator2

NOTE

When the test operation mode is selected with the test operation select switch (SW2-1), the SSCNET III/H communication for the servo amplifier in the test operation mode and the following servo amplifiers is blocked.

- JOG operation

  JOG operation can be performed without using the servo system controller. Use this operation with the forced stop reset. This operation may be used independently of whether the servo is on or off and whether the servo system controller is connected or not.
  Exercise control on the jog operation screen of MR Configurator2.

Item	Initial setting	Setting range
Speed [1/min]	200	0 to max. speed
Acceleration/deceleration time constant [ms]	1000	0 to 50000

Tab. 6-11: *Operation pattern for jog operation*

Operation method

Operation	Screen control
Forward rotation start	Keep pressing the "Forward" button.
Reverse rotation start	Keep pressing the "Reverse" button.
Stop	Release the "Forward" or "Reverse" button.
Forced stop	Click the "Forced stop" button.

Tab. 6-12:
When the check box of "Rotation only while the CCW or CW button is being pushed." is checked.

Operation	Screen control
Forward rotation start	Click the "Forward" button.
Reverse rotation start	Click the "Reverse" button.
Stop	Click the "Stop" button.
Forced stop	Click the "Forced stop" button.

Tab. 6-13:
When the check box of "Rotation only while the CCW or CW button is being pushed." is not checked.

- Positioning operation

Positioning operation can be performed without using the servo system controller. Use this operation with the forced stop reset. This operation may be used independently of whether the servo is on or off and whether the servo system controller is connected or not.
Exercise control on the positioning operation screen of MR Configurator2.

Item	Initial setting	Setting range
Travel distance [pulse]	4000	0 to 99999999
Speed [1/min]	200	0 to max. speed
Acceleration/deceleration time constant [ms]	1000	0 to 50000
Repeat pattern	Fwd. rot. (CCW) to rev. rot. (CW)	Fwd. rot. (CCW) to rev. rot. (CW) Fwd. rot. (CCW) to fwd. rot. (CCW) Rev. rot. (CW) to fwd. rot. (CCW) Rev. rot. (CW) to rev. rot. (CW)
Dwell time [s]	2.0	0.1 to 50.0
Number of operations [times]	1	1 to 9999

Tab. 6-14: *Operation pattern for positioning operation*

Operation	Screen control
Forward rotation start	Click the "Forward" button.
Reverse rotation start	Click the "Reverse" button.
Stop	Click the "Stop" button.
Forced stop	Click the "Forced stop" button.

Tab. 6-15:
Operation method for positioning operation

- Program operation

Positioning operation can be performed in two or more operation patterns combined, without using the servo system controller. Use this operation with the forced stop reset. This operation may be used independently of whether the servo is on or off and whether the servo system controller is connected or not.
Exercise control on the program operation screen of MR Configurator2.

Operation	Screen control
Start	Click the "Start" button.
Pause	Click the "Pause" button.
Stop	Click the "Stop" button.
Forced stop	Click the "Forced stop" button.

Tab. 6-16:
Operation method for program operation

● Output signal (DO) forced output

Output signals can be switched on/off forcibly independently of the servo status. Use this function for output signal wiring check, etc. Exercise control on the DO forced output screen of MR Configurator2.

Operation procedure

① Turn off the power.

② Turn "ON (up)" SW2-1.

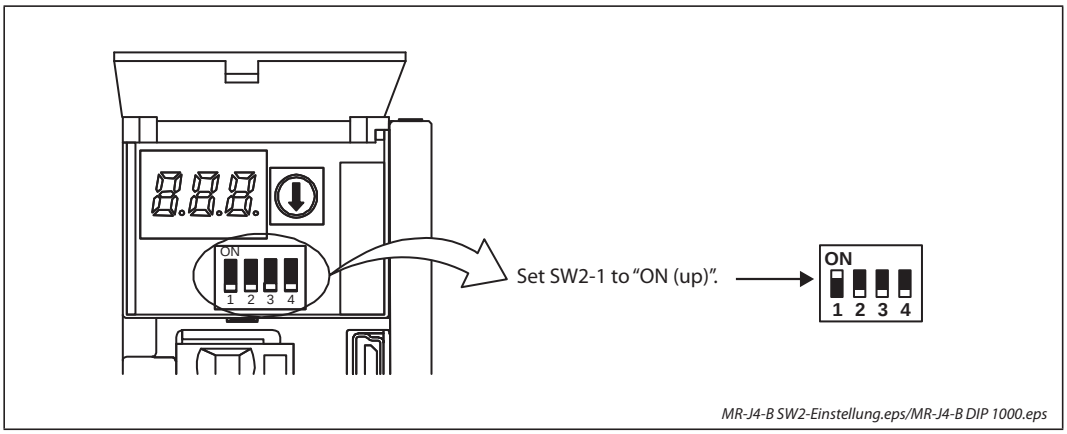

Fig. 6-19: *Setting of SW2-1 for test operation*

Turning "ON (up)" SW2-1 during power-on will not start the test operation mode.

③ Turn on the servo amplifier.
When initialization is completed, the decimal point on the first digit will flicker.

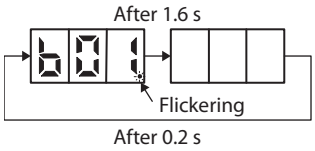

When an alarm or warning also occurs during the test operation, the decimal point on the first digit will flicker as follows.

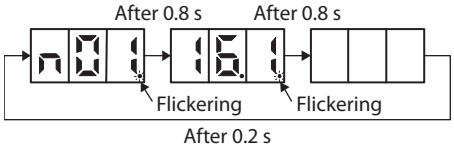

④ Start operation with the personal computer.

6.2.5 Motor-less operation in controller

NOTES

Use motor-less operation which is available by making the servo system controller parameter setting.

Connect the servo system controller to the servo amplifier before the motor-less operation.

The motor-less operation using a controller is available with rotary servo motors only. It will be available with linear servo motors and direct drive motors in the future.

Motor-less operation

Without connecting the servo motor to the servo amplifier, output signals or status displays can be provided in response to the servo system controller commands as if the servo motor is actually running. This operation may be used to check the servo system controller sequence. Use this operation with the forced stop reset. Use this operation with the servo amplifier connected to the servo system controller.

To stop the motor-less operation, set the motor-less operation selection to "Disable" in the servo parameter setting of the servo system controller. When the power supply is turned on next time, motorless operation will be disabled.

Load item	Condition
Load torque	0
Load to motor inertia ratio	Same as the moment of inertia of the servo motor

Tab. 6-17: *Load conditions for motor-less operation*

The following alarms and warnings do not occur. However, the other alarms and warnings occur as when the servo motor is connected.

Alarm and warning	Rotary servo motor	Linear servo motor	Direct drive servo motor	Rotary servo motor in fully closed loop system ①
AL. 16 (Encoder initial communication error 1)	✔	✔	✔	✔
AL. 1E (Encoder initial communication error 2)	✔	✔	✔	✔
AL. 1F (Encoder initial communication error 3)	✔	✔	✔	✔
AL. 20 (Encoder normal communication error 1)	✔	✔	✔	✔
AL. 21 (Encoder normal communication error 2)	✔	✔	✔	✔
AL. 25 (Absolute position erased)	✔	—	✔	✔
AL. 28 (Linear encoder error 2)	—	✔	—	✔
AL. 2A (Linear encoder error 1)	—	✔	—	✔
AL. 2B (Encoder counter error)	—	—	✔	—
AL. 92 (Battery cable disconnection warning)	✔	—	✔	✔
AL. 9F (Battery warning)	✔	—	✔	✔
AL. 70 (Load-side encoder error 1)	—	—	—	✔
AL. 71 (Load-side encoder error 2)	—	—	—	✔

Tab. 6-18: *Alarms and warnings during motor-less operation*

① The fully closed loop system is available for the MR-J4-□B□(-RJ) servo amplifiers of which software version is A3 or above. Check the software version using MR Configurator2.

Operation procedure

① Set the servo amplifier to the servo-off status.

② Set Parameter PC05 to "□□□1", turn "OFF (down: normal condition side)" the test operation mode switch (SW2-1), and then turn on the power supply.

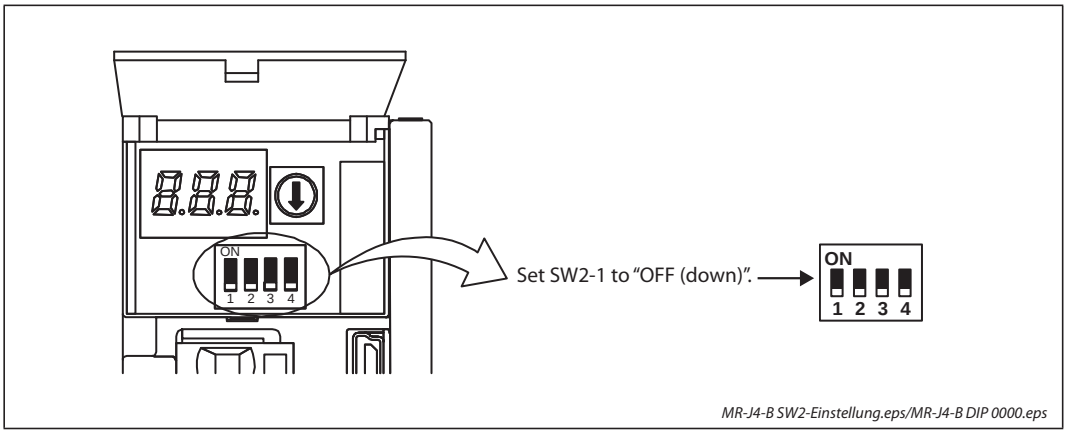

Fig. 6-20: *Setting of SW2-1 for motor-less operation*

③ Start the motor-less operation with the servo system controller.

The display shows the following screen.

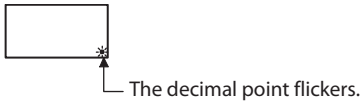

6.3 Display and operation section of MR-J4W-B series

On the servo amplifier display (three-digit, seven-segment LED), check the status of communication with the servo system controller at power-on, and the axis number, and diagnose a malfunction at occurrence of an alarm.

Switching to the test operation mode, deactivating control axes, and setting control axis No. are enabled with switches on the servo amplifier.

6.3.1 Overview

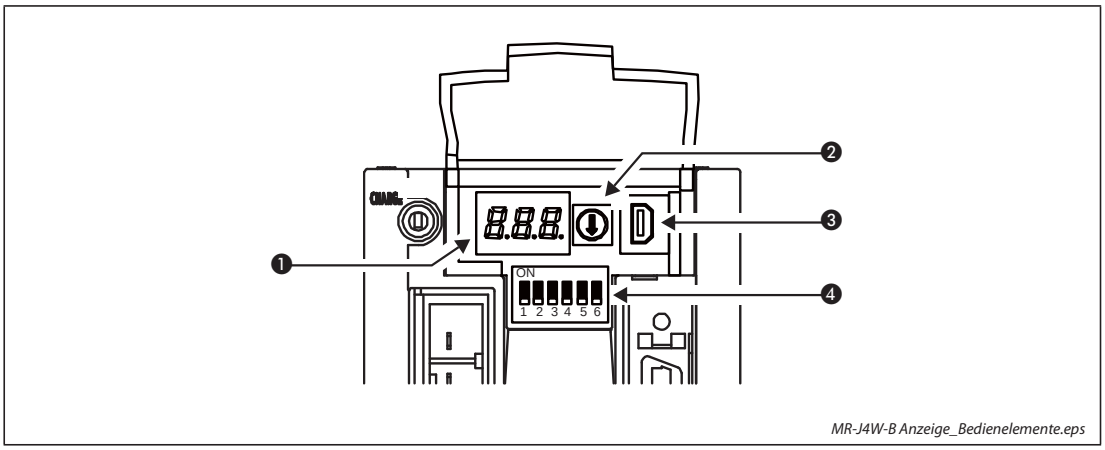

Fig. 6-21: *Display and controls of MR-J4-B*

No.	Name	Description	Refer to
❶	Display	The 3-digit, seven-segment LED shows the servo status and alarm number	section 6.2.2 section 6.2.3
❷	 SW1: Rotary axis setting switch	Used to set the axis number of the servo amplifier. (Axis No. 1–16)	page 4-34
❸	USB connector (CN5)	Connect with PC for communication	section 4.4.2
❸	SW2: Control axis setting switch 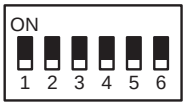	SW2-1 is used to perform the test operation mode. SW2-2, 2-3, 2-4 ① are used for disabling the control axes A/B/C ①. SW2-5 and 2-6 are auxiliary switches for setting the axis No. 17–64	page 6-34 page 4-34

Tab. 6-19: *Controls and function*

① SW2-4 is only for the 3-axes model MR-J4W3-B to disable axis C. With the 2-axes model MR-J4W2-B SW2-4 is for manufacturer setting.

Disabling control axis switches (SW2-2, SW2-3, and SW2-4)

For disabling the control axes refer to section 4.8.

6.3.2 Scrolling display

Displaying the status of each axis in rotation enables you to check the status of all axes.

Normal display

When there is no alarm, the status of all axes are displayed in rotation.

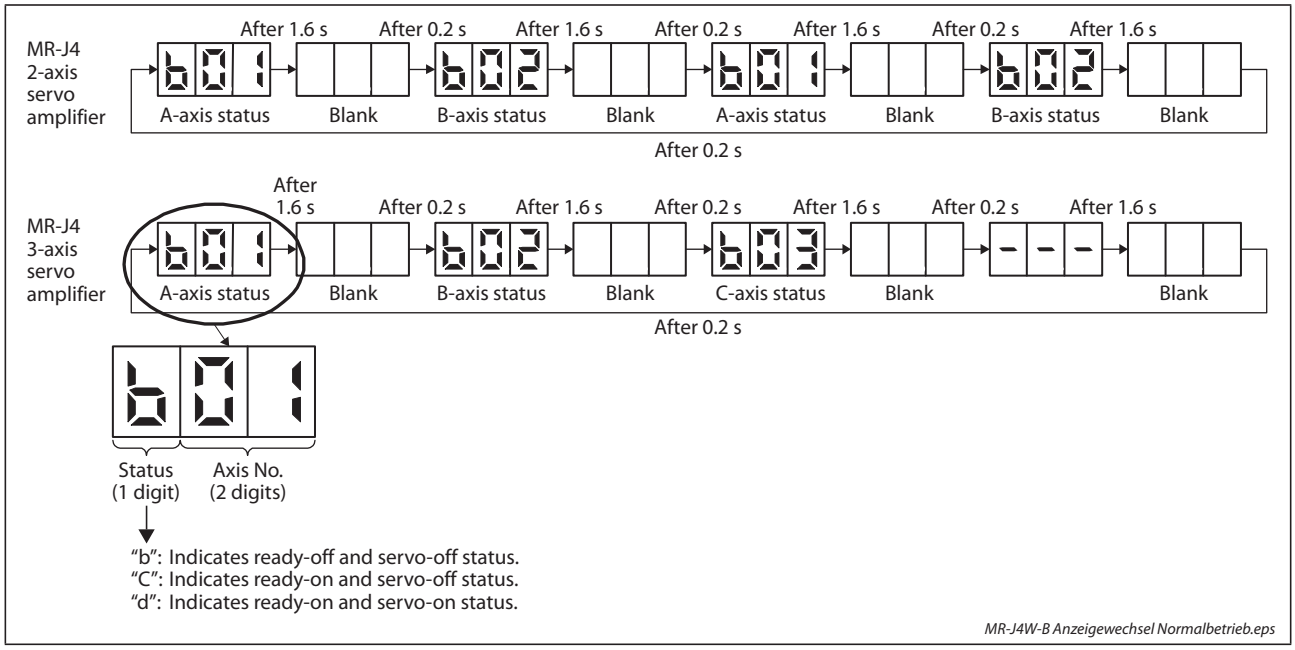

Fig. 6-22: *Alternating display in normal operation*

Alarm display

When an alarm occurs, the alarm number (two digits) and the alarm detail (one digit) are displayed following the status display. For example, the following shows when AL. 16 (Encoder initial communication error 1 is occurring at the A-axis, and AL. 32 (Overcurrent) is occurring at the B-axis simultaneously.

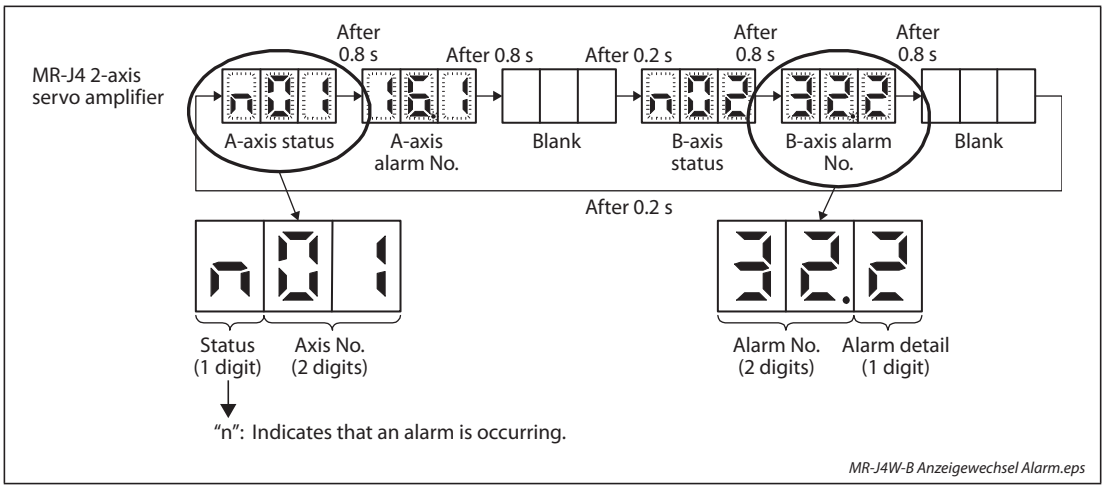

Fig. 6-23: *Alternating display when alarm occurs*

6.3.3 Display sequence

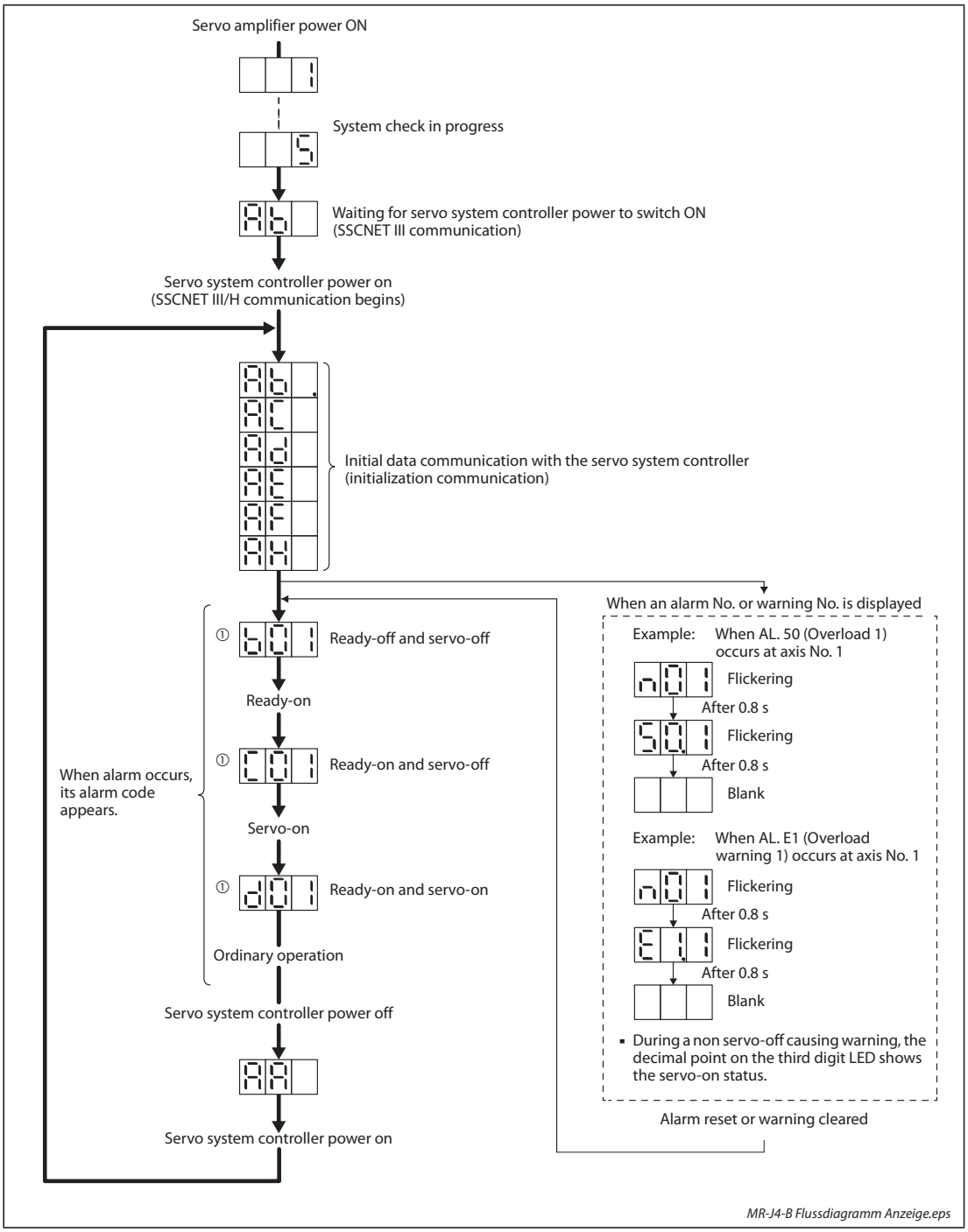

Fig. 6-24: *Status display of an axis*

① 01 02 … 64 The segment of the last 2 digits shows the axis number.

Axis No. 1 Axis No. 2 Axis No. 64

6.3.4 Test operation mode

WARNING:

- ***The test operation mode is designed for checking servo operation. It is not for checking machine operation. Do not use this mode with the machine. Always use the servo motor alone.***
- ***If the servo motor operates abnormally, use EM2 (Forced stop 2) to stop it.***

By using a personal computer and MR Configurator2, you can execute jog operation, positioning operation, DO forced output program operation without connecting the servo system controller.

NOTES

The content described in this section indicates that the servo amplifier and a personal computer are directly connected.

For full information, refer to the MR Configurator2 Installation Guide.

Test operation mode in MR Configurator2

NOTES

All axes will be in the test operation mode for the multi-axis servo amplifier. Although only one axis is active in the mode.

When the test operation mode is selected with the test operation select switch (SW2-1), the SSCNET III/H communication for the servo amplifier in the test operation mode and the following servo amplifiers is blocked.

- JOG operation

  JOG operation can be performed without using the servo system controller. Use this operation with the forced stop reset. This operation may be used independently of whether the servo is on or off and whether the servo system controller is connected or not.
  Exercise control on the jog operation screen of MR Configurator2.

Item	Initial setting	Setting range
Speed [1/min]	200	0 to max. speed
Acceleration/deceleration time constant [ms]	1000	0 to 50000

Tab. 6-20: *Operation pattern for jog operation*

Operation method

Operation	Screen control
Forward rotation start	Keep pressing the "Forward" button.
Reverse rotation start	Keep pressing the "Reverse" button.
Stop	Release the "Forward" or "Reverse" button.
Forced stop	Click the "Forced stop" button.

Tab. 6-21:
When the check box of "Rotation only while the CCW or CW button is being pushed." is checked.

Operation	Screen control
Forward rotation start	Click the "Forward" button.
Reverse rotation start	Click the "Reverse" button.
Stop	Click the "Stop" button.
Forced stop	Click the "Forced stop" button.

Tab. 6-22:
When the check box of "Rotation only while the CCW or CW button is being pushed." is not checked.

- Positioning operation

Positioning operation can be performed without using the servo system controller. Use this operation with the forced stop reset. This operation may be used independently of whether the servo is on or off and whether the servo system controller is connected or not.
Exercise control on the positioning operation screen of MR Configurator2.

Item	Initial setting	Setting range
Travel distance [pulse]	4000	0 to 99999999
Speed [1/min]	200	0 to max. speed
Acceleration/deceleration time constant [ms]	1000	0 to 50000
Repeat pattern	Fwd. rot. (CCW) to rev. rot. (CW)	Fwd. rot. (CCW) to rev. rot. (CW) Fwd. rot. (CCW) to fwd. rot. (CCW) Rev. rot. (CW) to fwd. rot. (CCW) Rev. rot. (CW) to rev. rot. (CW)
Dwell time [s]	2.0	0.1 to 50.0
Number of operations [times]	1	1 to 9999

Tab. 6-23: *Operation pattern for positioning operation*

Operation	Screen control
Forward rotation start	Click the "Forward" button.
Reverse rotation start	Click the "Reverse" button.
Stop	Click the "Stop" button.
Forced stop	Click the "Forced stop" button.

Tab. 6-24:
Operation method for positioning operation

- Program operation

Positioning operation can be performed in two or more operation patterns combined, without using the servo system controller. Use this operation with the forced stop reset. This operation may be used independently of whether the servo is on or off and whether the servo system controller is connected or not.
Exercise control on the program operation screen of MR Configurator2.

Operation	Screen control
Start	Click the "Start" button.
Pause	Click the "Pause" button.
Stop	Click the "Stop" button.
Forced stop	Click the "Forced stop" button.

Tab. 6-25:
Operation method for positioning operation

● Output signal (DO) forced output

Output signals can be switched on/off forcibly independently of the servo status. Use this function for output signal wiring check, etc. Exercise control on the DO forced output screen of MR Configurator2.

Operation procedure

① Turn off the power.

② Turn "ON (up)" SW2-1.

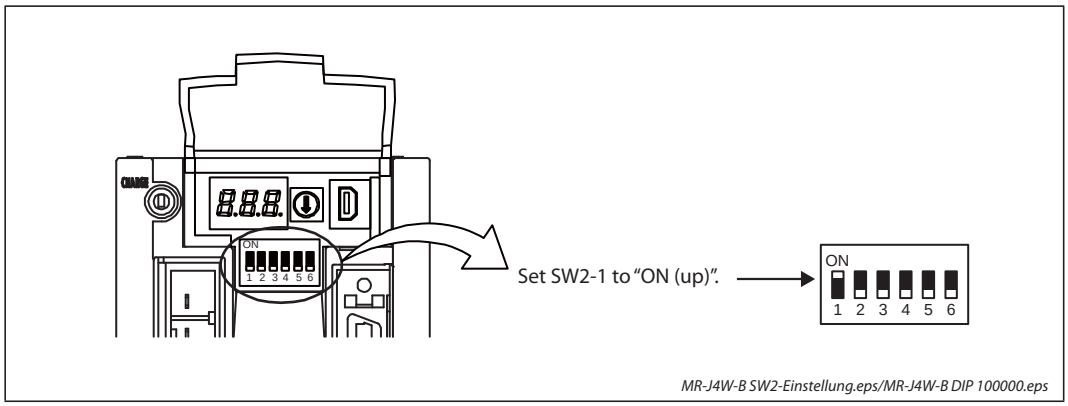

Fig. 6-25: *Setting of SW2-1 for test operation*

Turning "ON (up)" SW2-1 during power-on will not start the test operation mode.

③ Turn on the servo amplifier.
When initialization is completed, the decimal point on the first digit will flicker.

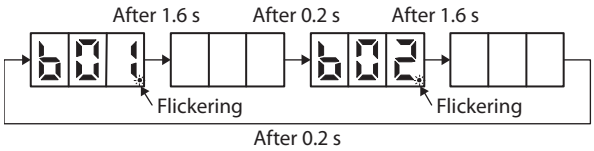

When an alarm or warning also occurs during the test operation, the decimal point on the first digit will flicker as follows.

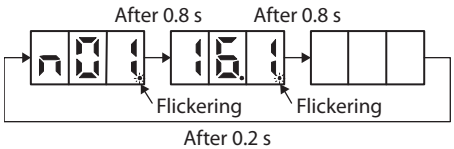

④ Start operation with the personal computer.

6.3.5 Motor-less operation in controller

NOTES

Use motor-less operation which is available by making the servo system controller parameter setting

Connect the servo system controller to the servo amplifier before the motor-less operation.

The motor-less operation using a controller is available with rotary servo motors only. It will be available with linear servo motors and direct drive motors in the future.

Motor-less operation

Without connecting the servo motor to the servo amplifier, output signals or status displays can be provided in response to the servo system controller commands as if the servo motor is actually running. This operation may be used to check the servo system controller sequence. Use this operation with the forced stop reset. Use this operation with the servo amplifier connected to the servo system controller.

To stop the motor-less operation, set the motor-less operation selection to "Disable" in the servo parameter setting of the servo system controller. When the power supply is turned on next time, motorless operation will be disabled.

Load item	Condition
Load torque	0
Load to motor inertia ratio	Same as the moment of inertia of the servo motor

Tab. 6-26: *Load conditions for motor-less operation*

The following alarms and warnings do not occur. However, the other alarms and warnings occur as when the servo motor is connected.

Alarm and warning	Rotary servo motor	Linear servo motor	Direct drive servo motor	Rotary servo motor in fully closed loop system ①
AL. 16 (Encoder initial communication error 1)	✔	✔	✔	✔
AL. 1E (Encoder initial communication error 2)	✔	✔	✔	✔
AL. 1F (Encoder initial communication error 3)	✔	✔	✔	✔
AL. 20 (Encoder normal communication error 1)	✔	✔	✔	✔
AL. 21 (Encoder normal communication error 2)	✔	✔	✔	✔
AL. 25 (Absolute position erased)	✔	—	✔	✔
AL. 28 (Linear encoder error 2)	—	✔	—	✔
AL. 2A (Linear encoder error 1)	—	✔	—	✔
AL. 2B (Encoder counter error)	—	—	✔	—
AL. 92 (Battery cable disconnection warning)	✔	—	✔	✔
AL. 9F (Battery warning)	✔	—	✔	✔
AL. 70 (Load-side encoder error 1)	—	—	—	✔
AL. 71 (Load-side encoder error 2)	—	—	—	✔

Tab. 6-27: *Alarms and warnings during motor-less operation*

① The fully closed loop system is available for the MR-J4W2-□B servo amplifiers of which software version is A3 or above. Check the software version using MR Configurator2.

Operation procedure

① Set the servo amplifier to the servo-off status.

② Set parameter PC05 to "□□□1", turn "OFF (down: normal condition side)" the test operation mode switch (SW2-1), and then turn on the power supply.

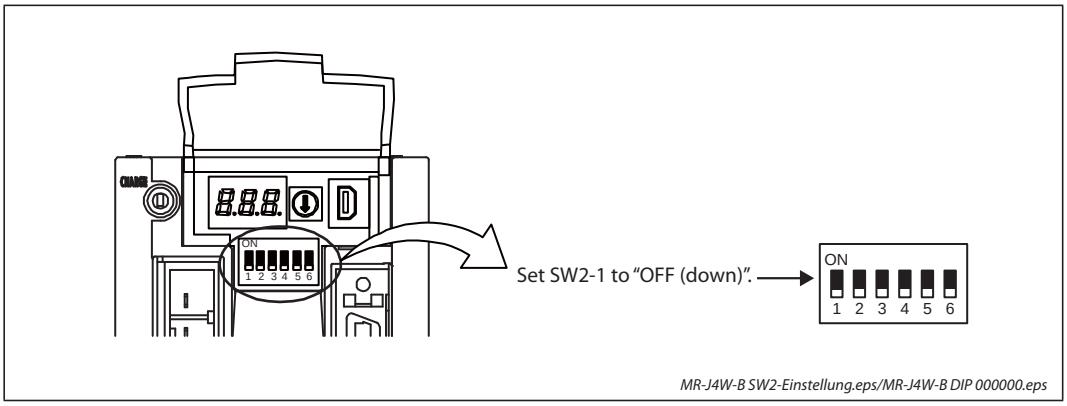

Fig. 6-26: *Setting of SW2-1 for motor-less operation*

③ Start the motor-less operation with the servo system controller.

The display shows the following screen.

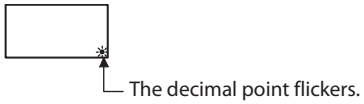

6.4 Display and switch setting and of the MR-J4-GF(-RJ) series

Switching to the test operation mode and setting station No. are enabled with switches on the servo amplifier.

On the servo amplifier display (three-digit, seven-segment LED), check the status of communication with the servo system controller at power-on, and the station number, and diagnose a malfunction at occurrence of an alarm. The communication status of the CN1A connector and CN1B connector can be checked with the LED (for LED indication list refer to tab. 4-18).

6.4.1 Overview

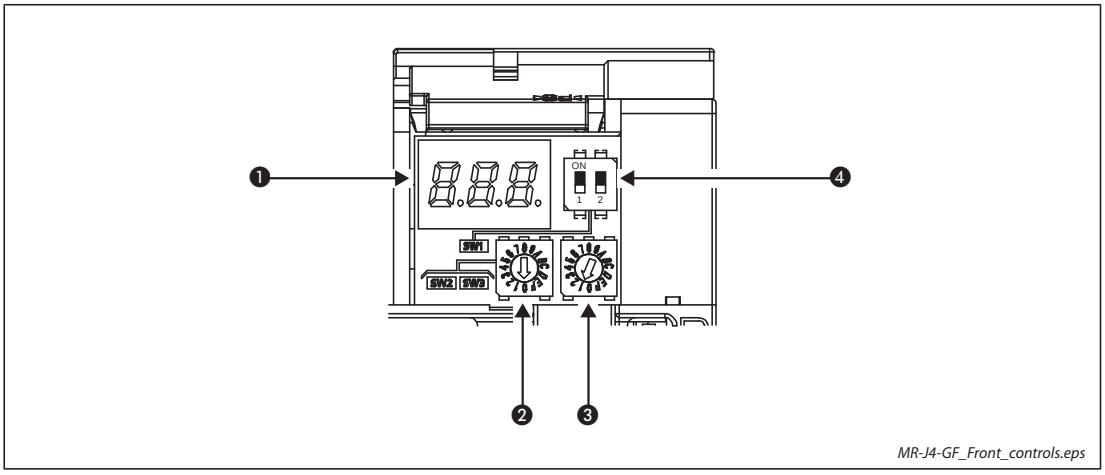

Fig. 6-27: *Display and controls of MR-J4-GF(-RJ)*

No.	Name	Description		Refer to
❶	Display	The 3-digit, seven-segment LED shows the servo status and alarm number		section 6.4.2 section 6.4.3
❷	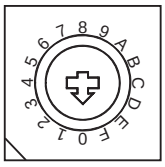 SW2/SW3: Station number setting rotary switch	Used to set the station number of the servo amplifier.	SW2: Upper value	section 4.9
❸			SW3: Lower value	
❹	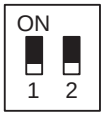 SW1: Mode select switch	To change mode to the test operation mode, set the switch. (SW1-1) SW1-2 is for manufacturer setting.		page 6-43

Tab. 6-28: *Controls and function*

6.4.2 Scrolling display

Station number will be displayed in hexadecimal.

Normal display

When there is no alarm, the station No. is displayed.

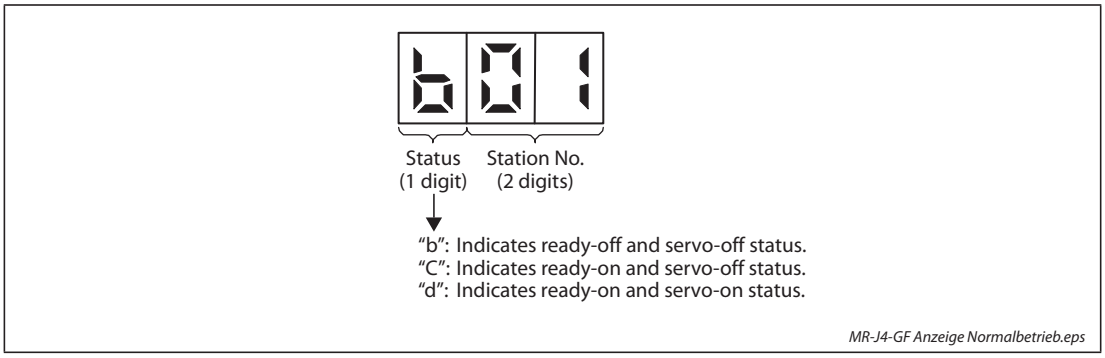

Fig. 6-28: *Display in normal operation*

Alarm display

When an alarm occurs, the alarm number (two digits) and the alarm detail (one digit) are displayed following the status display. For example, the following shows when AL. 32 (Overcurrent) is occurring.

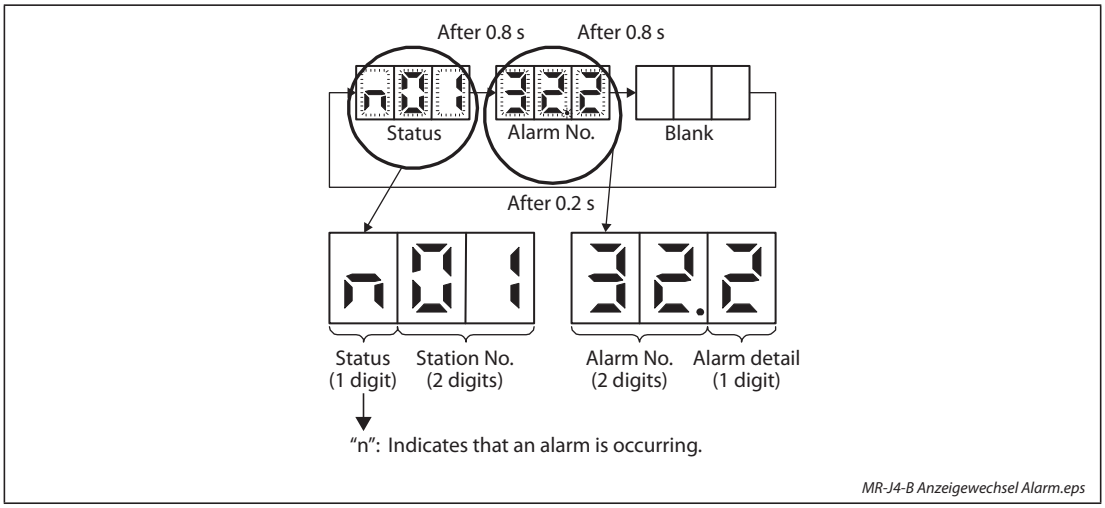

Fig. 6-29: *Alternating display when alarm occurs*

If an alarm occurs during initial communication through a network, the status, the alarm number (two digits) and alarm detail (one digit), and the network initial communication status are displayed, in that order. For example, the following shows when AL. 16.1(Encoder initial communication - Receive data error 1) is occurring.

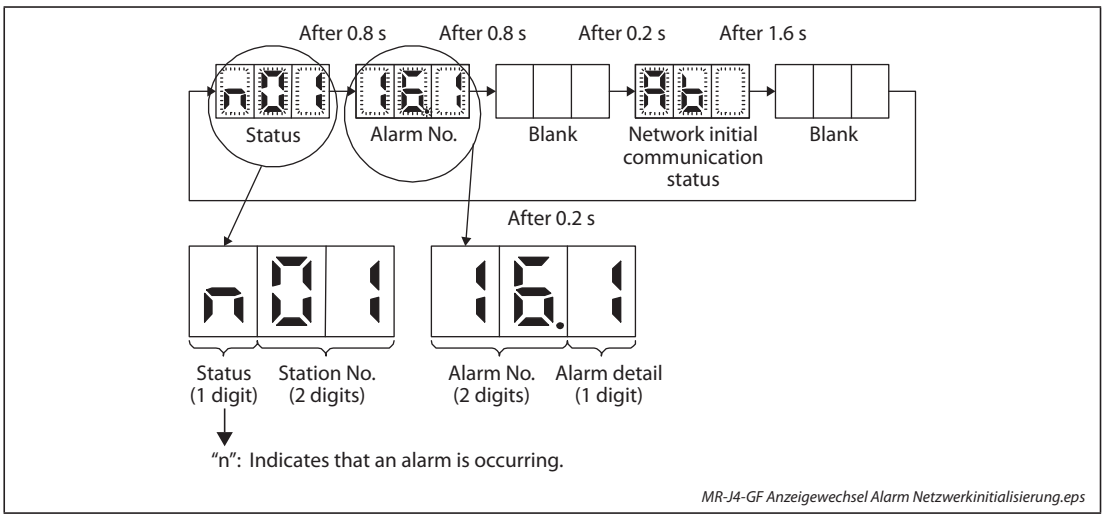

Fig. 6-30: *Alternating display when alarm occurs during initial communication through a network*

6.4.3 Display sequence

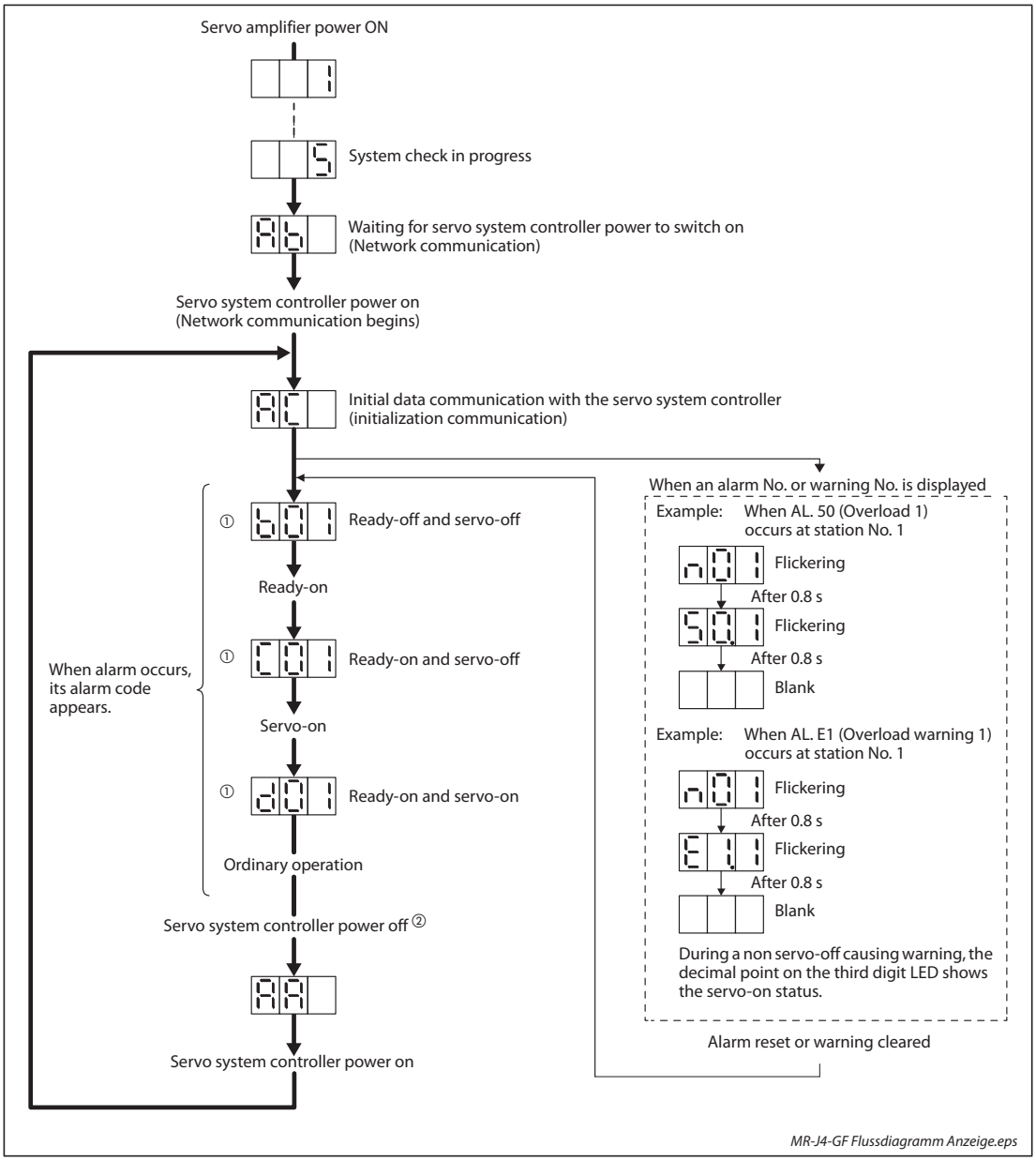

Fig. 6-31: *Status display of a station*

① 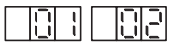 ⋯ The segment of the last 2 digits shows the station number.

Station No. 1 Station No. 2

② Always make the servo-off status before turning off the controller power. Otherwise, AL. 8D may occur.

6.4.4 Test operation mode

WARNING:

- ***The test operation mode is designed for checking servo operation. It is not for checking machine operation. Do not use this mode with the machine. Always use the servo motor alone.***
- ***If the servo motor operates abnormally, use EM2 (Forced stop 2) to stop it.***

By using a personal computer and MR Configurator2, you can execute jog operation, positioning operation, DO forced output program operation without connecting the servo system controller.

NOTES

The content described in this section indicates that the servo amplifier and a personal computer are directly connected.

For full information, refer to the MR Configurator2 Installation Guide.

Test operation mode in MR Configurator2

NOTE

When the test operation mode is selected with the test operation select switch (SW1-1), the Network communication for the servo amplifier in the test operation mode and the following servo amplifiers is blocked.

- JOG operation

  JOG operation can be performed without using the servo system controller. Use this operation with the forced stop reset. This operation may be used independently of whether the servo is on or off and whether the servo system controller is connected or not.
  Exercise control on the jog operation screen of MR Configurator2.

Item	Initial setting	Setting range
Speed [1/min]	200	0 to max. speed
Acceleration/deceleration time constant [ms]	1000	0 to 50000

Tab. 6-29: *Operation pattern for jog operation*

Operation method

Operation	Screen control
Forward rotation start	Keep pressing the "Forward" button.
Reverse rotation start	Keep pressing the "Reverse" button.
Stop	Release the "Forward" or "Reverse" button.
Forced stop	Click the "Forced stop" button.

Tab. 6-30:
When the check box of "Rotation only while the CCW or CW button is being pushed." is checked.

Operation	Screen control
Forward rotation start	Click the "Forward" button.
Reverse rotation start	Click the "Reverse" button.
Stop	Click the "Stop" button.
Forced stop	Click the "Forced stop" button.

Tab. 6-31:
When the check box of "Rotation only while the CCW or CW button is being pushed." is not checked.

- Positioning operation

Positioning operation can be performed without using the servo system controller. Use this operation with the forced stop reset. This operation may be used independently of whether the servo is on or off and whether the servo system controller is connected or not.
Exercise control on the positioning operation screen of MR Configurator2.

Item	Initial setting	Setting range
Travel distance [pulse]	4000	0 to 99999999
Speed [1/min]	200	0 to max. speed
Acceleration/deceleration time constant [ms]	1000	0 to 50000
Repeat pattern	Fwd. rot. (CCW) to rev. rot. (CW)	Fwd. rot. (CCW) to rev. rot. (CW) Fwd. rot. (CCW) to fwd. rot. (CCW) Rev. rot. (CW) to fwd. rot. (CCW) Rev. rot. (CW) to rev. rot. (CW)
Dwell time [s]	2.0	0.1 to 50.0
Number of operations [times]	1	1 to 9999

Tab. 6-32: *Operation pattern for positioning operation*

Operation	Screen control
Forward rotation start	Click the "Forward" button.
Reverse rotation start	Click the "Reverse" button.
Stop	Click the "Stop" button.
Forced stop	Click the "Forced stop" button.

Tab. 6-33:
Operation method for positioning operation

- Program operation

Positioning operation can be performed in two or more operation patterns combined, without using the servo system controller. Use this operation with the forced stop reset. This operation may be used independently of whether the servo is on or off and whether the servo system controller is connected or not.
Exercise control on the program operation screen of MR Configurator2.

Operation	Screen control
Start	Click the "Start" button.
Pause	Click the "Pause" button.
Stop	Click the "Stop" button.
Forced stop	Click the "Forced stop" button.

Tab. 6-34:
Operation method for positioning operation

● Output signal (DO) forced output

Output signals can be switched on/off forcibly independently of the servo status. Use this function for output signal wiring check, etc. Exercise control on the DO forced output screen of MR Configurator2.

Operation procedure

① Turn off the power.

② Turn "ON (up)" SW1-1.

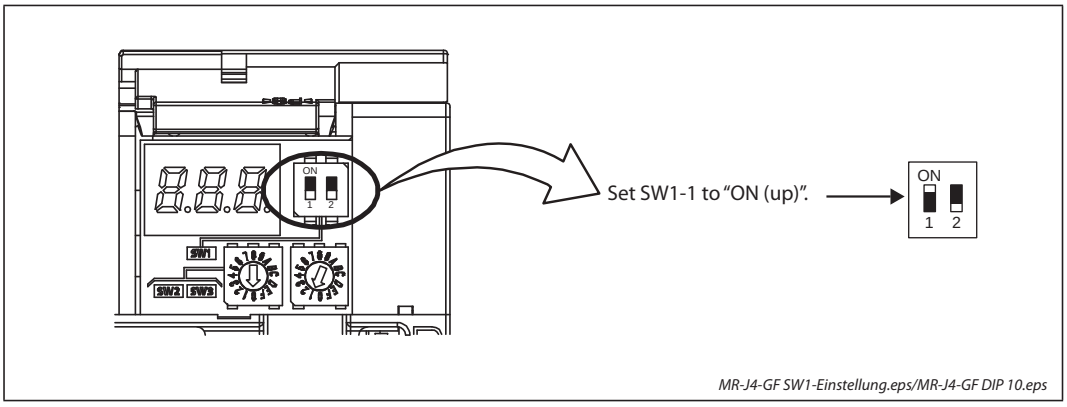

Fig. 6-32: *Setting of SW1-1 for test operation*

Turning "ON (up)" SW1-1 during power-on will not start the test operation mode.

③ Turn on the servo amplifier.
When initialization is completed, the decimal point on the first digit will flicker.

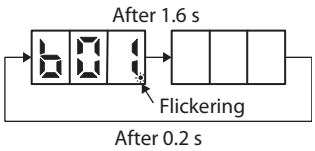

When an alarm or warning also occurs during the test operation, the decimal point on the first digit will flicker as follows.

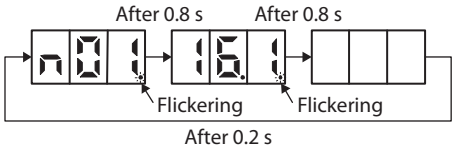

④ Start operation with the personal computer.

6.4.5 Motor-less operation in controller

NOTES

Connect the servo system controller to the servo amplifier before the motor-less operation.

The motor-less operation cannot be used in the fully closed loop control mode, linear servo motor control mode, or DD motor control mode.

Motor-less operation

Without connecting the servo motor to the servo amplifier, output signals or status displays can be provided in response to the servo system controller commands as if the servo motor is actually running. This operation may be used to check the servo system controller sequence. Use this operation with the forced stop reset. Use this operation with the servo amplifier connected to the servo system controller.

To stop the motor-less operation, set the motor-less operation selection to "Disabled (□□□0)" in parameter PC05. When the power supply is turned on next time, motorless operation will be disabled.

- Load conditions

Load item	Condition
Load torque	0
Load to motor inertia ratio	Pr. PB06 (Load to motor inertia ratio/load to motor mass ratio)

Tab. 6-35:
Load conditions for motor-less operation

- Alarms

  The following alarms and warnings do not occur. However, the other alarms and warnings occur as when the servo motor is connected.

  – AL. 16 (Encoder initial communication error 1)
  – AL. 1E (Encoder initial communication error 2)
  – AL. 1F (Encoder initial communication error 3)
  – AL. 20 (Encoder normal communication error 1)
  – AL. 21 (Encoder normal communication error 2)
  – AL. 25 (Absolute position erased)
  – AL. 92 (Battery cable disconnection warning)
  – AL. 9F (Battery warning)

Operation procedure

① Set the servo amplifier to the servo-off status.

② Set Parameter PC05 to "□□□1", turn "OFF (down: normal condition side)" the test operation mode switch (SW1-1), and then turn on the power supply.

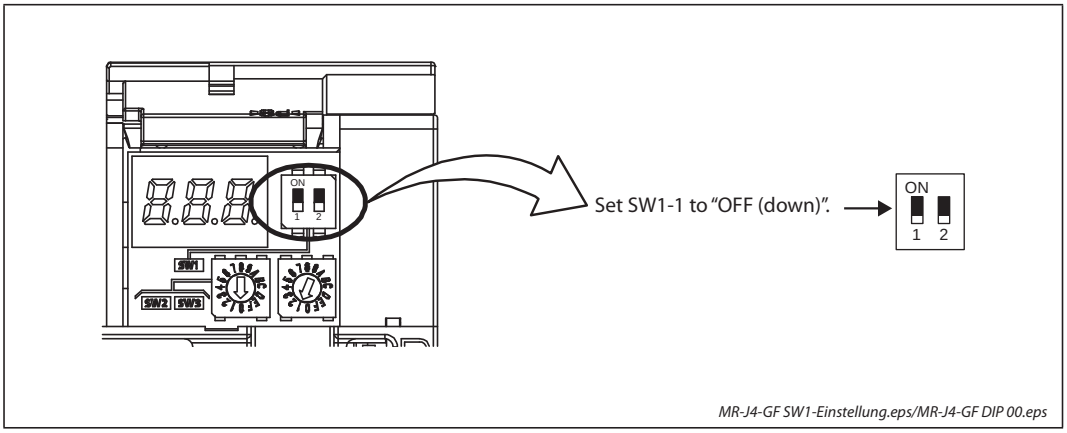

Fig. 6-33: *Setting of SW1-1 for motor-less operation*

③ Start the motor-less operation with the servo system controller.

The display shows the following screen.

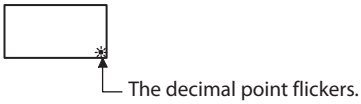

6.5 Display and switch setting and of the MR-J4-TM series

NOTE For EtherNet/IP, an IP address is displayed in the digit of the axis number.

Switching to the test operation mode and setting axis number are enabled with switches on the servo amplifier.

On the servo amplifier display (three-digit, seven-segment LED), check the status of communication with the controller at power-on, and the axis number, and diagnose a malfunction at occurrence of an alarm.

6.5.1 Overview

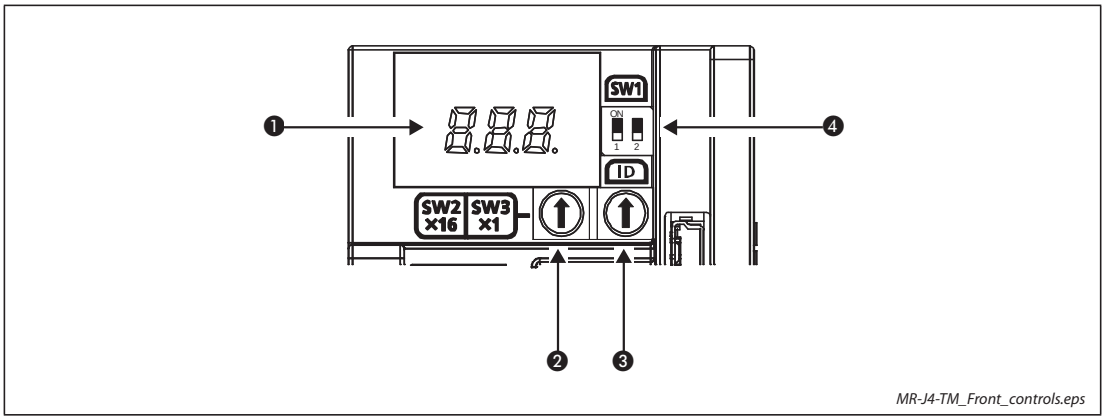

Fig. 6-34: *Display and controls of MR-J4-TM*

No.	Name	Description		Refer to
❶	Display	The 3-digit, seven-segment LED shows the servo status and alarm number		section 6.5.2 section 6.5.3
❷	SW2/SW3: Axis selection rotary switch	Used to set the axis No. of servo amplifier.	SW2: Upper value	section 4.10
❸			SW3: Lower value	
❹	ON 1 2 SW1: Mode select switch	To change mode to the test operation mode, set the switch. (SW1-1) SW1-2 is for manufacturer setting.		page 6-52

Tab. 6-36: *Controls and function*

6.5.2 Scrolling display

Axis number will be displayed in hexadecimal. For 100H or more, last two digits will be displayed.

Normal display

- For EtherCAT

  When there is no alarm, the axis No. and blank are displayed in rotation.

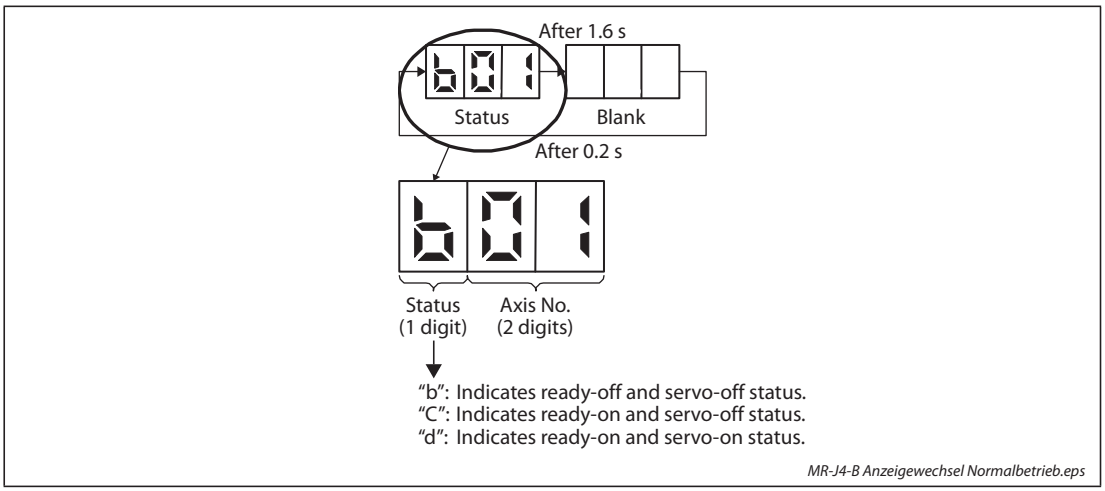

Fig. 6-35: *Alternating display in normal operation for EtherCAT*

- For EtherNet/IP

  When there is no alarm, the IP address is displayed.

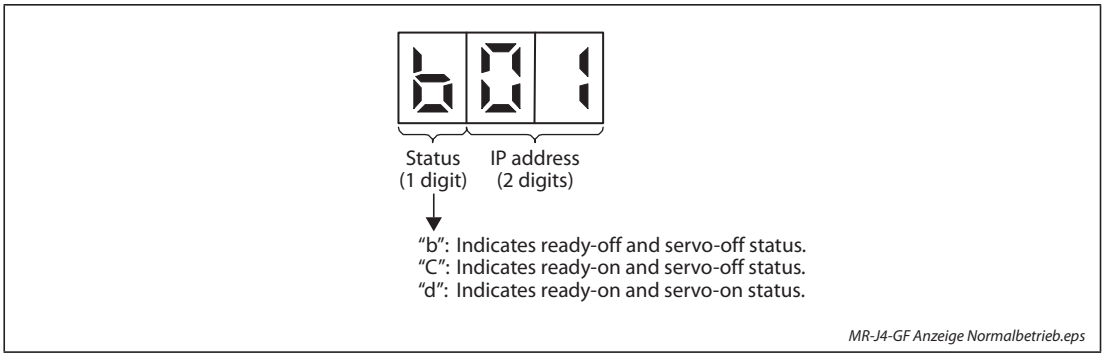

Fig. 6-36: *Display in normal operation for EtherNet/IP*

Alarm display

When an alarm occurs, the alarm number (two digits) and the alarm detail (one digit) are displayed following the status display. For example, the following shows when AL. 32 (Overcurrent) is occurring.

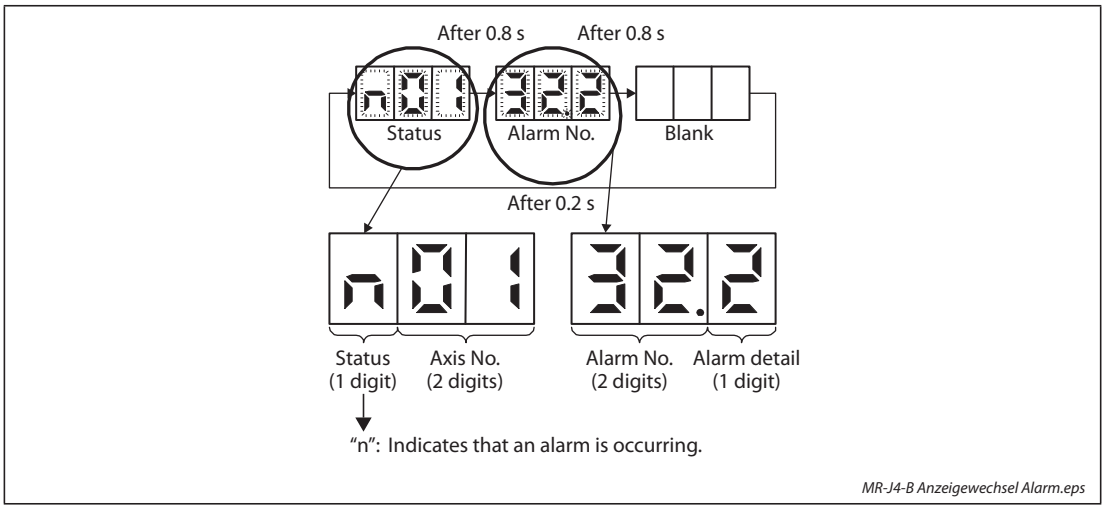

Fig. 6-37: *Alternating display when alarm occurs*

If an alarm occurs during initial communication through a network, the status, the alarm number (two digits) and alarm detail (one digit), and the network initial communication status are displayed, in that order. For example, the following shows when AL. 16.1(Encoder initial communication - Receive data error 1) is occurring.

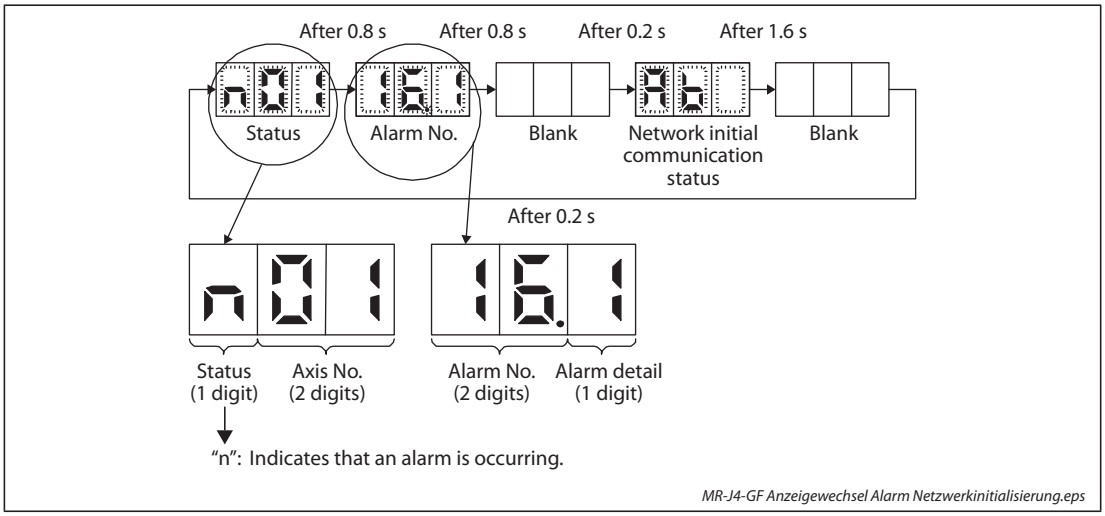

Fig. 6-38: *Alternating display when alarm occurs during initial communication through a network*

6.5.3 Display sequence

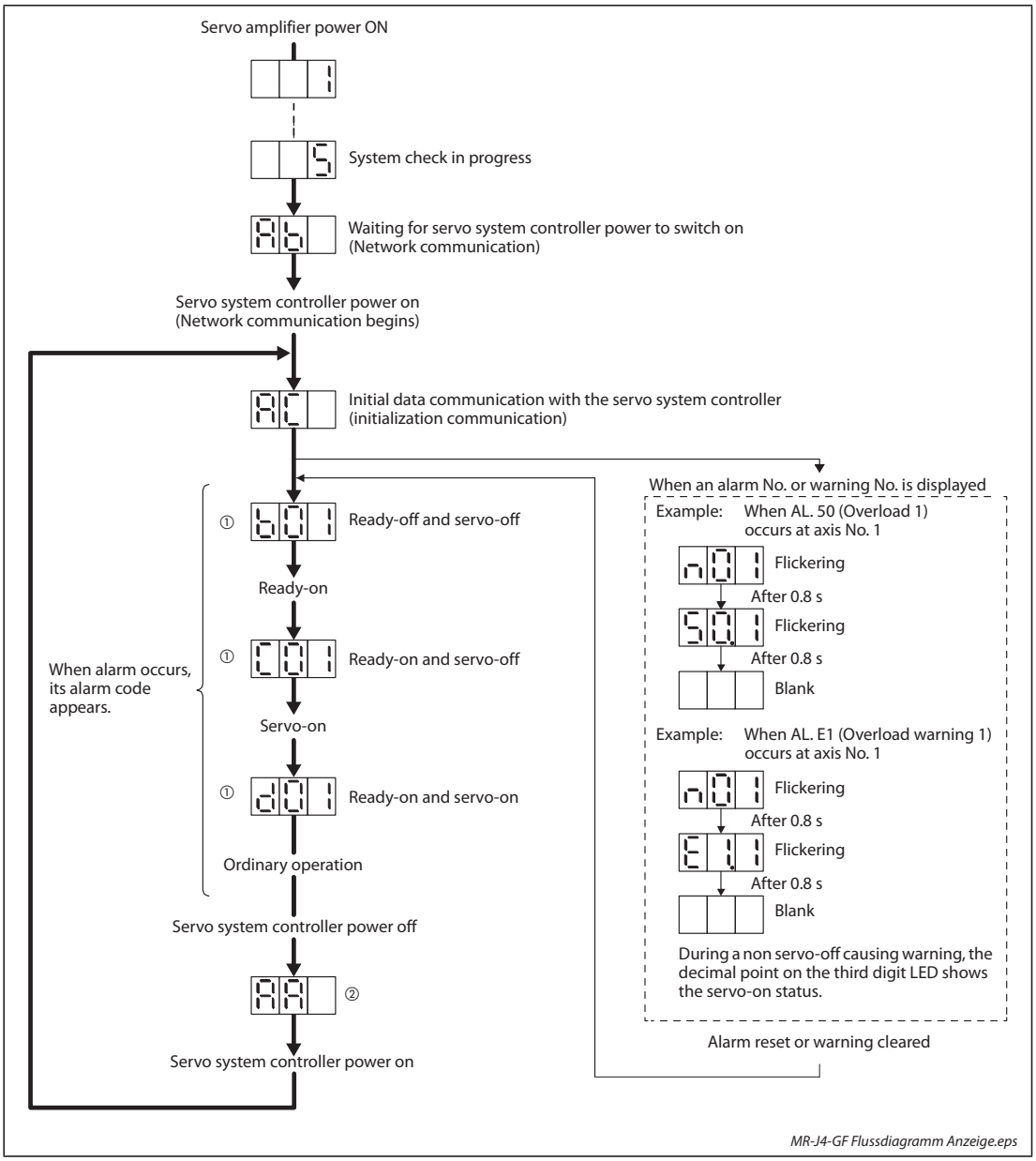

Fig. 6-39: *Status display of an axis*

① 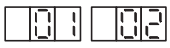 ··· The segment of the last 2 digits shows the axis number.

Axis No. 1 Axis No. 2

② For the EtherCAT, turning off the controller power in the "Operational" state triggers AL. 86.1 (Network communication error 1).

6.5.4 Test operation mode

WARNING:

- ***The test operation mode is designed for checking servo operation. It is not for checking machine operation. Do not use this mode with the machine. Always use the servo motor alone.***
- ***If the servo motor operates abnormally, use EM2 (Forced stop 2) to stop it.***

By using a personal computer and MR Configurator2, you can execute jog operation, positioning operation, DO forced output program operation without connecting the servo system controller.

NOTES

The content described in this section indicates that the servo amplifier and a personal computer are directly connected.

For full information, refer to the MR Configurator2 Installation Guide.

Test operation mode in MR Configurator2

NOTES

When the test operation mode is selected with the test operation select switch (SW1-1), the Network communication for the servo amplifier in the test operation mode and the following servo amplifiers is blocked.

For the EtherCAT, turning on the test operation select switch (SW1-1) with the following parameter settings triggers AL. 37 (Parameter error).

– "Automatic selection by each network (□□□0) (initial value)" of "Control mode selection" is selected in parameter PA01.

– "Switching by fully closed loop selection command from controller (C_CLD) and Input device CLD (Fully closed loop selection) (□□□1)" of "Fully closed loop function selection" is selected in parameter PE01.

In this case, select "Cyclic synchronous mode (□□□1)" of "Control mode selection" in parameter PA01, and turn on the test operation select switch (SW1-1).

- JOG operation

  JOG operation can be performed without using the servo system controller. Use this operation with the forced stop reset. This operation may be used independently of whether the servo is on or off and whether the servo system controller is connected or not.
  Exercise control on the jog operation screen of MR Configurator2.

Item	Initial setting	Setting range
Speed [1/min]	200	0 to max. speed
Acceleration/deceleration time constant [ms]	1000	0 to 50000

Tab. 6-37: *Operation pattern for jog operation*

Operation method

Operation	Screen control
Forward rotation start	Keep pressing the "Forward" button.
Reverse rotation start	Keep pressing the "Reverse" button.
Stop	Release the "Forward" or "Reverse" button.
Forced stop	Click the "Forced stop" button.

Tab. 6-38:
When the check box of "Rotation only while the CCW or CW button is being pushed." is checked.

Operation	Screen control
Forward rotation start	Click the "Forward" button.
Reverse rotation start	Click the "Reverse" button.
Stop	Click the "Stop" button.
Forced stop	Click the "Forced stop" button.

Tab. 6-39:
When the check box of "Rotation only while the CCW or CW button is being pushed." is not checked.

- Positioning operation

Positioning operation can be performed without using the servo system controller. Use this operation with the forced stop reset. This operation may be used independently of whether the servo is on or off and whether the servo system controller is connected or not.
Exercise control on the positioning operation screen of MR Configurator2.

Item	Initial setting	Setting range
Travel distance [pulse]	4000	0 to 99999999
Speed [1/min]	200	0 to max. speed
Acceleration/deceleration time constant [ms]	1000	0 to 50000
Repeat pattern	Fwd. rot. (CCW) to rev. rot. (CW)	Fwd. rot. (CCW) to rev. rot. (CW) Fwd. rot. (CCW) to fwd. rot. (CCW) Rev. rot. (CW) to fwd. rot. (CCW) Rev. rot. (CW) to rev. rot. (CW)
Dwell time [s]	2.0	0.1 to 50.0
Number of operations [times]	1	1 to 9999

Tab. 6-40: *Operation pattern for positioning operation*

Operation	Screen control
Forward rotation start	Click the "Forward" button.
Reverse rotation start	Click the "Reverse" button.
Stop	Click the "Stop" button.
Forced stop	Click the "Forced stop" button.

Tab. 6-41:
Operation method for positioning operation

- Program operation

  Positioning operation can be performed in two or more operation patterns combined, without using the servo system controller. Use this operation with the forced stop reset. This operation may be used independently of whether the servo is on or off and whether the servo system controller is connected or not.
  Exercise control on the program operation screen of MR Configurator2.

Operation	Screen control
Start	Click the "Start" button.
Pause	Click the "Pause" button.
Stop	Click the "Stop" button.
Forced stop	Click the "Forced stop" button.

Tab. 6-42:
Operation method for positioning operation

- Output signal (DO) forced output

  Output signals can be switched on/off forcibly independently of the servo status. Use this function for output signal wiring check, etc. Exercise control on the DO forced output screen of MR Configurator2.

Operation procedure

① Turn off the power.

② Turn "ON (up)" SW1-1.

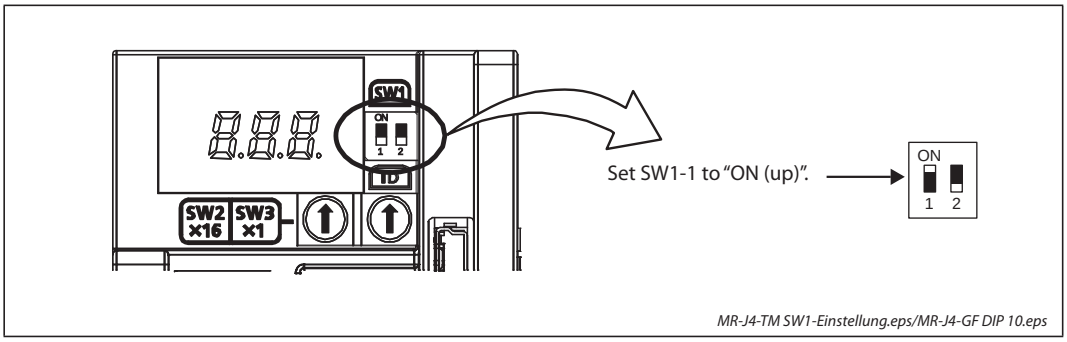

Fig. 6-40: *Setting of SW1-1 for test operation*

Turning "ON (up)" SW1-1 during power-on will not start the test operation mode.

③ Turn on the servo amplifier.
When initialization is completed, the decimal point on the first digit will flicker.

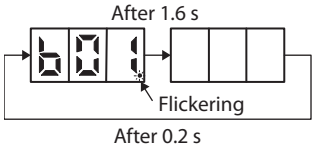

When an alarm or warning also occurs during the test operation, the decimal point on the first digit will flicker as follows.

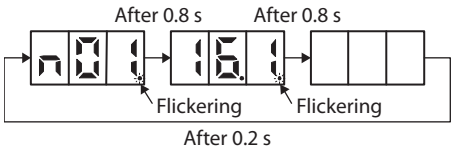

④ Start operation with the personal computer.

6.5.5 Motor-less operation in controller

NOTES

Connect the servo system controller to the servo amplifier before the motor-less operation.

The motor-less operation cannot be used in the fully closed loop control mode, linear servo motor control mode, or DD motor control mode.

Motor-less operation

Without connecting the servo motor to the servo amplifier, output signals or status displays can be provided in response to the servo system controller commands as if the servo motor is actually running. This operation may be used to check the servo system controller sequence. Use this operation with the forced stop reset. Use this operation with the servo amplifier connected to the servo system controller.

To stop the motor-less operation, set the motor-less operation selection to "Disabled (□□□0)" in parameter PC05. When the power supply is turned on next time, motorless operation will be disabled.

●

Load item	Condition
Load torque	0
Load to motor inertia ratio	Pr. PB06 (Load to motor inertia ratio/load to motor mass ratio)

Tab. 6-43:
Load conditions for motor-less operation

● Alarms

The following alarms and warnings do not occur. However, the other alarms and warnings occur as when the servo motor is connected.

- AL. 16 (Encoder initial communication error 1)
- AL. 1E (Encoder initial communication error 2)
- AL. 1F (Encoder initial communication error 3)
- AL. 20 (Encoder normal communication error 1)
- AL. 21 (Encoder normal communication error 2)
- AL. 25 (Absolute position erased)
- AL. 92 (Battery cable disconnection warning)
- AL. 9F (Battery warning)

Operation procedure

① Set the servo amplifier to the servo-off status.

② Set Parameter PC05 to "□□□1", turn "OFF (down: normal condition side)" the test operation mode switch (SW1-1), and then turn on the power supply.

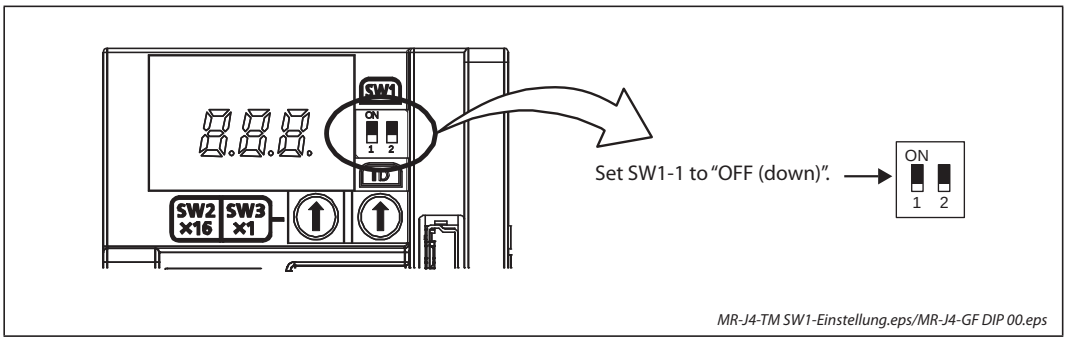

Fig. 6-41: *Setting of SW1-1 for motor-less operation*

③ Start the motor-less operation with the servo system controller.

The display shows the following screen.

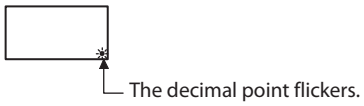

7 Parameters

WARNING:

- ***Never make a drastic adjustment or change to the parameter values as doing so will make the operation unstable.***
- ***If fixed values are written in the digits of a parameter, do not change these values.***
- ***Do not change parameters for manufacturer setting.***
- ***Do not set a value other than the described values to each parameter.***

7.1 MR-J4-A

7.1.1 Basic setting parameters

NOTES

To enable a parameter whose symbol is preceded by *, cycle the power after setting it.

Abbreviations of operation modes indicate the followings.

- Standard: Standard (semi closed loop system) use of the rotary servo motor
- Full.: Fully closed loop system use of the rotary servo motor
- Lin.: Linear servo motor use
- DD: Direct drive (DD) motor use

For MR-J4-03A6(-RJ) servo amplifiers, the operation mode is available only in standard (semi closed loop system).

The symbols in the control mode column mean as follows.

- P: Position control mode
- S: Speed control mode
- T: Torque control mode

For servo amplifier with software version B3 or later, the parameter initial values for the manufacturer setting are partially changed.

Setting an out of range value to each parameter will trigger AL. 37 (Parameter error).

NOTE

The following parameters are not available with MR-J4-03A6 servo amplifiers.

- Pr. PA02 (Regenerative option)
- Pr. PA17 (Servo motor series setting)
- Pr. PA18 (Servo motor type setting)
- Pr. PA26 (Function selection A-5)

Parameters PA□□

No.	Symbol	Name	Initial value	Unit	Operation mode				Control mode		
					Standard	Full.	Lin.	DD	P	S	T
PA01	*STY	Operation mode	1000H	—	✔	✔	✔	✔	✔	✔	✔
PA02	*REG	Regenerative option	0000H	—	✔	✔	✔	✔	✔	✔	✔
PA03	*ABS	Absolute position detection system	0000H	—	✔	✔	✔	✔	✔	—	—
PA04	*AOP1	Function selection A-1	2000H	—	✔	✔	✔	✔	✔	✔	—
PA05	*FBP	Number of command input pulses per revolution	10000	—	✔	✔	✔	✔	✔	—	—
PA06	CMX	Electronic gear numerator (command pulse multiplication numerator)	1	—	✔	✔	✔	✔	✔	—	—
PA07	CDV	Electronic gear denominator (command pulse multiplication denominator)	1	—	✔	✔	✔	✔	✔	—	—
PA08	ATU	Auto tuning mode	0001H	—	✔	✔	✔	✔	✔	✔	—
PA09	RSP	Auto tuning response	16	—	✔	✔	✔	✔	✔	✔	—
PA10	INP	In-position range	100	pulse	✔	✔	✔	✔	✔	—	—
PA11	TLP	Forward rotation torque limit/positive direction thrust limit	100.0	%	✔	✔	✔	✔	✔	✔	✔
PA12	TLN	Reverse rotation torque limit/negative direction thrust limit	100.0	%	✔	✔	✔	✔	✔	✔	✔
PA13	*PLSS	Command pulse input form	0100H	—	✔	✔	✔	✔	✔	—	—
PA14	*POL	Rotation direction selection/travel direction selection	0	—	✔	✔	✔	✔	✔	—	—
PA15	*ENR	Encoder output pulses	4000	pulse/rev	✔	✔	✔	✔	✔	✔	✔
PA16	*ENR2	Encoder output pulses 2	1	—	✔	✔	✔	✔	✔	✔	✔
PA17	*MSR	Servo motor series setting	0000H	—	—	—	✔	—	✔	✔	✔
PA18	*MTY	Servo motor type setting	0000H	—	—	—	✔	—	✔	✔	✔
PA19	*BLK	Parameter writing inhibit	00AAH	—	✔	✔	✔	✔	✔	✔	✔
PA20	*TDS	Tough drive setting	0000H	—	✔	✔	✔	✔	✔	✔	✔
PA21	*AOP3	Function selection A-3	0001H	—	✔	✔	✔	✔	✔	✔	—
PA22	*PCS	Position control composition selection	0000H	—	✔	✔	✔	✔	✔	—	—
PA23	DRAT	Drive recorder arbitrary alarm trigger setting	0000H	—	✔	✔	✔	✔	✔	✔	✔
PA24	AOP4	Function selection A-4	0000H	—	✔	✔	✔	✔	✔	✔	—
PA25	OTHOV	One-touch tuning – Overshoot permissible level	0	%	✔	✔	✔	✔	✔	✔	—
PA26	*AOP5	Function selection A-5	0000H	—	✔	✔	✔	✔	✔	✔	—
PA27	—	For manufacturer setting	0000H	—	—	—	—	—	—	—	—
PA28	—		0000H	—	—	—	—	—	—	—	—
PA29	—		0000H	—	—	—	—	—	—	—	—
PA30	—		0000H	—	—	—	—	—	—	—	—
PA31	—		0000H	—	—	—	—	—	—	—	—
PA32	—		0000H	—	—	—	—	—	—	—	—

Tab. 7-1: *List of basic setting parameters for MR-J4-A*

Description of basic setting parameters

Number	Symbol	Initial value	Unit	Setting range	Control mode
PA01	***STY**	**1000H**		**Refer to text**	**P S T**

Operation mode

1	0		

Control mode selection
0: Position control
1: Position and speed control
2: Speed control
3: Speed and torque control
4: Torque control
5: Torque and position control

Operation mode selection
0: Standard control mode
1: Fully closed loop control mode
4: Linear servo motor control mode
6: DD motor control mode (except 400 V class servo amplifiers)

Setting other than above will trigger AL. 37 (Parameter error). The linear servo system, direct drive servo system and fully closed loop system are available for the MR-J4-□A□(-RJ) servo amplifiers of which software version is A5 or later.

For manufacturer setting
10: Manufacturer setting

PA02	*REG	0000H		Refer to text	P S T

Regenerative option

0	0		

Select the regenerative option.
00: Regenerative option is not used.
- For the servo amplifier of 100 W, a regenerative resistor is not used.
- For the servo amplifier of 0.2 kW to 7 kW, the built-in regenerative resistor is used.
- The supplied regenerative resistor or a regenerative option is used with the servo amplifier of 11 kW to 22 kW.

01: FR-RC-(H)/FR-CV-(H)/FR-BU2-(H)
When you use FR-RC-(H), FR-CV-(H) or FR-BU2-(H), select "Mode 2 (□□□1)" in parameter PC27 (Undervoltage alarm detection mode selection).
02: MR-RB032/MR-RFH75-40
03: MR-RB12/MR-RFH75-40
04: MR-RB32/MR-RFH220-40
05: MR-RB30/MR-RFH400-13
06: MR-RB50 (Cooling fan is required.)/MR-RFH400-13
08: MR-RB31/MR-RFH400-6.7
09: MR-RB51 (Cooling fan is required.)/MR-RFH400-6.7
0B: MR-RB3N/MR-PWR-R T 400-9
0C: MR-RB5N (Cooling fan is required.)/MR-PWR-R T 400-9
80: MR-RB1H-4
81: MR-RB3M-4 (Cooling fan is required.)/MR-PWR-R T 400-120
82: MR-RB3G-4 (Cooling fan is required.)/MR-PWR-R T 600-47
83: MR-RB5G-4 (Cooling fan is required.)/MR-PWR-R T 600-47
84: MR-RB34-4 (Cooling fan is required.)/MR-PWR-R T 600-26
85: MR-RB54-4 (Cooling fan is required.)/MR-PWR-R T 600-26
91: MR-RB3U-4 (Cooling fan is required.)
92: MR-RB5U-4 (Cooling fan is required.)
FA: When the supplied regenerative resistor or a regenerative option used with the servo amplifier of 11 kW to 22 kW is cooled by a cooling fan to increase regenerative ability.

For manufacturer setting
00: Manufacturer setting

Incorrect setting may cause the regenerative option to burn.
If a selected regenerative option is not for use with the servo amplifier, AL. 37 (Parameter error) occurs.

Tab. 7-2: *Detailed overview of parameters PA for MR-J4-A (1)*

Number	Symbol	Initial value	Unit	Setting range	Control mode
PA03	***ABS**	**0000H**		**Refer to text**	**P**

Absolute position detection system

0	0	0	

Absolute position detection system selection
0: Disabled (incremental system)
1: Enabled (absolute position detection system by DIO)
2: Enabled (absolute position detection system by communication)
(available for the software version A3 or later)

For manufacturer setting
000: Manufacturer setting

Set this parameter when using the absolute position detection system in the position control mode.

PA04	***AOP1**	**2000H**		**Refer to text**	**P S**

Function selection A-1

	0	0	0

For manufacturer setting
000: Manufacturer setting

Forced stop deceleration function selection
0: Forced stop deceleration function disabled (with EM1)
2: Forced stop deceleration function enabled (with EM2)

Refer to the following table for details.

Setting value	EM2/EM1	Deceleration method	
		EM2 or EM1 is off	Alarm occurred
0□□□	EM1	MBR (Electromagnetic brake interlock) turns off without the forced stop deceleration.	MBR (Electromagnetic brake interlock) turns off without the forced stop deceleration.
2□□□	EM2	MBR (Electromagnetic brake interlock) turns off after the forced stop deceleration.	MBR (Electromagnetic brake interlock) turns off after the forced stop deceleration.

PA05	***FBP**	**10000**		**1000–1000000**	**P**

Number of command input pulses per revolution

The servo motor rotates based on set command input pulses.
To enable the parameter value, set "Electronic gear selection" to "Number of command input pulses per revolution (1□□□)" in parameter PA21. "1□□□" cannot be set in parameter PA21 in the linear control mode.

Tab. 7-2: *Detailed overview of parameters PA for MR-J4-A (2)*

Number	Symbol	Initial value	Unit	Setting range	Control mode
PA06	**CMX**	**1**		**1–16777215**	**P**

Electronic gear numerator (command pulse multiplication numerator)

Set the numerator of the electronic gear.

To enable the parameter, set "Electronic gear selection" to "Electronic gear (0□□□)" or "J3A electronic gear setting value compatibility mode (2□□□)" in parameter PA21.

The following shows a standard of the setting range of the electronic gear.

$$\frac{1}{10} < \frac{CMX}{CDV} < 4000$$

If the set value is outside this range, noise may be generated during acceleration/deceleration or operation may not be performed at the preset speed and/or acceleration/deceleration time constants.

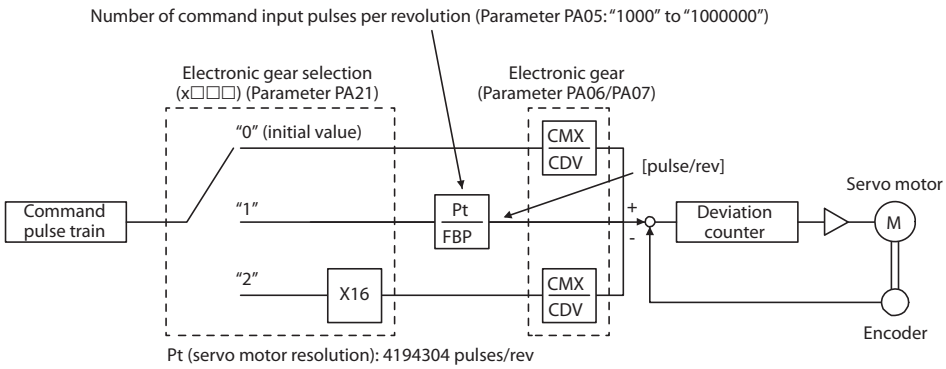

Always set the electronic gear with servo-off state to prevent unexpected operation due to improper setting.

PA07	**CDV**	**1**		**1–16777215**	**P**

Electronic gear denominator (command pulse multiplication denominator)

Set the denominator of the electronic gear.

To enable the parameter, set "Electronic gear selection" to "Electronic gear (0□□□)" or "J3A electronic gear setting value compatibility mode (2□□□)" in parameter PA21.

Tab. 7-2: *Detailed overview of parameters PA for MR-J4-A (3)*

Number	Symbol	Initial value	Unit	Setting range	Control mode
PA08	**ATU**	**0001H**		**Refer to text**	**P S**

Auto tuning mode
Gain adjustment mode selection

0	0	0	

Select the gain adjustment mode.
0: 2 gain adjustment mode 1 (interpolation mode)
1: Auto tuning mode 1
2: Auto tuning mode 2
3: Manual mode
4: 2 gain adjustment mode 2
Refer to the following table for details.

For manufacturer setting
000: Manufacturer setting

Setting value	Gain adjustment mode	Automatically adjusted parameter
□□□0	2 gain adjustment mode 1 (interpolation mode)	PB06 (Load to motor inertia ratio) PB08 (Position loop gain) PB09 (Speed loop gain) PB10 (Speed integral compensation)
□□□1	Auto tuning mode 1	PB06 (Load to motor inertia ratio) PB07 (Model loop gain) PB08 (Position loop gain) PB09 (Speed loop gain) PB10 (Speed integral compensation)
□□□2	Auto tuning mode 2	PB07 (Model loop gain) PB08 (Position loop gain) PB09 (Speed loop gain) PB10 (Speed integral compensation)
□□□3	Manual mode	—
□□□4	2 gain adjustment mode 2	PB08 (Position loop gain) PB09 (Speed loop gain) PB10 (Speed integral compensation)

Tab. 7-2: *Detailed overview of parameters PA for MR-J4-A (4)*

Number	Symbol	Initial value	Unit	Setting range	Control mode
PA09	**RSP**	**16**		**1–40**	**P S**

Auto tuning response

Set a response of the auto tuning.

Setting value	Machine characteristic	
	Response	Guideline for machine resonance frequency [Hz]
1	low	2.7
2		3.6
3		4.9
4		6.6
5		10.0
6		11.3
7		12.7
8		14.3
9		16.1
10		18.1
11		20.4
12		23.0
13		25.9
14		29.2
15		32.9
16		37.0
17		41.7
18		47.0
19		52.9
20	middle	59.6

Setting value	Machine characteristic	
	Response	Guideline for machine resonance frequency [Hz]
21	middle	67.1
22		75.6
23		85.2
24		95.9
25		108.0
26		121.7
27		137.1
28		154.4
29		173.9
30		195.9
31		220.6
32		248.5
33		279.9
34		315.3
35		355.1
36		400.0
37		446.6
38		501.2
39		571.5
40	high	642.7

PA10	**INP**	**100**	**pulse**	**0–65535**	**P**

In-position range

Set an in-position range per command pulse.

To change it to the servo motor encoder pulse unit, set parameter PC24.

PA11	**TLP**	**100.0**	**%**	**0.0–100.0**	**P S T**

Forward rotation torque limit/positive direction thrust limit

You can limit the torque or thrust generated by the servo motor. Set the parameter referring to the instruction manual.

When you output torque or thrust as analog monitor output, the larger value of parameter PA11 (Forward rotation torque limit/positive direction thrust limit value) or PA12 (Reverse rotation torque limit/negative direction thrust limit value) will be the maximum output voltage (8 V).

Set the parameter on the assumption that the maximum torque or thrust is 100.0 [%].

The parameter is for limiting the torque of the servo motor in the CCW power running or CW regeneration, or limiting the thrust of the linear servo motor in the positive direction power running or negative direction regeneration. Set this parameter to "0.0" to generate no torque or thrust.

PA12	**TLN**	**100.0**	**%**	**0.0–100.0**	**P S T**

Reverse rotation torque limit/negative direction thrust limit

You can limit the torque or thrust generated by the servo motor.

When you output torque or thrust with analog monitor output, the larger value of parameter PA11 (Forward rotation torque limit/positive direction thrust limit value) or PA12 (Reverse rotation torque limit/negative direction thrust limit value) will be the maximum output voltage (8 V).

Set the parameter on the assumption that the maximum torque or thrust is 100.0 [%].

The parameter is for limiting the torque of the servo motor in the CCW power running or CW regeneration, or limiting the thrust of the linear servo motor in the positive direction power running or negative direction regeneration. Set this parameter to "0.0" to generate no torque or thrust.

Tab. 7-2: *Detailed overview of parameters PA for MR-J4-A (5)*

Number	Symbol	Initial value	Unit	Setting range	Control mode
PA13	***PLSS**	**0100H**		**Refer to text**	**P**

Command pulse input form

0			

Command input pulse train form selection
0: Forward/reverse rotation pulse train
1: Signed pulse train
2: A-phase/B-phase pulse train (The servo amplifier imports input pulses after multiplying by four.)

Refer to the following table for settings.

Pulse train logic selection
0: Positive logic
1: Negative logic

Refer to the following table for settings.

Command input pulse train filter selection
Selecting proper filter enables to enhance noise immunity.
0: Command input pulse train is 4 Mpulses/s or less.
1: Command input pulse train is 1 Mpulse/s or less.
2: Command input pulse train is 500 kpulses/s or less.
3: Command input pulse train is 200 kpulses/s or less (available for the software version A5 or later)

1 Mpulse/s or lower commands are supported by "1". When inputting commands over 1 Mpulse/s and 4 Mpulses/s or lower, set "0".

Incorrect setting may cause the following malfunctions.
– Setting a value higher than actual command will lower noise immunity.
– Setting a value lower than actual command will cause a position mismatch.

For manufacturer setting
0: Manufacturer setting

Setting value	Pulse train form		Forward rotation (positive direction) command	Reverse rotation (negative direction) command
□□10H	Negative logic	Forward rotation pulse train (positive direction pulse train) Reverse rotation pulse train (negative direction pulse train)	PP NP	
□□11H	Negative logic	Pulse train + sign	PP NP L	H
□□12H	Negative logic	A-phase pulse train B-phase pulse train	PP NP	
□□00H	Positive logic	Forward rotation pulse train (positive direction pulse train) Reverse rotation pulse train (negative direction pulse train)	PP NP	
□□01H	Positive logic	Pulse train + sign	PP NP H	L
□□02H	Positive logic	A-phase pulse train B-phase pulse train	PP NP	

Arrows in the table indicate the timing of importing pulse trains. A-phase and B-phase pulse trains are imported after they have been multiplied by 4.

Tab. 7-2: *Detailed overview of parameters PA for MR-J4-A (6)*

Number	Symbol	Initial value	Unit	Setting range	Control mode
PA14	***POL**	**0**		**0, 1**	**P**

Rotation direction selection/travel direction selection

Select the servo motor rotation direction or linear servo motor travel direction for the input pulse train.

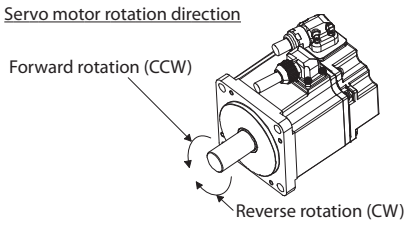

Setting value	Servo motor rotation direction/ linear servo motor travel direction	
	When forward rotation pulse is input	When reverse rotation pulse is input
0	CCW or positive direction	CW or negative direction
1	CW or negative direction	CCW or positive direction

The positive/negative directions of the linear servo motor are as follows.

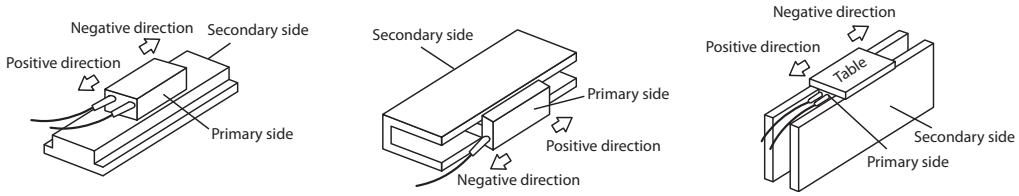

LM-H3/LM-F series LM-U2 series LM-K2 series

PA15	***ENR**	**4000**	**pulse/rev**	**1–4194304**	**P S T**

Encoder output pulses

Set the encoder output pulses from the servo amplifier by using the number of output pulses per revolution, dividing ratio, or electronic gear ratio (after multiplication by 4).

To set a numerator of the electronic gear, select "A-phase/B-phase pulse electronic gear setting (□□3□)" of "Encoder output pulse setting selection" in parameter PC19.

The maximum output frequency is 4.6 Mpulses/s. Set the parameter within this range.

PA16	***ENR2**	**1**		**1–4194304**	**P S T**

Encoder output pulses 2

Set a denominator of the electronic gear for the A/B-phase pulse output.

To set a denominator of the electronic gear, select "A-phase/B-phase pulse electronic gear setting (□□3□)" of "Encoder output pulse setting selection" in parameter PC19.

Tab. 7-2: *Detailed overview of parameters PA for MR-J4-A (7)*

Number	Symbol	Initial value	Unit	Setting range	Control mode
PA17	***MSR**	**0000H**		**Refer to text**	**P S T**

Servo motor series setting
When you use a linear servo motor, select its model from parameters PA17 and PA18. Set this and parameter PA18 at a time.
Refer to the following table for settings.

Linear servo motor series	Servo motor model (primary side)	Parameter setting	
		PA17	PA18
LM-H3	LM-H3P2A-07P-BSS0	00BBH	2101H
	LM-H3P3A-12P-CSS0		3101H
	LM-H3P3B-24P-CSS0		3201H
	LM-H3P3C-36P-CSS0		3301H
	LM-H3P3D-48P-CSS0		3401H
	LM-H3P7A-24P-ASS0		7101H
	LM-H3P7B-48P-ASS0		7201H
	LM-H3P7C-72P-ASS0		7301H
	LM-H3P7D-96P-ASS0		7401H
LM-U2	LM-U2PAB-05M-0SS0	00B4H	A201H
	LM-U2PAD-10M-0SS0		A401H
	LM-U2PAF-15M-0SS0		A601H
	LM-U2PBB-07M-1SS0		B201H
	LM-U2PBD-15M-1SS0		B401H
	LM-U2PBF-22M-1SS0		2601H
	LM-U2P2B-40M-2SS0		2201H
	LM-U2P2C-60M-2SS0		2301H
	LM-U2P2D-80M-2SS0		2401H
LM-F	LM-FP2B-06M-1SS0 ①	00B2H	2201H
	LM-FP2D-12M-1SS0 ①		2401H
	LM-FP2F-18M-1SS0 ①		2601H
	LM-FP4B-12M-1SS0 ①		4201H
	LM-FP4D-24M-1SS0 ①		4401H
	LM-FP4F-36M-1SS0 ①		4601H
	LM-FP4H-48M-1SS0 ①		4801H
	LM-FP5H-60M-1SS0 ①		5801H
	LM-FP2B-06M-1SS0 ②		2202H
	LM-FP2D-12M-1SS0 ②		2402H
	LM-FP2F-18M-1SS0 ②		2602H
	LM-FP4B-12M-1SS0 ②		4202H
	LM-FP4D-24M-1SS0 ②		4402H
	LM-FP4F-36M-1SS0 ②		4602H
	LM-FP4H-48M-1SS0 ②		4802H
	LM-FP5H-60M-1SS0 ②		5802H
LM-K2	LM-K2P1A-01M-2SS1	00B8H	1101H
	LM-K2P1C-03M-2SS1		1301H
	LM-K2P2A-02M-1SS1		2101H
	LM-K2P2C-07M-1SS1		2301H
	LM-K2P2E-12M-1SS1		2501H
	LM-K2P3C-14M-1SS1		3301H
	LM-K2P3E-24M-1SS1		3501H

PA18	*MTY	0000H		Refer to text	P S T

Servo motor type setting
When you use a linear servo motor, select its model from parameter PA17 and PA18.
Set this and parameter PA17 at a time.
Refer to the table of parameter PA17 for settings.

Tab. 7-2: *Detailed overview of parameters PA for MR-J4-A (8)*

① Natural cooling

② Liquid cooling

Number	Symbol	Initial value	Unit	Setting range	Control mode
PA19	***BLK**	**00AAH**		**Refer to text**	**P S T**

Parameter writing inhibit

Select a reference range and writing range of the parameter.

Refer to the following table for settings.

PA19	Setting operation	PA	PB	PC	PD	PE	PF	PL
Other than below	Reading	✔	—	—	—	—	—	—
	Writing	✔	—	—	—	—	—	—
000AH	Reading	Only 19	—	—	—	—	—	—
	Writing	Only 19	—	—	—	—	—	—
000BH	Reading	✔	✔	✔	—	—	—	—
	Writing	✔	✔	✔	—	—	—	—
000CH	Reading	✔	✔	✔	✔	—	—	—
	Writing	✔	✔	✔	✔	—	—	—
00AAH (initial value)	Reading	✔	✔	✔	✔	✔	✔	—
	Writing	✔	✔	✔	✔	✔	✔	—
00ABH	Reading	✔	✔	✔	✔	✔	✔	✔
	Writing	✔	✔	✔	✔	✔	✔	✔
100BH	Reading	✔	—	—	—	—	—	—
	Writing	Only 19	—	—	—	—	—	—
100CH	Reading	✔	✔	✔	✔	—	—	—
	Writing	Only 19	—	—	—	—	—	—
10AAH	Reading	✔	✔	✔	✔	✔	✔	—
	Writing	Only 19	—	—	—	—	—	—
10ABH	Reading	✔	✔	✔	✔	✔	✔	✔
	Writing	Only 19	—	—	—	—	—	—

PA20	***TDS**	**0000H**		**Refer to text**	**P S T**

Tough drive setting

Alarms may not be avoided with the tough drive function depending on the situations of the power supply and load fluctuation.

You can assign MTTR (During tough drive) to the pins CN1-22 to CN1-25 and CN1-49 with parameters PD23 to PD26 and PD28.

For manufacturer setting
0□□0: Manufacturer setting

Vibration tough drive selection
0: Disabled
1: Enabled

Selecting "1" enables to suppress vibrations by automatically changing setting values of parameters PB13 (Machine resonance suppression filter 1) and PB15 (Machine resonance suppression filter 2) in case that the vibration exceed the value of the oscillation level set in parameter PF23.
To output the oscillation detection alarm as a warning, set parameter PF24 (Vibration tough drive function selection).
Refer to the instruction manual for details.

SEMI-F47 function selection
0: Disabled
1: Enabled

Selecting "1" enables to avoid occurring AL. 10 (Undervoltage) using the electrical energy charged in the capacitor in case that an instantaneous power failure occurs during operation. In parameter PF25 (SEMI-F47 function - Instantaneous power failure detection time), set the time period until the occurrence of AL. 10.1 (Voltage drop in the control circuit power).

Tab. 7-2: *Detailed overview of parameters PA for MR-J4-A (9)*

Number	Symbol	Initial value	Unit	Setting range	Control mode
PA21	***AOP3**	**0001H**		**Refer to text**	**P (S)**

Function selection A-3

	0	0	

One-touch tuning function selection
0: Disabled
1: Enabled
When the digit is "0", the one-touch tuning is not available.

For manufacturer setting
00: Manufacturer setting

Electronic gear selection (only position control mode)
0: Electronic gear (Parameters PA06 and PA07)
1: Number of command input pulses per revolution (Parameter PA05)
2: J3A electronic gear setting value compatibility mode (Electronic gear (PA06 and PA07 × 16))
Setting the parameter enables the electronic gear value set in MR-J3-A.

PA22	***PCS**	**0000H**		**Refer to text**	**P**

Position control composition selection

0	0		0

Super trace control selection
0: Disabled
2: Enabled

For manufacturer setting
00□0: Manufacturer setting

This parameter setting is used with servo amplifier with software version B4 or later.

PA23	**DRAT**	**0000H**		**Refer to text**	**P S T**

Drive recorder arbitrary alarm trigger setting

Alarm detail No. setting
Set the digits when you execute the trigger with arbitrary alarm detail No. for the drive recorder function.
When these digits are "0 0", only the arbitrary alarm No. setting will be enabled.

Alarm No. setting
Set the digits when you execute the trigger with arbitrary alarm No. for the drive recorder function.
When "0 0" are set, arbitrary alarm trigger of the drive recorder will be disabled.

Setting example:
To activate the drive recorder when AL. 50 (Overload 1) occurs, set "5 0 0 0".
To activate the drive recorder when AL. 50.3 (Thermal overload error 4 during operation) occurs, set "5 0 0 3".

PA24	**AOP4**	**0000H**		**Refer to text**	**P S**

Function selection A-4

0	0	0	

Vibration suppression mode selection
0: Standard mode
1: 3 inertia mode
2: Low response mode
When you select the standard mode or low response mode, "Vibration suppression control 2" is not available.
When you select the 3 inertia mode, the feed forward gain is not available.
Before changing the control mode during the 3 inertia mode or low response mode, stop the motor.

For manufacturer setting
000: Manufacturer setting

Tab. 7-2: *Detailed overview of parameters PA for MR-J4-A (10)*

Number	Symbol	Initial value	Unit	Setting range	Control mode
PA25	**OTHOV**	**0**	**%**	**Refer to text**	**P S**
One-touch tuning -Overshoot permissible level Set a permissible value of overshoot amount for one-touch tuning as a percentage of the in-position range. Setting "0" will be 50%.					
PA26	***AOP5**	**0000H**		**Refer to text**	**P S**
Function selection A-5 0 0 0 □ Torque limit function selection at instantaneous power failure (instantaneous power failure tough drive selection) 0: Disabled 1: Enabled When an instantaneous power failure occurs during operation, the torque at acceleration is limited to save electric energy charged in the capacitor in the servo amplifier and the time until AL. 10.2 (Voltage drop in the main circuit power) occurs is extended with the instantaneous power failure tough drive function. Consequently, you can set a longer time in parameter PF25 (SEMI-F47 function - Instantaneous power failure detection time). The torque limit function at instantaneous power failure is enabled when "SEMI-F47 function selection" in parameter PA20 is "Enabled (□1□□)". This parameter setting is used with servo amplifier with software version A6 or later. For manufacturer setting 000: Manufacturer setting					

Tab. 7-2: *Detailed overview of parameters PA for MR-J4-A (11)*

7.2 MR-J4-A-RJ

7.2.1 Basic setting parameters

NOTES

To enable a parameter whose symbol is preceded by *, cycle the power after setting it.

Abbreviations of operation modes indicate the followings.

- Standard: Standard (semi closed loop system) use of the rotary servo motor
- Full.: Fully closed loop system use of the rotary servo motor
- Lin.: Linear servo motor use
- DD: Direct drive (DD) motor use

For MR-J4-03A6-RJ servo amplifiers, the operation mode is available only in standard (semi closed loop system).

The symbols in the control mode column mean as follows.

- CP: Positioning mode (point table method)
- BCD: Positioning mode (point table method in the BCD input positioning operation)
  This method is available only when the MR-D01 unit is connected.
  Refer to the instruction manual (positioning mode) for details.
- CL: Positioning mode (program method)
- PS: Positioning mode (indexer method)

Setting a value out of the setting range in each parameter will trigger AL. 37 (Parameter error).

NOTES

To enable the following parameters in a positioning mode, cycle the power after setting.

- Pr. PA06 (Electronic gear numerator (command pulse multiplication numerator)/Number of gear teeth on machine side)
- Pr. PA07 (Electronic gear denominator (command pulse multiplication denominator)/Number of gear teeth on servo motor side)

The following parameter cannot be used in the positioning mode.

- Pr. PA05 (Number of command input pulses per revolution)

The following parameters are not available with MR-J4-03A6-RJ servo amplifiers.

- Pr. PA02 (Regenerative option)
- Pr. PA17 (Servo motor series setting)
- Pr. PA18 (Servo motor type setting)
- Pr. PA26 (Function selection A-5)

Parameters PA□□

No.	Symbol	Name	Initial value	Unit	Operation mode				Control mode		
					Standard	Full.	Lin.	DD	CP/BCD	CL	PS
PA01	*STY	Operation mode	1000H	—	✔	✔	✔	✔	✔	✔	✔
PA02	*REG	Regenerative option	0000H	—	✔	✔	✔	✔	✔	✔	✔
PA03	*ABS	Absolute position detection system	0000H	—	✔	✔	✔	✔	✔	✔	✔
PA04	*AOP1	Function selection A-1	2000H	—	✔	✔	✔	✔	✔	✔	✔
PA05	*FBP	Number of command input pulses per revolution	10000	—	—	—	—	—	—	—	—
PA06	*CMX	Electronic gear numerator (command pulse multiplication numerator)	1	—	✔	✔	✔	✔	✔	✔	—
		Number of gear teeth on machine side	1	—	✔	—	—	✔	—	—	✔
PA07	*CDV	Electronic gear denominator (command pulse multiplication denominator)	1	—	✔	✔	✔	✔	✔	✔	—
		Number of gear teeth on servo motor side	1	—	✔	—	—	✔	—	—	✔
PA08	ATU	Auto tuning mode	0001H	—	✔	✔	✔	✔	✔	✔	✔
PA09	RSP	Auto tuning response	16	—	✔	✔	✔	✔	✔	✔	✔
PA10	INP	In-position range	100	µm 10^{-4} inch 10^{-3} degree pulse	✔	✔	✔	✔	✔	✔	✔
PA11	TLP	Forward rotation torque limit/positive direction thrust limit	100.0	%	✔	✔	✔	✔	✔	✔	✔
PA12	TLN	Reverse rotation torque limit/negative direction thrust limit	100.0	%	✔	✔	✔	✔	✔	✔	✔
PA13	*PLSS	Command pulse input form	0100H	—	✔	✔	✔	✔	✔	✔	✔
PA14	*POL	Rotation direction selection/travel direction selection	0	—	✔	✔	✔	✔	✔	✔	✔
PA15	*ENR	Encoder output pulses	4000	pulse/rev	✔	✔	✔	✔	✔	✔	✔
PA16	*ENR2	Encoder output pulses 2	1	—	✔	✔	✔	✔	✔	✔	✔
PA17	*MSR	Servo motor series setting	0000H	—	—	—	✔	—	✔	✔	✔
PA18	*MTY	Servo motor type setting	0000H	—	—	—	✔	—	✔	✔	✔
PA19	*BLK	Parameter writing inhibit	00AAH	—	✔	✔	✔	✔	✔	✔	✔
PA20	*TDS	Tough drive setting	0000H	—	✔	✔	✔	✔	✔	✔	✔
PA21	*AOP3	Function selection A-3	0001H	—	✔	✔	✔	✔	✔	✔	—
PA22	*PCS	Position control composition selection	0000H	—	✔	✔	✔	✔	✔	✔	✔
PA23	DRAT	Drive recorder arbitrary alarm trigger setting	0000H	—	✔	✔	✔	✔	✔	✔	✔
PA24	AOP4	Function selection A-4	0000H	—	✔	✔	✔	✔	✔	✔	✔
PA25	OTHOV	One-touch tuning - Overshoot permissible level	0	%	✔	✔	✔	✔	✔	✔	✔
PA26	*AOP5	Function selection A-5	0000H	—	✔	✔	✔	✔	✔	✔	✔
PA27	—	For manufacturer setting	0000H	—	—	—	—	—	—	—	—
PA28	—		0000H	—	—	—	—	—	—	—	—
PA29	—		0000H	—	—	—	—	—	—	—	—
PA30	—		0000H	—	—	—	—	—	—	—	—
PA31	—		0000H	—	—	—	—	—	—	—	—
PA32	—		0000H	—	—	—	—	—	—	—	—

Tab. 7-3: *List of basic setting parameters for MR-J4-A-RJ*

Description of basic setting parameters

Number	Symbol	Initial value	Unit	Setting range	Control mode
PA01	***STY**	**1000H**		**Refer to text**	**CP/BCD CL PS**

Operation mode

1	0		

Control mode selection
0 to
5: Not used for positioning mode.
6: Positioning mode (point table method)
7: Positioning mode (program method)
8: Positioning mode (indexer method)

Operation mode selection
0: Standard control mode
1: Fully closed loop control mode
4: Linear servo motor control mode
6: DD motor control mode (except 400 V class servo amplifiers)

The following settings will trigger AL. 37 (Parameter error).
- A value is set other than "0", "1", "4", and "6" to this digit.
- "1" or "4" is set to this digit with the indexer method.
- "1" or "4" is set to this digit when "Position data unit" is set to [degree] in Parameter PT01.

For manufacturer setting
10: Manufacturer setting

PA02	*REG	0000H		Refer to text	CP/BCD CL PS

Regenerative option

0	0		

Select the regenerative option.
00: Regenerative option is not used.
- For the servo amplifier of 100 W, a regenerative resistor is not used.
- For the servo amplifier of 0.2 kW to 7 kW, the built-in regenerative resistor is used.
- The supplied regenerative resistor or a regenerative option is used with the servo amplifier of 11 kW to 22 kW.

01: FR-RC-(H)/FR-CV-(H)/FR-BU2-(H)
When you use FR-RC-(H), FR-CV-(H) or FR-BU2-(H), select "Mode 2 (□□□1)" in parameter PC27 (Undervoltage alarm detection mode selection).
02: MR-RB032/MR-RFH75-40
03: MR-RB12/MR-RFH75-40
04: MR-RB32/MR-RFH220-40
05: MR-RB30/MR-RFH400-13
06: MR-RB50 (Cooling fan is required.)/MR-RFH400-13
08: MR-RB31/MR-RFH400-6.7
09: MR-RB51 (Cooling fan is required.)/MR-RFH400-6.7
0B: MR-RB3N/MR-PWR-R T 400-9
0C: MR-RB5N (Cooling fan is required.)/MR-PWR-R T 400-9
80: MR-RB1H-4
81: MR-RB3M-4 (Cooling fan is required.)/MR-PWR-R T 400-120
82: MR-RB3G-4 (Cooling fan is required.)/MR-PWR-R T 600-47
83: MR-RB5G-4 (Cooling fan is required.)/MR-PWR-R T 600-47
84: MR-RB34-4 (Cooling fan is required.)/MR-PWR-R T 600-26
85: MR-RB54-4 (Cooling fan is required.)/MR-PWR-R T 600-26
91: MR-RB3U-4 (Cooling fan is required.)
92: MR-RB5U-4 (Cooling fan is required.)
FA: When the supplied regenerative resistor or a regenerative option used with the servo amplifier of 11 kW to 22 kW is cooled by a cooling fan to increase regenerative ability.

For manufacturer setting
00: Manufacturer setting

Incorrect setting may cause the regenerative option to burn.
If a selected regenerative option is not for use with the servo amplifier, AL. 37 (Parameter error) occurs.

Tab. 7-4: *Detailed overview of parameters PA for MR-J4-A-RJ (1)*

Number	Symbol	Initial value	Unit	Setting range	Control mode
PA03	***ABS**	**0000H**		**Refer to text**	**CP/BCD CL PS**

Absolute position detection system

0	0	0	

Absolute position detection system selection
0: Disabled (incremental system)
1: Enabled (absolute position detection system)
2: Not used for positioning mode.

For manufacturer setting
000: Manufacturer setting

Setting a value other than "0" and "1" will trigger AL. 37 (Parameter error).

PA04	*AOP1	2000H		Refer to text	CP/BCD CL PS

Function selection A-1

	0	0	0

For manufacturer setting
000: Manufacturer setting

Forced stop deceleration function selection
0: Forced stop deceleration function disabled (with EM1)
2: Forced stop deceleration function enabled (with EM2)

Refer to the following table for details.

Setting value	EM2/EM1	Deceleration method	
		EM2 or EM1 is off	Alarm occurred
0□□□	EM1	MBR (Electromagnetic brake interlock) turns off without the forced stop deceleration.	MBR (Electromagnetic brake interlock) turns off without the forced stop deceleration.
2□□□	EM2	MBR (Electromagnetic brake interlock) turns off after the forced stop deceleration.	MBR (Electromagnetic brake interlock) turns off after the forced stop deceleration.

PA05	*FBP	10000		1000–1000000	P

Number of command input pulses per revolution

The servo motor rotates based on set command input pulses.
To enable the parameter value, set "Electronic gear selection" to "Number of command input pulses per revolution (1□□□)" in parameter PA21. "1□□□" cannot be set in parameter PA21 in the linear control mode.

Tab. 7-4: *Detailed overview of parameters PA for MR-J4-A-RJ (2)*

Number	Symbol	Initial value	Unit	Setting range	Control mode
PA06	***CMX**	**1**		**1–16777215**	**CP/BCD CL**

Electronic gear numerator (command pulse multiplication numerator)
Set an electronic gear numerator. (Refer to the instruction manual.)
To enable the parameter values in the positioning mode, cycle the power after setting.
To enable the parameter, select "Electronic gear (0□□□)", "J3 electronic gear setting value compatibility mode (2□□□)", or "J2S electronic gear setting value compatibility mode (3□□□)" of "Electronic gear selection" in parameter PA21.
Set the electronic gear within the following range. Setting out of the range will trigger AL. 37 (Parameter error).

Parameter PA21	Electronic gear setting range
0□□□	(1/865) < (CMX/CDV) < 271471
2□□□	(1/13825) < (CMX/CDV) < 16967
3□□□	(1/27649) < (CMX/CDV) < 8484

PA06	***CMX**	**1**		**1–16777215**	**PS**

Number of gear teeth on machine side
Set the number of gear teeth on machine side. (Refer to the instruction manual.)
To enable the parameter values in the positioning mode, cycle the power after setting.
Set the electronic gear within the following range.
① $1 \leq CMX \leq 16384$, $1 \leq CDV \leq 16384$

② $\frac{1}{9999} \leq \frac{CMX}{CDV} \leq 9999$

③ CDV x STN ≤ 32767 (STN: Number of stations per rotation (parameter PT28))
④ CMX x CDV ≤ 100000
Setting out of the range will trigger AL. 37 (Parameter error).
When a small value is set to the electronic gear ratio with the manual operation mode, the servo motor may not drive at the set servo motor speed.

$$\text{Travel distance of 1 station} = \text{Pt (servo motor resolution)} \times \frac{1}{STN} \times \frac{CMX}{CDV}$$

PA07	***CDV**	**1**		**1–16777215**	**CP/BCD CL**

Electronic gear denominator (command pulse multiplication denominator)
Set an electronic gear denominator. (Refer to the instruction manual.)
To enable the parameter values in the positioning mode, cycle the power after setting.
To enable the parameter, select "Electronic gear (0□□□)", "J3 electronic gear setting value compatibility mode (2□□□)", or "J2S electronic gear setting value compatibility mode (3□□□))" of "Electronic gear selection" in parameter PA21.
Set the electronic gear within the range of parameter PA06. Setting out of the range will trigger AL. 37 (Parameter error).

PA07	***CDV**	**1**		**1–16777215**	**PS**

Number of gear teeth on servo motor side
Set the number of gear teeth on servo motor side. (Refer to the instruction manual.)
To enable the parameter values in the positioning mode, cycle the power after setting.
Set the electronic gear within the range of parameter PA06. Setting out of the range will trigger AL. 37 (Parameter error).

Tab. 7-4: *Detailed overview of parameters PA for MR-J4-A-RJ (3)*

Number	Symbol	Initial value	Unit	Setting range	Control mode
PA08	**ATU**	**0001H**		**Refer to text**	**CP/BCD CL PS**

Auto tuning mode
Gain adjustment mode selection

0	0	0	

Select the gain adjustment mode.
0: 2 gain adjustment mode 1 (interpolation mode)
1: Auto tuning mode 1
2: Auto tuning mode 2
3: Manual mode
4: 2 gain adjustment mode 2
Refer to the following table for details.

For manufacturer setting
000: Manufacturer setting

Setting value	Gain adjustment mode	Automatically adjusted parameter
□□□0	2 gain adjustment mode 1 (interpolation mode)	PB06 (Load to motor inertia ratio) PB08 (Position loop gain) PB09 (Speed loop gain) PB10 (Speed integral compensation)
□□□1	Auto tuning mode 1	PB06 (Load to motor inertia ratio) PB07 (Model loop gain) PB08 (Position loop gain) PB09 (Speed loop gain) PB10 (Speed integral compensation)
□□□2	Auto tuning mode 2	PB07 (Model loop gain) PB08 (Position loop gain) PB09 (Speed loop gain) PB10 (Speed integral compensation)
□□□3	Manual mode	—
□□□4	2 gain adjustment mode 2	PB08 (Position loop gain) PB09 (Speed loop gain) PB10 (Speed integral compensation)

Tab. 7-4: *Detailed overview of parameters PA for MR-J4-A-RJ (4)*

Number	Symbol	Initial value	Unit	Setting range	Control mode
PA09	**RSP**	**16**		**1–40**	**CP/BCD CL PS**

Auto tuning response
Set a response of the auto tuning.

Setting value	Machine characteristic		Setting value	Machine characteristic	
	Response	Guideline for machine resonance frequency [Hz]		Response	Guideline for machine resonance frequency [Hz]
1	low	2.7	21	middle	67.1
2		3.6	22		75.6
3		4.9	23		85.2
4		6.6	24		95.9
5		10.0	25		108.0
6		11.3	26		121.7
7		12.7	27		137.1
8		14.3	28		154.4
9		16.1	29		173.9
10		18.1	30		195.9
11		20.4	31		220.6
12		23.0	32		248.5
13		25.9	33		279.9
14		29.2	34		315.3
15		32.9	35		355.1
16		37.0	36		400.0
17		41.7	37		446.6
18		47.0	38		501.2
19		52.9	39		571.5
20	middle	59.6	40	high	642.7

PA10	**INP**	**100**	**Refer to text**	**0–65535**	**CP/BCD CL PS**

In-position range
Set an in-position range per command.
To change it to the servo motor encoder pulse unit, set parameter PC24.

Parameter PA01	In-position setting range
□□□6 (positioning mode (point table method))	The range where MEND (Travel completion), PED (Position end) and INP (In-position) are input.
□□□7 (Positioning mode (program method))	
□□□8 (Positioning mode (indexer method))	The range where MEND (Travel completion) and INP (In-position) are input.

The unit will be as follows depending on the positioning mode.

- Point table method or program method
  Select from [µm], 10^{-4} [inch], 10^{-3} [degree], or [pulse] with parameter PT01.
- Indexer method
  Command unit [pulse] (a load-side rotation expressed by the number of encoder resolution pulses)

For example, when making an in-position range "± 1 degree" for the rotation angle on the load side, set 4194304 x (1/360) = 11650 pulses.

Tab. 7-4: *Detailed overview of parameters PA for MR-J4-A-RJ (5)*

Number	Symbol	Initial value	Unit	Setting range	Control mode
PA11	**TLP**	**100.0**	**%**	**0.0–100.0**	**CP/BCD CL PS**

Forward rotation torque limit/positive direction thrust limit

You can limit the torque or thrust generated by the servo motor. Set the parameter referring to the instruction manual.

When you output torque or thrust as analog monitor output, the larger value of parameter PA11 (Forward rotation torque limit/positive direction thrust limit value) or PA12 (Reverse rotation torque limit/negative direction thrust limit value) will be the maximum output voltage (8 V).

Set the parameter on the assumption that the maximum torque or thrust is 100.0 [%].

The parameter is for limiting the torque of the servo motor in the CCW power running or CW regeneration, or limiting the thrust of the linear servo motor in the positive direction power running or negative direction regeneration. Set this parameter to "0.0" to generate no torque or thrust.

PA12	**TLN**	**100.0**	**%**	**0.0–100.0**	**CP/BCD CL PS**

Reverse rotation torque limit/negative direction thrust limit

You can limit the torque or thrust generated by the servo motor. Set the parameter referring to the instruction manual.

When you output torque or thrust with analog monitor output, the larger value of parameter PA11 (Forward rotation torque limit/positive direction thrust limit value) or PA12 (Reverse rotation torque limit/negative direction thrust limit value) will be the maximum output voltage (8 V).

Set the parameter on the assumption that the maximum torque or thrust is 100.0 [%].

The parameter is for limiting the torque of the servo motor in the CW power running or CCW regeneration, or limiting the thrust of the linear servo motor in the positive direction power running or negative direction regeneration. Set this parameter to "0.0" to generate no torque or thrust.

PA13	***PLSS**	**0100H**		**Refer to text**	**CP/BCD CL**

Command pulse input form

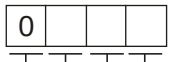

Command input pulse train form selection
0: Forward/reverse rotation pulse train
1: Signed pulse train
2: A-phase/B-phase pulse train (The servo amplifier imports input pulses after multiplying by four.)

When connecting the manual pulse generator MR-HDP01 in the positioning mode, set "2" to this digit.

Refer to the following table on the next page for settings.

Pulse train logic selection
0: Positive logic
1: Negative logic

Select the same one as logic of command pulse train from controller to connect.
Refer to the instruction manual for logic of Q series/L series/F series.

When connecting the manual pulse generator MR-HDP01 in the positioning mode, set "0" to this digit.

Refer to the following table on the next page for settings.

Refer to the following page for the setting of these digits.

Tab. 7-4: *Detailed overview of parameters PA for MR-J4-A-RJ (6)*

Number	Symbol	Initial value	Unit	Setting range	Control mode
PA13	***PLSS**	**0100H**		**Refer to text**	**CP/BCD CL**

Command pulse input form

0			

Refer to the previous page for the setting of these digits.

Command input pulse train filter selection
Selecting proper filter enables to enhance noise immunity.
0: Command input pulse train is 4 Mpulses/s or less.
1: Command input pulse train is 1 Mpulse/s or less.
2: Command input pulse train is 500 kpulses/s or less.
3: Command input pulse train is 200 kpulses/s or less (available for the software version A5 or later)

1 Mpulse/s or lower commands are supported by "1". When inputting commands over 1 Mpulse/s and 4 Mpulses/s or lower, set "0".

When connecting the manual pulse generator MR-HDP01 in the positioning mode, set "2" or "3" to this digit.

Incorrect setting may cause the following malfunctions.
– Setting a value higher than actual command will lower noise immunity.
– Setting a value lower than actual command will cause a position mismatch.

For manufacturer setting
0: Manufacturer setting

Setting value	Pulse train form		Forward rotation (positive direction) command	Reverse rotation (negative direction) command
□□10H	Negative logic	Forward rotation pulse train (positive direction pulse train) Reverse rotation pulse train (negative direction pulse train)	PP NP	
□□11H	Negative logic	Pulse train + sign	PP NP L	H
□□12H	Negative logic	A-phase pulse train B-phase pulse train	PP NP	
□□00H	Positive logic	Forward rotation pulse train (positive direction pulse train) Reverse rotation pulse train (negative direction pulse train)	PP NP	
□□01H	Positive logic	Pulse train + sign	PP NP H	L
□□02H	Positive logic	A-phase pulse train B-phase pulse train	PP NP	

Arrows in the table indicate the timing of importing pulse trains. A-phase and B-phase pulse trains are imported after they have been multiplied by 4.

When connecting the manual pulse generator MR-HDP01 in the positioning mode, set "□□02H".

Tab. 7-4: *Detailed overview of parameters PA for MR-J4-A-RJ (7)*

Number	Symbol	Initial value	Unit	Setting range	Control mode
PA14	***POL**	**0**		**0, 1**	**CP/BCD CL PS**

Rotation direction selection/travel direction selection

Select a rotation direction of the servo motor or travel direction of the linear servo motor for when turning on ST1 (Forward rotation start) or ST2 (Reverse rotation start).

Servo motor rotation direction

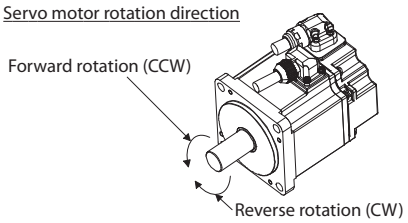

Setting value	Servo motor rotation direction/ linear servo motor travel direction	
	When positioning address increases	**When positioning address decreases**
0	CCW or positive direction	CW or negative direction
1	CW or negative direction	CCW or positive direction

The positive/negative directions of the linear servo motor are as follows.

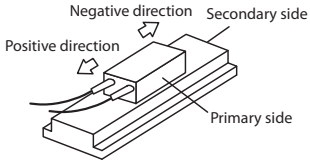

LM-H3/LM-F series

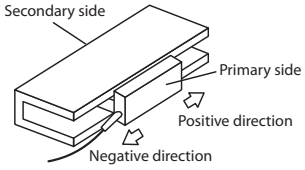

LM-U2 series

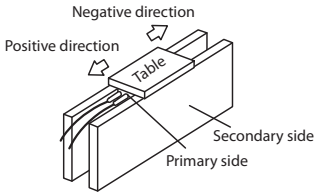

LM-K2 series

PA15	***ENR**	**4000**	**pulse/rev**	**1–4194304**	**CP/BCD CL PS**

Encoder output pulses

Set the encoder output pulses from the servo amplifier by using the number of output pulses per revolution, dividing ratio, or electronic gear ratio (after multiplication by 4).

To set a numerator of the electronic gear, select "A-phase/B-phase pulse electronic gear setting (□□3□)" of "Encoder output pulse setting selection" in parameter PC19.

The maximum output frequency is 4.6 Mpulses/s. Set the parameter within this range.

PA16	***ENR2**	**1**		**1–4194304**	**CP/BCD CL PS**

Encoder output pulses 2

Set a denominator of the electronic gear for the A/B-phase pulse output.

To set a denominator of the electronic gear, select "A-phase/B-phase pulse electronic gear setting (□□3□)" of "Encoder output pulse setting selection" in parameter PC19.

Tab. 7-4: *Detailed overview of parameters PA for MR-J4-A-RJ (8)*

Number	Symbol	Initial value	Unit	Setting range	Control mode
PA17	***MSR**	**0000H**		**Refer to text**	**CP/BCD CL**

Servo motor series setting

When you use a linear servo motor, select its model from parameters PA17 and PA18. Set this and parameter PA18 at a time.

Refer to the following table for settings.

Linear servo motor series	Servo motor model (primary side)	Parameter setting	
		PA17	PA18
LM-H3	LM-H3P2A-07P-BSS0	00BBH	2101H
	LM-H3P3A-12P-CSS0		3101H
	LM-H3P3B-24P-CSS0		3201H
	LM-H3P3C-36P-CSS0		3301H
	LM-H3P3D-48P-CSS0		3401H
	LM-H3P7A-24P-ASS0		7101H
	LM-H3P7B-48P-ASS0		7201H
	LM-H3P7C-72P-ASS0		7301H
	LM-H3P7D-96P-ASS0		7401H
LM-U2	LM-U2PAB-05M-0SS0	00B4H	A201H
	LM-U2PAD-10M-0SS0		A401H
	LM-U2PAF-15M-0SS0		A601H
	LM-U2PBB-07M-1SS0		B201H
	LM-U2PBD-15M-1SS0		B401H
	LM-U2PBF-22M-1SS0		2601H
	LM-U2P2B-40M-2SS0		2201H
	LM-U2P2C-60M-2SS0		2301H
	LM-U2P2D-80M-2SS0		2401H
LM-F	LM-FP2B-06M-1SS0 ①	00B2H	2201H
	LM-FP2D-12M-1SS0 ①		2401H
	LM-FP2F-18M-1SS0 ①		2601H
	LM-FP4B-12M-1SS0 ①		4201H
	LM-FP4D-24M-1SS0 ①		4401H
	LM-FP4F-36M-1SS0 ①		4601H
	LM-FP4H-48M-1SS0 ①		4801H
	LM-FP5H-60M-1SS0 ①		5801H
	LM-FP2B-06M-1SS0 ②		2202H
	LM-FP2D-12M-1SS0 ②		2402H
	LM-FP2F-18M-1SS0 ②		2602H
	LM-FP4B-12M-1SS0 ②		4202H
	LM-FP4D-24M-1SS0 ②		4402H
	LM-FP4F-36M-1SS0 ②		4602H
	LM-FP4H-48M-1SS0 ②		4802H
	LM-FP5H-60M-1SS0 ②		5802H
LM-K2	LM-K2P1A-01M-2SS1	00B8H	1101H
	LM-K2P1C-03M-2SS1		1301H
	LM-K2P2A-02M-1SS1		2101H
	LM-K2P2C-07M-1SS1		2301H
	LM-K2P2E-12M-1SS1		2501H
	LM-K2P3C-14M-1SS1		3301H
	LM-K2P3E-24M-1SS1		3501H

PA18	*MTY	0000H		Refer to text	CP/BCD CL

Servo motor type setting

When you use a linear servo motor, select its model from parameter PA17 and PA18.
Set this and parameter PA17 at a time.

Refer to the table of parameter PA17 for settings.

Tab. 7-4: *Detailed overview of parameters PA for MR-J4-A-RJ (9)*

① Natural cooling

② Liquid cooling

Number	Symbol	Initial value	Unit	Setting range	Control mode
PA19	***BLK**	**00AAH**		**Refer to text**	**CP/BCD CL PS**

Parameter writing inhibit

Select a reference range and writing range of the parameter.

Refer to the following table for settings.

PA19	Setting operation	PA	PB	PC	PD	PE	PF	PL	Po	PT
Other than below	Reading	✔	—	—	—	—	—	—	—	—
	Writing	✔	—	—	—	—	—	—	—	—
000AH	Reading	Only 19	—	—	—	—	—	—	—	—
	Writing	Only 19	—	—	—	—	—	—	—	—
000BH	Reading	✔	✔	✔	—	—	—	—	—	—
	Writing	✔	✔	✔	—	—	—	—	—	—
000CH	Reading	✔	✔	✔	✔	—	—	—	—	—
	Writing	✔	✔	✔	✔	—	—	—	—	—
00AAH (initial value)	Reading	✔	✔	✔	✔	✔	✔	—	—	—
	Writing	✔	✔	✔	✔	✔	✔	—	—	—
00ABH	Reading	✔	✔	✔	✔	✔	✔	✔	✔	✔
	Writing	✔	✔	✔	✔	✔	✔	✔	✔	✔
100BH	Reading	✔	—	—	—	—	—	—	—	—
	Writing	Only 19	—	—	—	—	—	—	—	—
100CH	Reading	✔	✔	✔	✔	—	—	—	—	—
	Writing	Only 19	—	—	—	—	—	—	—	—
10AAH	Reading	✔	✔	✔	✔	✔	✔	—	—	—
	Writing	Only 19	—	—	—	—	—	—	—	—
10ABH	Reading	✔	✔	✔	✔	✔	✔	✔	✔	✔
	Writing	Only 19	—	—	—	—	—	—	—	—

PA20	*TDS	0000H		Refer to text	CP/BCD CL PS

Tough drive setting

Alarms may not be avoided with the tough drive function depending on the situations of the power supply and load fluctuation.

You can assign MTTR (During tough drive) to the pins CN1-13, CN1-14, CN1-22 to CN1-25, and CN1-49 with parameters PD23 to PD26, PD28, and PD47. For MR-J4-03A6-RJ servo amplifiers, MTTR (During tough drive) cannot be assigned.

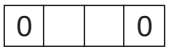

For manufacturer setting
0□□0: Manufacturer setting

Vibration tough drive selection
0: Disabled
1: Enabled

Selecting "1" enables to suppress vibrations by automatically changing setting values of parameters PB13 (Machine resonance suppression filter 1) and PB15 (Machine resonance suppression filter 2) in case that the vibration exceed the value of the oscillation level set in parameter PF23.
To output the oscillation detection alarm as a warning, set parameter PF24 (Vibration tough drive function selection).
Refer to the instruction manual for details.

SEMI-F47 function selection
0: Disabled
1: Enabled

Selecting "1" enables to avoid occurring AL. 10 (Undervoltage) using the electrical energy charged in the capacitor in case that an instantaneous power failure occurs during operation. In parameter PF25 (SEMI-F47 function - Instantaneous power failure detection time), set the time period until the occurrence of AL. 10.1 (Voltage drop in the control circuit power).

Tab. 7-4: *Detailed overview of parameters PA for MR-J4-A-RJ (10)*

Number	Symbol	Initial value	Unit	Setting range	Control mode
PA21	***AOP3**	**0001H**		**Refer to text**	**CP/BCD CL PS**

Function selection A-3

	0	0	

One-touch tuning function selection
0: Disabled
1: Enabled
When the digit is "0", the one-touch tuning is not available.

For manufacturer setting
00: Manufacturer setting

Electronic gear selection
When this digit is changed, the home position will be changed. Execute the home position return again.
0: Electronic gear (parameters PA06 and PA07)
1: Not used for positioning mode. Setting this will trigger AL. 37 (Parameter error).
2: J3 electronic gear setting value compatibility mode
(Electronic gear (PA06 and PA07 × 16))
The electronic gear setting value can be used set with MR-J3.
3: J2S electronic gear setting value compatibility mode
(Electronic gear (PA06 and PA07 × 32)
The electronic gear setting value can be used set with MR-J2S.

PA22	***PCS**	**0000H**		**Refer to text**	**CP/BCD CL PS**

Position control composition selection

0	0		0

Super trace control selection
0: Disabled
2: Enabled

For manufacturer setting
00□0: Manufacturer setting

This parameter setting is used with servo amplifier with software version B4 or later.

PA23	**DRAT**	**0000H**		**Refer to text**	**CP/BCD CL PS**

Drive recorder arbitrary alarm trigger setting

Alarm detail No. setting
Set the digits when you execute the trigger with arbitrary alarm detail No. for the drive recorder function.
When these digits are "0 0", only the arbitrary alarm No. setting will be enabled.

Alarm No. setting
Set the digits when you execute the trigger with arbitrary alarm No. for the drive recorder function.
When "0 0" are set, arbitrary alarm trigger of the drive recorder will be disabled.

Setting example:
To activate the drive recorder when AL. 50 (Overload 1) occurs, set "5 0 0 0".
To activate the drive recorder when AL. 50.3 (Thermal overload error 4 during operation) occurs, set "5 0 0 3".

Tab. 7-4: *Detailed overview of parameters PA for MR-J4-A-RJ (11)*

Number	Symbol	Initial value	Unit	Setting range	Control mode
PA24	**AOP4**	**0000H**		**Refer to text**	**CP/BCD CL PS**

Function selection A-4

0	0	0	

Vibration suppression mode selection
0: Standard mode
1: 3 inertia mode
2: Low response mode

When you select the standard mode or low response mode, "Vibration suppression control 2" is not available.

When you select the 3 inertia mode, the feed forward gain is not available.

Before changing the control mode during the 3 inertia mode or low response mode, stop the motor.

For manufacturer setting
000: Manufacturer setting

PA25	**OTHOV**	**0**	**%**	**Refer to text**	**CP/BCD CL PS**

One-touch tuning -Overshoot permissible level

Set a permissible value of overshoot amount for one-touch tuning as a percentage of the in-position range.
Setting "0" will be 50%.

PA26	***AOP5**	**0000H**		**Refer to text**	**CP/BCD CL PS**

Function selection A-5

0	0	0	

Torque limit function selection at instantaneous power failure (instantaneous power failure tough drive selection)
0: Disabled
1: Enabled

When an instantaneous power failure occurs during operation, the torque at acceleration is limited to save electric energy charged in the capacitor in the servo amplifier and the time until AL. 10.2 (Voltage drop in the main circuit power) occurs is extended with the instantaneous power failure tough drive function. Consequently, you can set a longer time in parameter PF25 (SEMI-F47 function - Instantaneous power failure detection time). The torque limit function at instantaneous power failure is enabled when "SEMI-F47 function selection" in parameter PA20 is "Enabled (□1□□)".

For manufacturer setting
000: Manufacturer setting

Tab. 7-4: *Detailed overview of parameters PA for MR-J4-A-RJ (12)*

7.3 MR-J4-B(-RJ)

NOTES

When you connect the amplifier to a servo system controller, servo parameter values of the servo system controller will be written to each parameter.

Setting may not be made to some parameters and their ranges depending on the servo system controller model, servo amplifier software version, and MR Configurator2 software version. For details, refer to the servo system controller user's manual.

7.3.1 Basic setting parameters

NOTES

The parameter whose symbol is preceded by * is enabled with the following conditions:

- *: After setting the parameter, cycle the power or reset the controller.
- **: After setting the parameter, cycle the power.

Abbreviations of operation modes indicate the followings.

- Standard: Standard (semi closed loop system) use of the rotary servo motor
- Full.: Fully closed loop system use of the rotary servo motor
- Lin.: Linear servo motor use
- DD: Direct drive (DD) motor use

For servo amplifier with software version B3 or later, the parameter initial values for the manufacturer setting are partially changed.

Parameters PA□□

No.	Symbol	Name	Initial value	Unit	Operation mode			
					Standard	Full.	Lin.	DD
PA01	**STY	Operation mode	1000H	—	✔	✔	✔	✔
PA02	**REG	Regenerative option	0000H	—	✔	✔	✔	✔
PA03	*ABS	Absolute position detection system	0000H	—	✔	✔	✔	✔
PA04	*AOP1	Function selection A-1	2000H	—	✔	✔	✔	✔
PA05	—	For manufacturer setting	10000	—	—	—	—	—
PA06	—		1	—	—	—	—	—
PA07	—		1	—	—	—	—	—
PA08	ATU	Auto tuning mode	0001H	—	✔	✔	✔	✔
PA09	RSP	Auto tuning response	16	—	✔	✔	✔	✔
PA10	INP	In-position range	1600	pulse	✔	✔	✔	✔
PA11	—	For manufacturer setting	1000.0	—	—	—	—	—
PA12	—		1000.0	—	—	—	—	—
PA13	—		0000H	—	—	—	—	—
PA14	*POL	Rotation direction selection/travel direction selection	0	—	✔	✔	✔	✔
PA15	*ENR	Encoder output pulses	4000	pulse/rev	✔	✔	✔	✔
PA16	*ENR2	Encoder output pulses 2	1	—	✔	✔	✔	✔
PA17	**MSR	Servo motor series setting	0000H	—	—	—	✔	—
PA18	**MTY	Servo motor type setting	0000H	—	—	—	✔	—
PA19	*BLK	Parameter writing inhibit	00ABH	—	✔	✔	✔	✔
PA20	*TDS	Tough drive setting	0000H	—	✔	✔	✔	✔
PA21	*AOP3	Function selection A-3	0001H	—	✔	✔	✔	✔
PA22	**PCS	Position control composition selection	0000H	—	✔	—	—	—
PA23	DRAT	Drive recorder arbitrary alarm trigger setting	0000H	—	✔	✔	✔	✔
PA24	AOP4	Function selection A-4	0000H	—	✔	✔	✔	✔
PA25	OTHOV	One-touch tuning – Overshoot permissible level	0	%	✔	✔	✔	✔
PA26	*AOP5	Function selection A-5	0000H	—	✔	✔	✔	✔
PA27	—	For manufacturer setting	0000H	—	—	—	—	—
PA28	—		0000H	—	—	—	—	—
PA29	—		0000H	—	—	—	—	—
PA30	—		0000H	—	—	—	—	—
PA31	—		0000H	—	—	—	—	—
PA32	—		0000H	—	—	—	—	—

Tab. 7-5: *List of basic setting parameters for MR-J4-B(-RJ)*

Description of basic setting parameters

Number	Symbol	Initial value	Unit	Setting range
PA01	****STY**	**1000H**		**Refer to text**

Operation mode

	0		0

For manufacturer setting
□0□0: Manufacturer setting

Operation mode selection
0: Standard control mode
1: Fully closed loop control mode
4. Linear servo motor control mode
6: DD motor control mode (Except 400 V class servo amplifiers)

Setting other than above will result in AL. 37 (Parameter error). The fully closed loop system is available for the MR-J4-□B□(-RJ) servo amplifiers of which software version is A3 or above.

Operation mode selection
0: J3 compatibility mode
1: J4 mode

To change this digit, use an application software "MR-J4(W)-B mode selection". When you change it without the application, AL.3E (Operation mode error) will occur.

PA02	****REG**	**0000H**		**Refer to text**

Regenerative option

0	0		

Select the regenerative option.
00: Regenerative option is not used.
- For the servo amplifier of 100 W, a regenerative resistor is not used.
- For the servo amplifier of 0.2 kW to 7 kW, the built-in regenerative resistor is used.
- The supplied regenerative resistor or a regenerative option is used with the servo amplifier of 11 kW to 22 kW.

01: FR-RC-(H)/FR-CV-(H)/FR-BU2-(H)
When you use FR-RC-(H), FR-CV-(H) or FR-BU2-(H), select "Mode 2 (□□□1)" in parameter PC20 (Undervoltage alarm detection mode selection).
02: MR-RB032/MR-RFH75-40
03: MR-RB12MR-RFH75-40
04: MR-RB32/MR-RFH220-40
05: MR-RB30/MR-RFH400-13
06: MR-RB50 (Cooling fan is required.)/MR-RFH400-13
08: MR-RB31/MR-RFH400-6.7
09: MR-RB51 (Cooling fan is required.)/MR-RFH400-6.7
0B: MR-RB3N/MR-PWR-R T 400-9
0C: MR-RB5N (Cooling fan is required.)/MR-PWR-R T 400-9
80: MR-RB1H-4
81: MR-RB3M-4 (Cooling fan is required.)/MR-PWR-R T 400-120
82: MR-RB3G-4 (Cooling fan is required.)/MR-PWR-R T 600-47
83: MR-RB5G-4 (Cooling fan is required.)/MR-PWR-R T 600-47
84: MR-RB34-4 (Cooling fan is required.)/MR-PWR-R T 600-26
85: MR-RB54-4 (Cooling fan is required.)/MR-PWR-R T 600-26
91: MR-RB3U-4 (Cooling fan is required.)
92: MR-RB5U-4 (Cooling fan is required.)
FA: When the supplied regenerative resistor or a regenerative option used with the servo amplifier of 11 kW to 22 kW is cooled by a cooling fan to increase regenerative ability.

For manufacturer setting
00: Manufacturer setting

Incorrect setting may cause the regenerative option to burn.
If a selected regenerative option is not for use with the servo amplifier, AL. 37 (Parameter error) occurs.

Tab. 7-6: *Detailed overview of parameters PA for MR-J4-B(-RJ) (1)*

Number	Symbol	Initial value	Unit	Setting range
PA03	***ABS**	**0000H**		**Refer to text**

Absolute position detection system

0	0	0	

Absolute position detection system selection
0: Disabled (used in incremental system)
1: Enabled (used in absolute position detection system)

For manufacturer setting
000: Manufacturer setting

Set this parameter when using the absolute position detection system. The parameter is not available in the speed control mode and torque control mode.

PA04	*AOP1	2000H		Refer to text

Function selection A-1

This is used to select the forced stop input and forced stop deceleration function.

		0	0

For manufacturer setting
00: Manufacturer setting

Servo forced stop selection
0: Enabled (The forced stop input EM2 or EM1 is used.)
1: Disabled (The forced stop input EM2 and EM1 are not used.)
Refer to the following table for details.

Forced stop deceleration function selection
0: Forced stop deceleration function disabled (with EM1)
2: Forced stop deceleration function enabled (with EM2)
Refer to the following table for details.

Setting value	EM2/EM1	Deceleration method	
		EM2 or EM1 is off	Alarm occurred
00□□	EM1	MBR (Electromagnetic brake interlock) turns off without the forced stop deceleration.	MBR (Electromagnetic brake interlock) turns off without the forced stop deceleration.
20□□	EM2	MBR (Electromagnetic brake interlock) turns off after the forced stop deceleration.	MBR (Electromagnetic brake interlock) turns off after the forced stop deceleration.
01□□	Not using EM2 or EM1	—	MBR (Electromagnetic brake interlock) turns off without the forced stop deceleration.
21□□	Not using EM2 or EM1	—	MBR (Electromagnetic brake interlock) turns off after the forced stop deceleration.

Tab. 7-6: *Detailed overview of parameters PA for MR-J4-B(-RJ) (2)*

Number	Symbol	Initial value	Unit	Setting range
PA08	**ATU**	**0001H**		**Refer to text**

Auto tuning mode

Gain adjustment mode selection

0	0	0	

Select the gain adjustment mode.
0: 2 gain adjustment mode 1 (interpolation mode)
1: Auto tuning mode 1
2: Auto tuning mode 2
3: Manual mode
4: 2 gain adjustment mode 2

Refer to the following table for details.

For manufacturer setting
000: Manufacturer setting

Setting value	Gain adjustment mode	Automatically adjusted parameter
□□□0	2 gain adjustment mode 1 (interpolation mode)	PB06 (Load to motor inertia ratio/load to motor mass ratio) PB08 (Position loop gain) PB09 (Speed loop gain) PB10 (Speed integral compensation)
□□□1	Auto tuning mode 1	PB06 (Load to motor inertia ratio/load to motor mass ratio) PB07 (Model loop gain) PB08 (Position loop gain) PB09 (Speed loop gain) PB10 (Speed integral compensation)
□□□2	Auto tuning mode 2	PB07 (Model loop gain) PB08 (Position loop gain) PB09 (Speed loop gain) PB10 (Speed integral compensation)
□□□3	Manual mode	—
□□□4	2 gain adjustment mode 2	PB08 (Position loop gain) PB09 (Speed loop gain) PB10 (Speed integral compensation)

Tab. 7-6: *Detailed overview of parameters PA for MR-J4-B(-RJ) (3)*

Number	Symbol	Initial value	Unit	Setting range
PA09	**RSP**	**16**		**1–40**

Auto tuning response
Set a response of the auto tuning.

Setting value	Machine characteristic		Setting value	Machine characteristic	
	Response	Guideline for machine resonance frequency [Hz]		Response	Guideline for machine resonance frequency [Hz]
1	low	2.7	21	middle	67.1
2		3.6	22		75.6
3		4.9	23		85.2
4		6.6	24		95.9
5		10.0	25		108.0
6		11.3	26		121.7
7		12.7	27		137.1
8		14.3	28		154.4
9		16.1	29		173.9
10		18.1	30		195.9
11		20.4	31		220.6
12		23.0	32		248.5
13		25.9	33		279.9
14		29.2	34		315.3
15		32.9	35		355.1
16		37.0	36		400.0
17		41.7	37		446.6
18		47.0	38		501.2
19		52.9	39		571.5
20	middle	59.6	40	high	642.7

PA10	**INP**	**1600**	**pulse**	**0–65535**

In-position range
Set an in-position range per command pulse.

Tab. 7-6: *Detailed overview of parameters PA for MR-J4-B(-RJ) (4)*

Number	Symbol	Initial value	Unit	Setting range
PA14	***POL**	**0**		**0, 1**

Rotation direction selection/travel direction selection

This is used to select a rotation direction or travel direction.

For the setting for the master-slave operation function, refer to the instruction manual.

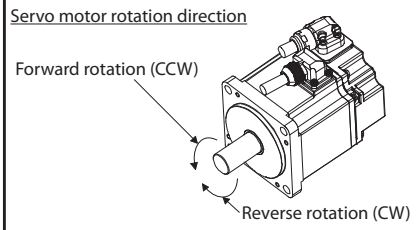

Setting value	Servo motor rotation direction/ linear servo motor travel direction	
	Positioning address increase	Positioning address decrease
0	CCW or positive direction	CW or negative direction
1	CW or negative direction	CCW or positive direction

The positive/negative directions of the linear servo motor are as follows.

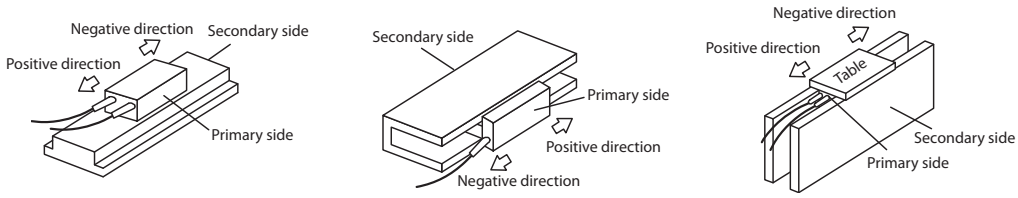

LM-H3/LM-F series LM-U2 series LM-K2 series

PA15	***ENR**	**4000**	**pulse/rev**	**1–65535**

Encoder output pulses

Set the encoder output pulses from the servo amplifier by using the number of output pulses per revolution, dividing ratio, or electronic gear ratio (after multiplication by 4).

To set a numerator of the electronic gear, select "A-phase/B-phase pulse electronic gear setting (□□3□)" of "Encoder output pulse setting selection" in parameter PC03.

The maximum output frequency is 4.6 Mpulses/s. Set the parameter within this range.

PA16	***ENR2**	**1**		**1–65535**

Encoder output pulses 2

Set a denominator of the electronic gear for the A/B-phase pulse output.

To set a denominator of the electronic gear, select "A-phase/B-phase pulse electronic gear setting (□□3□)" of "Encoder output pulse setting selection" in parameter PC03.

Tab. 7-6: *Detailed overview of parameters PA for MR-J4-B(-RJ) (5)*

Number	Symbol	Initial value	Unit	Setting range
PA17	****MSR**	**0000H**		**Refer to text**

Servo motor series setting
When you use a linear servo motor, select its model from parameters PA17 and PA18. Set this and parameter PA18 at a time.
Refer to the following table for settings.

Linear servo motor series	Servo motor model (primary side)	Parameter setting	
		PA17	PA18
LM-H3	LM-H3P2A-07P-BSS0	00BBH	2101H
	LM-H3P3A-12P-CSS0		3101H
	LM-H3P3B-24P-CSS0		3201H
	LM-H3P3C-36P-CSS0		3301H
	LM-H3P3D-48P-CSS0		3401H
	LM-H3P7A-24P-ASS0		7101H
	LM-H3P7B-48P-ASS0		7201H
	LM-H3P7C-72P-ASS0		7301H
	LM-H3P7D-96P-ASS0		7401H
LM-U2	LM-U2PAB-05M-0SS0	00B4H	A201H
	LM-U2PAD-10M-0SS0		A401H
	LM-U2PAF-15M-0SS0		A601H
	LM-U2PBB-07M-1SS0		B201H
	LM-U2PBD-15M-1SS0		B401H
	LM-U2PBF-22M-1SS0		2601H
	LM-U2P2B-40M-2SS0		2201H
	LM-U2P2C-60M-2SS0		2301H
	LM-U2P2D-80M-2SS0		2401H
LM-F	LM-FP2B-06M-1SS0 ①	00B2H	2201H
	LM-FP2D-12M-1SS0 ①		2401H
	LM-FP2F-18M-1SS0 ①		2601H
	LM-FP4B-12M-1SS0 ①		4201H
	LM-FP4D-24M-1SS0 ①		4401H
	LM-FP4F-36M-1SS0 ①		4601H
	LM-FP4H-48M-1SS0 ①		4801H
	LM-FP5H-60M-1SS0 ①		5801H
	LM-FP2B-06M-1SS0 ②		2202H
	LM-FP2D-12M-1SS0 ②		2402H
	LM-FP2F-18M-1SS0 ②		2602H
	LM-FP4B-12M-1SS0 ②		4202H
	LM-FP4D-24M-1SS0 ②		4402H
	LM-FP4F-36M-1SS0 ②		4602H
	LM-FP4H-48M-1SS0 ②		4802H
	LM-FP5H-60M-1SS0 ②		5802H
LM-K2	LM-K2P1A-01M-2SS1	00B8H	1101H
	LM-K2P1C-03M-2SS1		1301H
	LM-K2P2A-02M-1SS1		2101H
	LM-K2P2C-07M-1SS1		2301H
	LM-K2P2E-12M-1SS1		2501H
	LM-K2P3C-14M-1SS1		3301H
	LM-K2P3E-24M-1SS1		3501H

PA18	****MTY**	**0000H**		**Refer to text**

Servo motor type setting
When you use a linear servo motor, select its model from parameter PA17 and PA18.
Set this and parameter PA17 at a time.
Refer to the table of parameter PA17 for settings.

Tab. 7-6: *Detailed overview of parameters PA for MR-J4-B(-RJ) (6)*

① Natural cooling

② Liquid cooling

Number	Symbol	Initial value	Unit	Setting range
PA19	***BLK**	**00ABH**		**Refer to text**

Parameter writing inhibit
Select a reference range and writing range of the parameter.
Refer to the following table for settings.

PA19	Setting operation	PA	PB	PC	PD	PE	PF	PL
Other than below	Reading	✔	—	—	—	—	—	—
	Writing	✔	—	—	—	—	—	—
000AH	Reading	Only 19	—	—	—	—	—	—
	Writing	Only 19	—	—	—	—	—	—
000BH	Reading	✔	✔	✔	—	—	—	—
	Writing	✔	✔	✔	—	—	—	—
000CH	Reading	✔	✔	✔	✔	—	—	—
	Writing	✔	✔	✔	✔	—	—	—
000FH	Reading	✔	✔	✔	✔	✔	—	✔
	Writing	✔	✔	✔	✔	✔	—	✔
00AAH	Reading	✔	✔	✔	✔	✔	✔	—
	Writing	✔	✔	✔	✔	✔	✔	—
00ABH (initial value)	Reading	✔	✔	✔	✔	✔	✔	✔
	Writing	✔	✔	✔	✔	✔	✔	✔
100BH	Reading	✔	—	—	—	—	—	—
	Writing	Only 19	—	—	—	—	—	—
100CH	Reading	✔	✔	✔	✔	—	—	—
	Writing	Only 19	—	—	—	—	—	—
100FH	Reading	✔	✔	✔	✔	✔	—	✔
	Writing	Only 19	—	—	—	—	—	—
10AAH	Reading	✔	✔	✔	✔	✔	✔	—
	Writing	Only 19	—	—	—	—	—	—
10ABH	Reading	✔	✔	✔	✔	✔	✔	✔
	Writing	Only 19	—	—	—	—	—	—

Tab. 7-6: *Detailed overview of parameters PA for MR-J4-B(-RJ) (7)*

Number	Symbol	Initial value	Unit	Setting range
PA20	***TDS**	**0000H**		**Refer to text**

Tough drive setting

Alarms may not be avoided with the tough drive function depending on the situations of the power supply and load fluctuation.

You can assign MTTR (During tough drive) to the pins CN3-9, CN3-13 and CN3-15 with parameters PD07 to PD09.

0			0

For manufacturer setting
0□□0: Manufacturer setting

Vibration tough drive selection
0: Disabled
1: Enabled

Selecting "1" enables to suppress vibrations by automatically changing setting values of parameters PB13 (Machine resonance suppression filter 1) and PB15 (Machine resonance suppression filter 2) in case that the vibration exceed the value of the oscillation level set in parameter PF23.
To output the oscillation detection alarm as a warning, set parameter PF24 (Vibration tough drive function selection).
Refer to the instruction manual for details.

SEMI-F47 function selection
0: Disabled
1: Enabled

Selecting "1" enables to avoid occurring AL. 10 (Undervoltage) using the electrical energy charged in the capacitor in case that an instantaneous power failure occurs during operation. In parameter PF25 (SEMI-F47 function - Instantaneous power failure detection time), set the time period until the occurrence of AL. 10.1 (Voltage drop in the control circuit power).

PA21	***AOP3**	**0001H**		**Refer to text**

Function selection A-3

0	0	0	

One-touch tuning function selection
0: Disabled
1: Enabled

When the digit is "0", the one-touch tuning with MR Configurator2 will be disabled.

For manufacturer setting
000: Manufacturer setting

PA22	****PCS**	**0000H**		**Refer to text**

Position control composition selection

	0	0	0

For manufacturer setting
000: Manufacturer setting

Scale measurement mode selection
0: Disabled
1: Used in absolute position detection system
2: Used in incremental system

The absolute position detection system cannot be used while an incremental type encoder is used. Enabling absolute position detection system will trigger AL. 37 (Parameter error).
Additionally, the setting is enabled only in the standard control mode. Setting other than "0" in other operation modes triggers AL. 37 (Parameter error).

Tab. 7-6: *Detailed overview of parameters PA for MR-J4-B(-RJ) (8)*

Number	Symbol	Initial value	Unit	Setting range
PA23	**DRAT**	**0000H**		**Refer to text**

Drive recorder arbitrary alarm trigger setting

Alarm detail No. setting
Set the digits when you execute the trigger with arbitrary alarm detail No. for the drive recorder function.
When these digits are "0 0", only the arbitrary alarm No. setting will be enabled.

Alarm No. setting
Set the digits when you execute the trigger with arbitrary alarm No. for the drive recorder function.
When "0 0" are set, arbitrary alarm trigger of the drive recorder will be disabled.

Setting example:
To activate the drive recorder when AL. 50 (Overload 1) occurs, set "5 0 0 0".
To activate the drive recorder when AL. 50.3 (Thermal overload error 4 during operation) occurs, set "5 0 0 3".

PA24	**AOP4**	**0000H**		**Refer to text**

Function selection A-4

0	0	0	

Vibration suppression mode selection
0: Standard mode
1: 3 inertia mode
2: Low response mode

When two low resonance frequencies are generated, select "3 inertia mode (□□□1)". When the load to motor inertia ratio exceeds the recommended load to motor inertia ratio, select "Low response mode (□□□2)".
When you select the standard mode or low response mode, "Vibration suppression control 2" is not available.
When you select the 3 inertia mode, the feed forward gain is not available.
Before changing the control mode with the controller during the 3 inertia mode or low response mode, stop the motor.

For manufacturer setting
000: Manufacturer setting

PA25	**OTHOV**	**0**	**%**	**0–100**

One-touch tuning -Overshoot permissible level

Set a permissible value of overshoot amount for one-touch tuning as a percentage of the in-position range.
Setting "0" will be 50%.

PA26	***AOP5**	**0000H**		**Refer to text**

Function selection A-5

0	0	0	

Torque limit function selection at instantaneous power failure (instantaneous power failure tough drive selection)
0: Disabled
1: Enabled

When an instantaneous power failure occurs during operation, the torque at acceleration is limited to save electric energy charged in the capacitor in the servo amplifier and the time until AL. 10.2 (Voltage drop in the main circuit power) occurs is extended with the instantaneous power failure tough drive function. Consequently, you can set a longer time in parameter PF25 (SEMI-F47 function - Instantaneous power failure detection time). The torque limit function at instantaneous power failure is enabled when "SEMI-F47 function selection" in parameter PA20 is "Enabled (□1□□)".

This parameter setting is used with servo amplifier with software version A6 or later.

For manufacturer setting
000: Manufacturer setting

Tab. 7-6: *Detailed overview of parameters PA for MR-J4-B(-RJ) (9)*

7.4 MR-J4W-B

NOTES

When you connect the amplifier to a servo system controller, servo parameter values of the servo system controller will be written to each parameter.

Setting may not be made to some parameters and their ranges depending on the servo system controller model, servo amplifier software version, and MR Configurator2 software version. For details, refer to the servo system controller user's manual.

7.4.1 Basic setting parameters

NOTES

The parameter whose symbol is preceded by * is enabled with the following conditions:

- *: After setting the parameter, cycle the power or reset the controller.
- **: After setting the parameter, cycle the power.

How to set parameters:

- Each: Set parameters for each axis of A, B, and C.
- Common: Set parameters for common axis of A, B, and C. Be sure to set the same value to all axes.

The same values are set as default for all axes.

Abbreviations of operation modes indicate the followings.

- Standard: Standard (semi closed loop system) use of the rotary servo motor
- Full.: Fully closed loop system use of the rotary servo motor
- Lin.: Linear servo motor use
- DD: Direct drive (DD) motor use

For MR-J4W2-0306B6 servo amplifiers, the operation mode is available only in standard (semi closed loop system).

Setting an out of range value to each parameter will trigger AL. 37 (Parameter error).

The following parameters are not available with MR-J4W2-0303B6 servo amplifiers.

- Pr. PA02 (Regenerative option)
- Pr. PA17 (Servo motor series setting)
- Pr. PA18 (Servo motor type setting)
- Pr. PA22 (Position control composition selection)

Parameters PA□□

No.	Symbol	Name	Initial value	Unit	Each/ Common	Operation mode			
						Standard	Full.	Lin.	DD
PA01	**STY	Operation mode	1000H	—	Each	✔	✔	✔	✔
PA02	**REG	Regenerative option	0000H	—	Common	✔	✔	✔	✔
PA03	*ABS	Absolute position detection system	0000H	—	Each	✔	✔	✔	✔
PA04	*AOP1	Function selection A-1	2000H	—	Common	✔	✔	✔	✔
PA05	—	For manufacturer setting	10000	—	—	—	—	—	—
PA06	—		1	—	—	—	—	—	—
PA07	—		1	—	—	—	—	—	—
PA08	ATU	Auto tuning mode	0001H	—	Each	✔	✔	✔	✔
PA09	RSP	Auto tuning response	16	—	Each	✔	✔	✔	✔
PA10	INP	In-position range	1600	pulse	Each	✔	✔	✔	✔
PA11	—	For manufacturer setting	1000.0	—	—	—	—	—	—
PA12	—		1000.0	—	—	—	—	—	—
PA13	—		0000H	—	—	—	—	—	—
PA14	*POL	Rotation direction selection/travel direction selection	0	—	Each	✔	✔	✔	✔
PA15	*ENR	Encoder output pulses	4000	pulse/rev	Each	✔	✔	✔	✔
PA16	*ENR2	Encoder output pulses 2	1	—	Each	✔	✔	✔	✔
PA17	**MSR	Servo motor series setting	0000H	—	Each	—	—	✔	—
PA18	**MTY	Servo motor type setting	0000H	—	Each	—	—	✔	—
PA19	*BLK	Parameter writing inhibit	00ABH	—	Each	✔	✔	✔	✔
PA20	*TDS	Tough drive setting	0000H	—	Each	✔	✔	✔	✔
PA21	*AOP3	Function selection A-3	0001H	—	Each	✔	✔	✔	✔
PA22	**PCS	Position control composition selection	0000H	—	Each	✔	—	—	—
PA23	DRAT	Drive recorder arbitrary alarm trigger setting	0000H	—	Each	✔	✔	✔	✔
PA24	AOP4	Function selection A-4	0000H	—	Each	✔	✔	✔	✔
PA25	OTHOV	One-touch tuning – Overshoot permissible level	0	%	Each	✔	✔	✔	✔
PA26	—	For manufacturer setting	0000H	—	—	—	—	—	—
PA27	—		0000H	—	—	—	—	—	—
PA28	—		0000H	—	—	—	—	—	—
PA29	—		0000H	—	—	—	—	—	—
PA30	—		0000H	—	—	—	—	—	—
PA31	—		0000H	—	—	—	—	—	—
PA32	—		0000H	—	—	—	—	—	—

Tab. 7-7: *List of basic setting parameters for MR-J4W-B*

Description of basic setting parameters

Number	Symbol	Initial value	Unit	Setting range	Each/ Common
PA01	****STY**	**1000H**		**Refer to text**	**Each**

Operation mode

	0		0

For manufacturer setting
□0□0: Manufacturer setting

Operation mode selection
0: Standard control mode
1: Fully closed loop control mode
4. Linear servo motor control mode
6: DD motor control mode (Except 400 V class servo amplifiers)

Setting other than above will result in AL. 37 (Parameter error). The fully closed loop system is available for the MRJ4W2-□B servo amplifiers of which software version is A3 or above. It will not be available with MR-J4W3-□B servo amplifiers.

Operation mode selection
0: J3 compatibility mode
1: J4 mode

To change this digit, use an application software "MR-J4(W)-B mode selection". When you change it without the application, AL. 3E (Operation mode error) will occur.
Set the digit as common setting.

PA02	****REG**	**0000H**		**Refer to text**	**Common**

Regenerative option

0	0		

Select the regenerative option.
00: Regenerative option is not used. (Built-in regenerative resistor is used.)
0B: MR-RB3N/MR-PWR-R T 400-9
0D: MR-RB14/MR-PWR-R T 600-26
0E: MR-RB34/MR-PWR-R T 600-26

For manufacturer setting
00: Manufacturer setting

Incorrect setting may cause the regenerative option to burn.

If a selected regenerative option is not for use with the servo amplifier, AL. 37 (Parameter error) occurs.

Tab. 7-8: *Detailed overview of parameters PA for MR-J4W-B (1)*

Number	Symbol	Initial value	Unit	Setting range	Each/ Common
PA03	***ABS**	**0000H**		**Refer to text**	**Each**

Absolute position detection system

0	0	0	

Absolute position detection system selection
0: Disabled (used in incremental system)
1: Enabled (used in absolute position detection system)

For manufacturer setting
000: Manufacturer setting

Set this parameter when using the absolute position detection system. The parameter is not available in the speed control mode and torque control mode.

PA04	*AOP1	2000H		Refer to text	Common

Function selection A-1

This is used to select the forced stop input and forced stop deceleration function.

		0	0

For manufacturer setting
00: Manufacturer setting

Servo forced stop selection
0: Enabled (The forced stop input EM2 or EM1 is used.)
1: Disabled (The forced stop input EM2 and EM1 are not used.)
Refer to the following table for details.

Forced stop deceleration function selection
0: Forced stop deceleration function disabled (with EM1)
2: Forced stop deceleration function enabled (with EM2)
Refer to the following table for details.

Setting value	EM2/EM1	Deceleration method	
		EM2 or EM1 is off	Alarm occurred
00□□	EM1	MBR (Electromagnetic brake interlock) turns off without the forced stop deceleration.	MBR (Electromagnetic brake interlock) turns off without the forced stop deceleration.
20□□	EM2	MBR (Electromagnetic brake interlock) turns off after the forced stop deceleration.	MBR (Electromagnetic brake interlock) turns off after the forced stop deceleration.
01□□	Not using EM2 or EM1	—	MBR (Electromagnetic brake interlock) turns off without the forced stop deceleration.
21□□	Not using EM2 or EM1	—	MBR (Electromagnetic brake interlock) turns off after the forced stop deceleration.

Tab. 7-8: *Detailed overview of parameters PA for MR-J4W-B (2)*

Number	Symbol	Initial value	Unit	Setting range	Each/ Common
PA08	**ATU**	**0001H**		**Refer to text**	**Each**

Auto tuning mode
Gain adjustment mode selection

0	0	0	

Select the gain adjustment mode.
0: 2 gain adjustment mode 1 (interpolation mode)
1: Auto tuning mode 1
2: Auto tuning mode 2
3: Manual mode
4: 2 gain adjustment mode 2
Refer to the following table for details.

For manufacturer setting
000: Manufacturer setting

Setting value	Gain adjustment mode	Automatically adjusted parameter
□□□0	2 gain adjustment mode 1 (interpolation mode)	PB06 (Load to motor inertia ratio/load to motor mass ratio) PB08 (Position loop gain) PB09 (Speed loop gain) PB10 (Speed integral compensation)
□□□1	Auto tuning mode 1	PB06 (Load to motor inertia ratio/load to motor mass ratio) PB07 (Model loop gain) PB08 (Position loop gain) PB09 (Speed loop gain) PB10 (Speed integral compensation)
□□□2	Auto tuning mode 2	PB07 (Model loop gain) PB08 (Position loop gain) PB09 (Speed loop gain) PB10 (Speed integral compensation)
□□□3	Manual mode	—
□□□4	2 gain adjustment mode 2	PB08 (Position loop gain) PB09 (Speed loop gain) PB10 (Speed integral compensation)

Tab. 7-8: *Detailed overview of parameters PA for MR-J4W-B (3)*

Number	Symbol	Initial value	Unit	Setting range	Each/ Common
PA09	**RSP**	**16**		**1–40**	**Each**

Auto tuning response
Set a response of the auto tuning.

Setting value	Machine characteristic	
	Response	Guideline for machine resonance frequency [Hz]
1	low	2.7
2		3.6
3		4.9
4		6.6
5		10.0
6		11.3
7		12.7
8		14.3
9		16.1
10		18.1
11		20.4
12		23.0
13		25.9
14		29.2
15		32.9
16		37.0
17		41.7
18		47.0
19		52.9
20	middle	59.6

Setting value	Machine characteristic	
	Response	Guideline for machine resonance frequency [Hz]
21	middle	67.1
22		75.6
23		85.2
24		95.9
25		108.0
26		121.7
27		137.1
28		154.4
29		173.9
30		195.9
31		220.6
32		248.5
33		279.9
34		315.3
35		355.1
36		400.0
37		446.6
38		501.2
39		571.5
40	high	642.7

PA10	**INP**	**1600**	**pulse**	**0–65535**	**Each**

In-position range
Set an in-position range per command pulse.

Tab. 7-8: *Detailed overview of parameters PA for MR-J4W-B (4)*

Number	Symbol	Initial value	Unit	Setting range	Each/ Common
PA14	***POL**	**0**		**0, 1**	**Each**

Rotation direction selection/travel direction selection

This is used to select a rotation direction or travel direction.

For the setting for the master-slave operation function, refer to the instruction manual.

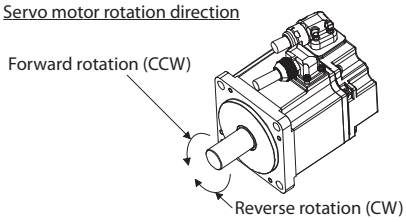

Setting value	Servo motor rotation direction/ linear servo motor travel direction	
	Positioning address increase	Positioning address decrease
0	CCW or positive direction	CW or negative direction
1	CW or negative direction	CCW or positive direction

The positive/negative directions of the linear servo motor are as follows.

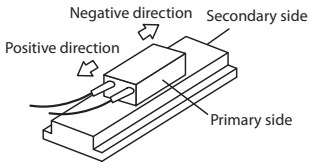

LM-H3/LM-F series

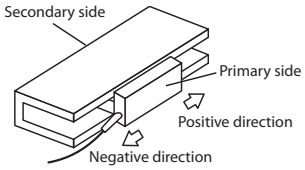

LM-U2 series

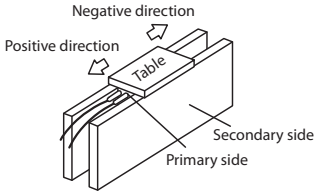

LM-K2 series

PA15	*ENR	4000	pulse/rev	1–65535	Each

Encoder output pulses

Set the encoder output pulses from the servo amplifier by using the number of output pulses per revolution, dividing ratio, or electronic gear ratio (after multiplication by 4).

To set a numerator of the electronic gear, select "A-phase/B-phase pulse electronic gear setting (□□3□)" of "Encoder output pulse setting selection" in parameter PC03.

The maximum output frequency is 4.6 Mpulses/s. Set the parameter within this range.

PA16	*ENR2	1		1–65535	Each

Encoder output pulses 2

Set a denominator of the electronic gear for the A/B-phase pulse output.

To set a denominator of the electronic gear, select "A-phase/B-phase pulse electronic gear setting (□□3□)" of "Encoder output pulse setting selection" in parameter PC03.

Tab. 7-8: *Detailed overview of parameters PA for MR-J4W-B (5)*

Number	Symbol	Initial value	Unit	Setting range	Each/ Common
PA17	****MSR**	**0000H**		**Refer to text**	**Each**

Servo motor series setting
When you use a linear servo motor, select its model from parameters PA17 and PA18. Set this and parameter PA18 at a time.
Refer to the following table for settings.

Linear servo motor series	Servo motor model (primary side)	Parameter setting	
		PA17	PA18
LM-H3	LM-H3P2A-07P-BSS0	00BBH	2101H
	LM-H3P3A-12P-CSS0		3101H
	LM-H3P3B-24P-CSS0		3201H
	LM-H3P3C-36P-CSS0		3301H
	LM-H3P3D-48P-CSS0		3401H
	LM-H3P7A-24P-ASS0		7101H
	LM-H3P7B-48P-ASS0		7201H
	LM-H3P7C-72P-ASS0		7301H
	LM-H3P7D-96P-ASS0		7401H
LM-U2	LM-U2PAB-05M-0SS0	00B4H	A201H
	LM-U2PAD-10M-0SS0		A401H
	LM-U2PAF-15M-0SS0		A601H
	LM-U2PBB-07M-1SS0		B201H
	LM-U2PBD-15M-1SS0		B401H
	LM-U2PBF-22M-1SS0		2601H
	LM-U2P2B-40M-2SS0		2201H
	LM-U2P2C-60M-2SS0		2301H
	LM-U2P2D-80M-2SS0		2401H
LM-K2	LM-K2P1A-01M-2SS1	00B8H	1101H
	LM-K2P1C-03M-2SS1		1301H
	LM-K2P2A-02M-1SS1		2101H
	LM-K2P2C-07M-1SS1		2301H
	LM-K2P2E-12M-1SS1		2501H
	LM-K2P3C-14M-1SS1		3301H
	LM-K2P3E-24M-1SS1		3501H

PA18	****MTY**	**0000H**		**Refer to text**	**Each**

Servo motor type setting
When you use a linear servo motor, select its model from parameter PA17 and PA18.
Set this and parameter PA17 at a time.
Refer to the table of parameter PA17 for settings.

Tab. 7-8: *Detailed overview of parameters PA for MR-J4W-B (6)*

Number	Symbol	Initial value	Unit	Setting range	Each/ Common
PA19	***BLK**	**00ABH**		**Refer to text**	**Each**

Parameter writing inhibit
Select a reference range and writing range of the parameter.
Refer to the following table for settings.

PA19	Setting operation	PA	PB	PC	PD	PE	PF	PL
Other than below	Reading	✔	—	—	—	—	—	—
	Writing	✔	—	—	—	—	—	—
000AH	Reading	Only 19	—	—	—	—	—	—
	Writing	Only 19	—	—	—	—	—	—
000BH	Reading	✔	✔	✔	—	—	—	—
	Writing	✔	✔	✔	—	—	—	—
000CH	Reading	✔	✔	✔	✔	—	—	—
	Writing	✔	✔	✔	✔	—	—	—
000FH	Reading	✔	✔	✔	✔	✔	—	✔
	Writing	✔	✔	✔	✔	✔	—	✔
00AAH	Reading	✔	✔	✔	✔	✔	✔	—
	Writing	✔	✔	✔	✔	✔	✔	—
00ABH (initial value)	Reading	✔	✔	✔	✔	✔	✔	✔
	Writing	✔	✔	✔	✔	✔	✔	✔
100BH	Reading	✔	—	—	—	—	—	—
	Writing	Only 19	—	—	—	—	—	—
100CH	Reading	✔	✔	✔	✔	—	—	—
	Writing	Only 19	—	—	—	—	—	—
100FH	Reading	✔	✔	✔	✔	✔	—	✔
	Writing	Only 19	—	—	—	—	—	—
10AAH	Reading	✔	✔	✔	✔	✔	✔	—
	Writing	Only 19	—	—	—	—	—	—
10ABH	Reading	✔	✔	✔	✔	✔	✔	✔
	Writing	Only 19	—	—	—	—	—	—

Tab. 7-8: *Detailed overview of parameters PA for MR-J4W-B (7)*

Number	Symbol	Initial value	Unit	Setting range	Each/ Common
PA20	***TDS**	**0000H**		**Refer to text**	**Each**

Tough drive setting

Alarms may not be avoided with the tough drive function depending on the situations of the power supply and load fluctuation.

You can assign MTTR (During tough drive) to the pins CN3-11 to CN3-13, CN3-24, and CN3-25with parameters PD07 to PD09.

0			0

For manufacturer setting
0□□0: Manufacturer setting

Vibration tough drive selection
0: Disabled
1: Enabled

Selecting "1" enables to suppress vibrations by automatically changing setting values of parameters PB13 (Machine resonance suppression filter 1) and PB15 (Machine resonance suppression filter 2) in case that the vibration exceed the value of the oscillation level set in parameter PF23.
Refer to the instruction manual for details.

SEMI-F47 function selection
0: Disabled
1: Enabled

Selecting "1" enables to avoid occurring AL. 10 (Undervoltage) using the electrical energy charged in the capacitor in case that an instantaneous power failure occurs during operation. In parameter PF25 (SEMI-F47 function - Instantaneous power failure detection time), set the time period until the occurrence of AL. 10.1 (Voltage drop in the control circuit power).

A specified axis cannot be enabled for the instantaneous power failure tough drive function.

PA21	***AOP3**	**0001H**		**Refer to text**	**Each**

Function selection A-3

0	0	0	

One-touch tuning function selection
0: Disabled
1: Enabled

When the digit is "0", the one-touch tuning with MR Configurator2 will be disabled.

For manufacturer setting
000: Manufacturer setting

PA22	****PCS**	**0000H**		**Refer to text**	**Each**

Position control composition selection

	0	0	0

For manufacturer setting
000: Manufacturer setting

Scale measurement mode selection
0: Disabled
1: Used in absolute position detection system
2: Used in incremental system

The setting of this digit is enabled with software version A8 or later.

The absolute position detection system cannot be used while an incremental type encoder is used. Enabling absolute position detection system will trigger AL. 37 (Parameter error).
Additionally, the setting is enabled only in the standard control mode. Setting other than "0" in other operation modes triggers AL. 37 (Parameter error).

Tab. 7-8: *Detailed overview of parameters PA for MR-J4W-B (8)*

Number	Symbol	Initial value	Unit	Setting range	Each/ Common
PA23	**DRAT**	**0000H**		**Refer to text**	**Each**

Drive recorder arbitrary alarm trigger setting

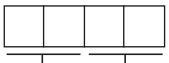

Alarm detail No. setting
Set the digits when you execute the trigger with arbitrary alarm detail No. for the drive recorder function.
When these digits are "0 0", the drive recorder will operate with any alarm No. regardless of detail numbers.

Alarm No. setting
Set the digits when you execute the trigger with arbitrary alarm No. for the drive recorder function.
When "0 0" are set, arbitrary alarm trigger of the drive recorder will be disabled.

Setting example:
To activate the drive recorder when AL. 50 (Overload 1) occurs, set "5 0 0 0".
To activate the drive recorder when AL. 50.3 (Thermal overload error 4 during operation) occurs, set "5 0 0 3".

PA24	**AOP4**	**0000H**		**Refer to text**	**Each**

Function selection A-4

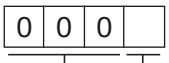

Vibration suppression mode selection
0: Standard mode
1: 3 inertia mode
2: Low response mode

When two low resonance frequencies are generated, select "3 inertia mode (□□□1)". When the load to motor inertia ratio exceeds the recommended load to motor inertia ratio, select "Low response mode (□□□2)".
When you select the standard mode or low response mode, "Vibration suppression control 2" is not available.
When you select the 3 inertia mode, the feed forward gain is not available.
Before changing the control mode with the controller during the 3 inertia mode or low response mode, stop the motor.

For manufacturer setting
000: Manufacturer setting

PA25	**OTHOV**	**0**	**%**	**0–100**	**Each**

One-touch tuning -Overshoot permissible level
Set a permissible value of overshoot amount for one-touch tuning as a percentage of the in-position range.
Setting "0" will be 50%.

Tab. 7-8: *Detailed overview of parameters PA for MR-J4W-B (9)*

7.5 MR-J4-GF(-RJ)

WARNING:

When you write parameters with the servo system controller, make sure that the station No. of the servo amplifier is set correctly. Otherwise, the parameter settings of another station may be written, possibly causing the servo amplifier to have an unexpected condition.

7.5.1 Basic setting parameters

NOTES

The parameter whose symbol is preceded by * is enabled with the following conditions:

- *: After setting the parameter, cycle the power or reset the controller.
- **: After setting the parameter, cycle the power.

Abbreviations of operation modes indicate the followings. Operation modes other than the standard mode is used with servo amplifiers with software version A1 or later.

- Standard: Standard (semi closed loop system) use of the rotary servo motor
- Full.: Fully closed loop system use of the rotary servo motor
- Lin.: Linear servo motor use
- DD: Direct drive (DD) motor use

Parameters PA□□

No.	Symbol	Name	Initial value	Unit	Operation mode			
					Standard	Full.	Lin.	DD
PA01	**STY	Operation mode	1000H	—	✔	✔	✔	✔
PA02	**REG	Regenerative option	0000H	—	✔	✔	✔	✔
PA03	*ABS	Absolute position detection system	0000H	—	✔	✔	✔	✔
PA04	*AOP1	Function selection A-1	2000H	—	✔	✔	✔	✔
PA05	—	For manufacturer setting	10000	—	—	—	—	—
PA06	—		1	—	—	—	—	—
PA07	—		1	—	—	—	—	—
PA08	ATU	Auto tuning mode	0001H	—	✔	✔	✔	✔
PA09	RSP	Auto tuning response	16	—	✔	✔	✔	✔
PA10	INP	In-position range	1600	pulse	✔	✔	✔	✔
PA11	TLP	Forward rotation torque limit/positive direction thrust limit	1000.0	%	✔	✔	✔	✔
PA12	TLN	Reverse rotation torque limit/negative direction thrust limit	1000.0	%	✔	✔	✔	✔
PA13	—	For manufacturer setting	0000H	—	—	—	—	—
PA14	*POL	Rotation direction selection/travel direction selection	0	—	✔	✔	✔	✔
PA15	*ENR	Encoder output pulses	4000	pulse/rev	✔	✔	✔	✔
PA16	*ENR2	Encoder output pulses 2	1	—	✔	✔	✔	✔
PA17	**MSR	Servo motor series setting	0000H	—	—	—	✔	—
PA18	**MTY	Servo motor type setting	0000H	—	—	—	✔	—
PA19	*BLK	Parameter writing inhibit	00ABH	—	✔	✔	✔	✔
PA20	*TDS	Tough drive setting	0000H	—	✔	✔	✔	✔
PA21	*AOP3	Function selection A-3	0001H	—	✔	✔	✔	✔
PA22	**PCS	Position control composition selection	0000H	—	✔	✔	✔	✔
PA23	DRAT	Drive recorder arbitrary alarm trigger setting	0000H	—	✔	✔	✔	✔
PA24	AOP4	Function selection A-4	0000H	—	✔	✔	✔	✔
PA25	OTHOV	One-touch tuning – Overshoot permissible level	0	%	✔	✔	✔	✔
PA26	*AOP5	Function selection A-5	0000H	—	✔	✔	✔	✔
PA27	—	For manufacturer setting	0000H	—	—	—	—	—
PA28	—		0000H	—	—	—	—	—
PA29	—		0000H	—	—	—	—	—
PA30	—		0000H	—	—	—	—	—
PA31	—		0000H	—	—	—	—	—
PA32	—		0000H	—	—	—	—	—

Tab. 7-9: *List of basic setting parameters for MR-J4-GF(-RJ)*

Description of basic setting parameters

Number	Symbol	Initial value	Unit	Setting range
PA01	****STY**	**1000H**		**Refer to text**

Operation mode

1	0		

Control mode selection
Select a control mode.
0: Automatic selection
8: Positioning mode (indexer method)

When "0" is set, either of the following control modes is set depending on the setting value of parameter PN03.

PN03	Control mode
□□□0 (motion mode)	Cyclic synchronous mode (position/velocity/torque)
□□□1 (I/O mode)	Positioning mode (point table method)

When "8" is set, if parameter PN03 is set to "□□□0", AL. 37 will occur.
Refer to "MR-J4-GF(-RJ) Servo Amplifier Instruction Manual (I/O Mode)" for details of the positioning mode.
This digit is available with servo amplifier with software version A3 or later.

Operation mode selection
0: Standard control mode
1: Fully closed loop control mode
4. Linear servo motor control mode
6: DD motor control mode

Setting other than above will result in AL. 37 (Parameter error).
The setting of this digit is used by servo amplifier with software version A1 or later.

For manufacturer setting
10: Manufacturer setting

Tab. 7-10: *Detailed overview of parameters PA for MR-J4-GF(-RJ) (1)*

Number	Symbol	Initial value	Unit	Setting range
PA02	****REG**	**0000H**		**Refer to text**

Regenerative option

0	0		

Select the regenerative option.

00: Regenerative option is not used.
- For the servo amplifier of 100 W, a regenerative resistor is not used.
- For the servo amplifier of 0.2 kW to 7 kW, the built-in regenerative resistor is used.
- The supplied regenerative resistor or a regenerative option is used with the servo amplifier of 11 kW to 22 kW.

01: FR-RC-(H)/FR-CV-(H)/FR-BU2-(H)
When you use FR-RC-(H) or FR-CV-(H), select "AL. 10 occurrence (□□□1)" in parameter PC20 (Undervoltage alarm detection mode selection).
02: MR-RB032/MR-RFH75-40
03: MR-RB12/MR-RFH75-40
04: MR-RB32/MR-RFH220-40
05: MR-RB30/MR-RFH400-13
06: MR-RB50 (Cooling fan is required.)/MR-RFH400-13
08: MR-RB31/MR-RFH400-6.7
09: MR-RB51 (Cooling fan is required.)/MR-RFH400-6.7
0B: MR-RB3N/MR-PWR-R T 400-9
0C: MR-RB5N (Cooling fan is required.)/MR-PWR-R T 400-9
80: MR-RB1H-4
81: MR-RB3M-4 (Cooling fan is required.)/MR-PWR-R T 400-120
82: MR-RB3G-4 (Cooling fan is required.)/MR-PWR-R T 600-47
83: MR-RB5G-4 (Cooling fan is required.)/MR-PWR-R T 600-47
84: MR-RB34-4 (Cooling fan is required.)/MR-PWR-R T 600-26
85: MR-RB54-4 (Cooling fan is required.)/MR-PWR-R T 600-26
91: MR-RB3U-4 (Cooling fan is required.)
92: MR-RB5U-4 (Cooling fan is required.)
FA: When the supplied regenerative resistor or a regenerative option used with the servo amplifier of 11 kW to 22 kW is cooled by a cooling fan to increase regenerative ability.

For manufacturer setting
00: Manufacturer setting

Incorrect setting may cause the regenerative option to burn.
If a selected regenerative option is not for use with the servo amplifier, AL. 37 (Parameter error) occurs.

PA03	*ABS	0000H		Refer to text

Absolute position detection system

0	0	0	

Absolute position detection system selection
0: Disabled (used in incremental system)
1: Enabled (used in absolute position detection system)

For manufacturer setting
000: Manufacturer setting

Set this parameter when using the absolute position detection system.The absolute position detection system cannot be used when an incremental type linear encoder is used or the semi closed loop/fully closed loop switching is enabled. Enabling the absolute position detection system will trigger AL. 37.

Tab. 7-10: *Detailed overview of parameters PA for MR-J4-GF(-RJ) (2)*

Number	Symbol	Initial value	Unit	Setting range
PA04	***AOP1**	**2000H**		**Refer to text**

Function selection A-1

This is used to select the forced stop input and forced stop deceleration function.

		0	0

For manufacturer setting
00: Manufacturer setting

Servo forced stop selection
0: Enabled (The forced stop input EM2 or EM1 is used.)
1: Disabled (The forced stop input EM2 and EM1 are not used.)

Refer to the following table for details.

Forced stop deceleration function selection
0: Forced stop deceleration function disabled (with EM1)
2: Forced stop deceleration function enabled (with EM2)

Refer to the following table for details.

Setting value	EM2/EM1	Deceleration method	
		EM2 or EM1 is off	Alarm occurred
00□□	EM1	MBR (Electromagnetic brake interlock) turns off without the forced stop deceleration.	MBR (Electromagnetic brake interlock) turns off without the forced stop deceleration.
20□□	EM2	MBR (Electromagnetic brake interlock) turns off after the forced stop deceleration.	MBR (Electromagnetic brake interlock) turns off after the forced stop deceleration.
01□□	Not using EM2 or EM1	—	MBR (Electromagnetic brake interlock) turns off without the forced stop deceleration.
21□□	Not using EM2 or EM1	—	MBR (Electromagnetic brake interlock) turns off after the forced stop deceleration.

Tab. 7-10: *Detailed overview of parameters PA for MR-J4-GF(-RJ) (3)*

Number	Symbol	Initial value	Unit	Setting range
PA08	**ATU**	**0001H**		**Refer to text**

Auto tuning mode
Gain adjustment mode selection

0	0	0	

Select the gain adjustment mode.
0: 2 gain adjustment mode 1 (interpolation mode)
1: Auto tuning mode 1
2: Auto tuning mode 2
3: Manual mode
4: 2 gain adjustment mode 2
Refer to the following table for details.

For manufacturer setting
000: Manufacturer setting

Setting value	Gain adjustment mode	Automatically adjusted parameter
□□□0	2 gain adjustment mode 1 (interpolation mode)	PB06 (Load to motor inertia ratio/load to motor mass ratio) PB08 (Position loop gain) PB09 (Speed loop gain) PB10 (Speed integral compensation)
□□□1	Auto tuning mode 1	PB06 (Load to motor inertia ratio/load to motor mass ratio) PB07 (Model loop gain) PB08 (Position loop gain) PB09 (Speed loop gain) PB10 (Speed integral compensation)
□□□2	Auto tuning mode 2	PB07 (Model loop gain) PB08 (Position loop gain) PB09 (Speed loop gain) PB10 (Speed integral compensation)
□□□3	Manual mode	—
□□□4	2 gain adjustment mode 2	PB08 (Position loop gain) PB09 (Speed loop gain) PB10 (Speed integral compensation)

Tab. 7-10: *Detailed overview of parameters PA for MR-J4-GF(-RJ) (4)*

Number	Symbol	Initial value	Unit	Setting range
PA09	**RSP**	**16**		**1–40**

Auto tuning response

Set a response of the auto tuning.

Setting value	Machine characteristic		Setting value	Machine characteristic	
	Response	Guideline for machine resonance frequency [Hz]		Response	Guideline for machine resonance frequency [Hz]
1	low	2.7	21	middle	67.1
2		3.6	22		75.6
3		4.9	23		85.2
4		6.6	24		95.9
5		10.0	25		108.0
6		11.3	26		121.7
7		12.7	27		137.1
8		14.3	28		154.4
9		16.1	29		173.9
10		18.1	30		195.9
11		20.4	31		220.6
12		23.0	32		248.5
13		25.9	33		279.9
14		29.2	34		315.3
15		32.9	35		355.1
16		37.0	36		400.0
17		41.7	37		446.6
18		47.0	38		501.2
19		52.9	39		571.5
20	middle	59.6	40	high	642.7

PA10	**INP**	**1600**	**pulse**	**0–65535**

In-position range

Set an in-position range per command pulse.

PC06.

In the motion mode, the in-position range is the range where INP is outputted. The unit is fixed to [pulse].

PA11	**TLP**	**1000.0**	**%**	**0.0–1000.0**

Forward rotation torque limit/positive direction thrust limit

You can limit the torque or thrust generated by the servo motor.

When you output the torque or thrust with analog monitor output, the larger value of parameter PA11 (Forward rotation torque limit/positive direction thrust limit) or parameter PA12 (Reverse rotation torque limit/negative direction thrust limit) will be the maximum output voltage (8 V).

Set the parameter on the assumption that the rated torque or continuous thrust is 100.0 %. The parameter is for limiting the torque of the servo motor in the CCW power running or CW regeneration, or limiting the thrust of the linear servo motor in the positive direction power running or negative direction regeneration. Set this parameter to "0.0" to generate no torque or thrust.

The polarity of torque limit can be changed depending on the setting values of parameter PA14 (Rotation direction selection/travel direction selection) and parameter PC29 (POL reflection selection at torque mode).

Tab. 7-10: *Detailed overview of parameters PA for MR-J4-GF(-RJ) (5)*

Number	Symbol	Initial value	Unit	Setting range
PA12	**TLN**	**1000.0**	**%**	**0.0–1000.0**

Reverse rotation torque limit/negative direction thrust limit

You can limit the torque or thrust generated by the servo motor.

When you output the torque or thrust with analog monitor output, the larger value of parameter PA11 (Forward rotation torque limit/positive direction thrust limit) or parameter PA12 (Reverse rotation torque limit/negative direction thrust limit) will be the maximum output voltage (8 V).
Set the parameter on the assumption that the rated torque or continuous thrust is 100.0%. The parameter is for limiting the torque of the servo motor in the CW power running or CCW regeneration, or limiting the thrust of the linear servo motor in the negative direction power running or positive direction regeneration. Set this parameter to "0.0" to generate no torque or thrust.

The polarity of torque limit can be changed depending on the setting values of parameter PA14 (Rotation direction selection/travel direction selection) and parameter PC29 (POL reflection selection at torque mode).

PA14	***POL**	**0**		**0, 1**

Rotation direction selection/travel direction selection

This is used to select a rotation direction or travel direction.

The torque polarity can be changed with the combination of this parameter and parameter PC29 (Torque POL reflection selection).

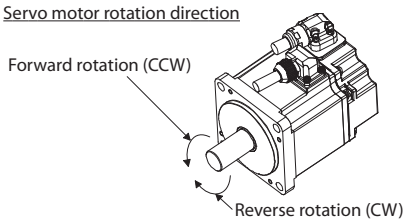

- At position mode/velocity mode

Setting value	Servo motor rotation direction/ linear servo motor travel direction	
	Position mode – Positioning address:	
	Increase	**Decrease**
	Velocity mode – Speed command:	
	Positive	**Negative**
0	CCW or positive direction	CW or negative direction
1	CW or negative direction	CCW or positive direction

- At torque mode

Parameter setting value		Servo motor rotation direction/travel direction	
		Torque mode – Torque command:	
PA14	**PC29**	**Positive**	**Negative**
0	0□□□: Enabled	CCW or positive direction	CW or negative direction
	1□□□: Disabled	CCW or positive direction	CW or negative direction
1	0□□□: Enabled	CW or negative direction	CCW or positive direction
	1□□□: Disabled	CCW or positive direction	CW or negative direction

The positive/negative directions of the linear servo motor are as follows.

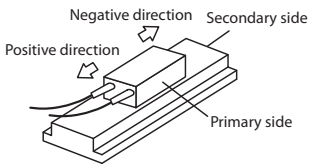

LM-H3/LM-F series

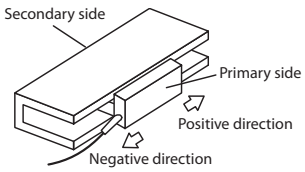

LM-U2 series

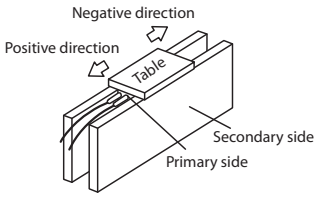

LM-K2 series

Tab. 7-10: *Detailed overview of parameters PA for MR-J4-GF(-RJ) (6)*

Number	Symbol	Initial value	Unit	Setting range
PA15	***ENR**	**4000**	**pulse/rev**	**1–4194304**
Encoder output pulses Set the encoder output pulses from the servo amplifier by using the number of output pulses per revolution, dividing ratio, or electronic gear ratio (after multiplication by 4). Selecting "Dividing ratio setting (□□1□)" of "Encoder output pulse setting selection" in parameter PC03 will divide the travel distance [pulse] of the linear encoder by the setting value. To set a numerator of the electronic gear, select “A-phase/B-phase pulse electronic gear setting (□□3□)” of “Encoder output pulse setting selection” in parameter PC03. The maximum output frequency is 4.6 Mpulses/s. Set the parameter within this range.				
PA16	***ENR2**	**1**		**1–4194304**
Encoder output pulses 2 Set a denominator of the electronic gear for the A/B-phase pulse output. To set a denominator of the electronic gear, select “A-phase/B-phase pulse electronic gear setting (□□3□)” of “Encoder output pulse setting selection” in parameter PC03. Selecting "Dividing ratio setting (□□1□)" of "Encoder output pulse setting selection" in parameter PC03 will disable the setting value.				

Tab. 7-10: *Detailed overview of parameters PA for MR-J4-GF(-RJ) (7)*

Number	Symbol	Initial value	Unit	Setting range
PA17	****MSR**	**0000H**		**Refer to text**

Servo motor series setting
When you use a linear servo motor, select its model from parameters PA17 and PA18. Set this and parameter PA18 at a time.
Refer to the following table for settings.

Linear servo motor series	Servo motor model (primary side)	Parameter setting	
		PA17	PA18
LM-H3	LM-H3P2A-07P-BSS0	00BBH	2101H
	LM-H3P3A-12P-CSS0		3101H
	LM-H3P3B-24P-CSS0		3201H
	LM-H3P3C-36P-CSS0		3301H
	LM-H3P3D-48P-CSS0		3401H
	LM-H3P7A-24P-ASS0		7101H
	LM-H3P7B-48P-ASS0		7201H
	LM-H3P7C-72P-ASS0		7301H
	LM-H3P7D-96P-ASS0		7401H
LM-U2	LM-U2PAB-05M-0SS0	00B4H	A201H
	LM-U2PAD-10M-0SS0		A401H
	LM-U2PAF-15M-0SS0		A601H
	LM-U2PBB-07M-1SS0		B201H
	LM-U2PBD-15M-1SS0		B401H
	LM-U2PBF-22M-1SS0		2601H
	LM-U2P2B-40M-2SS0		2201H
	LM-U2P2C-60M-2SS0		2301H
	LM-U2P2D-80M-2SS0		2401H
LM-F	LM-FP2B-06M-1SS0 ①	00B2H	2201H
	LM-FP2D-12M-1SS0 ①		2401H
	LM-FP2F-18M-1SS0 ①		2601H
	LM-FP4B-12M-1SS0 ①		4201H
	LM-FP4D-24M-1SS0 ①		4401H
	LM-FP4F-36M-1SS0 ①		4601H
	LM-FP4H-48M-1SS0 ①		4801H
	LM-FP5H-60M-1SS0 ①		5801H
	LM-FP2B-06M-1SS0 ②		2202H
	LM-FP2D-12M-1SS0 ②		2402H
	LM-FP2F-18M-1SS0 ②		2602H
	LM-FP4B-12M-1SS0 ②		4202H
	LM-FP4D-24M-1SS0 ②		4402H
	LM-FP4F-36M-1SS0 ②		4602H
	LM-FP4H-48M-1SS0 ②		4802H
	LM-FP5H-60M-1SS0 ②		5802H
LM-K2	LM-K2P1A-01M-2SS1	00B8H	1101H
	LM-K2P1C-03M-2SS1		1301H
	LM-K2P2A-02M-1SS1		2101H
	LM-K2P2C-07M-1SS1		2301H
	LM-K2P2E-12M-1SS1		2501H
	LM-K2P3C-14M-1SS1		3301H
	LM-K2P3E-24M-1SS1		3501H

PA18	****MTY**	**0000H**		**Refer to text**

Servo motor type setting
When you use a linear servo motor, select its model from parameter PA17 and PA18.
Set this and parameter PA17 at a time.
Refer to the table of parameter PA17 for settings.

Tab. 7-10: *Detailed overview of parameters PA for MR-J4-GF(-RJ) (8)*

① Natural cooling

② Liquid cooling

Number	Symbol	Initial value	Unit	Setting range
PA19	***BLK**	**00ABH**		**Refer to text**

Parameter writing inhibit
Select a reference range and writing range of the parameter.
Refer to the following table for settings.

PA19	Setting operation	PA	PB	PC	PD	PE	PF	PL	PT	PN
Other than below	Reading	✔	—	—	—	—	—	—	—	—
	Writing	✔	—	—	—	—	—	—	—	—
000AH	Reading	Only 19	—	—	—	—	—	—	—	—
	Writing	Only 19	—	—	—	—	—	—	—	—
000BH	Reading	✔	✔	✔	—	—	—	—	—	—
	Writing	✔	✔	✔	—	—	—	—	—	—
000CH	Reading	✔	✔	✔	✔	—	—	—	—	—
	Writing	✔	✔	✔	✔	—	—	—	—	—
000FH	Reading	✔	✔	✔	✔	✔	—	✔	—	—
	Writing	✔	✔	✔	✔	✔	—	✔	—	—
00AAH	Reading	✔	✔	✔	✔	✔	✔	—	—	—
	Writing	✔	✔	✔	✔	✔	✔	—	—	—
00ABH (initial value)	Reading	✔	✔	✔	✔	✔	✔	✔	✔	✔
	Writing	✔	✔	✔	✔	✔	✔	✔	✔	✔
100BH	Reading	✔	—	—	—	—	—	—	—	—
	Writing	Only 19	—	—	—	—	—	—	—	—
100CH	Reading	✔	✔	✔	✔	—	—	—	—	—
	Writing	Only 19	—	—	—	—	—	—	—	—
100FH	Reading	✔	✔	✔	✔	✔	—	✔	—	—
	Writing	Only 19	—	—	—	—	—	—	—	—
10AAH	Reading	✔	✔	✔	✔	✔	✔	—	—	—
	Writing	Only 19	—	—	—	—	—	—	—	—
10ABH	Reading	✔	✔	✔	✔	✔	✔	✔	✔	✔
	Writing	Only 19	—	—	—	—	—	—	—	—

Tab. 7-10: *Detailed overview of parameters PA for MR-J4-GF(-RJ) (9)*

Number	Symbol	Initial value	Unit	Setting range
PA20	***TDS**	**0000H**		**Refer to text**

Tough drive setting

Alarms may not be avoided with the tough drive function depending on the situations of the power supply and load fluctuation.

You can assign MTTR (During tough drive) to the pins CN3-9, CN3-13 and CN3-15 with parameters PD07 to PD09.

0			0

For manufacturer setting
0□□0: Manufacturer setting

Vibration tough drive selection
0: Disabled
1: Enabled

Selecting "1" enables to suppress vibrations by automatically changing setting values of parameters PB13 (Machine resonance suppression filter 1) and PB15 (Machine resonance suppression filter 2) in case that the vibration exceed the value of the oscillation level set in parameter PF23.
The parameter will operate when parameters PB13 (Machine resonance suppression filter 1) and PB15 (Machine resonance suppression filter 2) are enabled.
Refer to the instruction manual for details.

SEMI-F47 function selection
0: Disabled
1: Enabled

Selecting "1" enables to avoid occurring AL. 10 (Undervoltage) using the electrical energy charged in the capacitor in case that an instantaneous power failure occurs during operation. In parameter PF25 (SEMI-F47 function - Instantaneous power failure detection time), set the time period until the occurrence of AL. 10.1 (Voltage drop in the control circuit power).

PA21	***AOP3**	**0001H**		**Refer to text**

Function selection A-3

0	0	0	

One-touch tuning function selection
0: Disabled
1: Enabled

When the digit is "0", the one-touch tuning with MR Configurator2 will be disabled.

For manufacturer setting
000: Manufacturer setting

PA22	****PCS**	**0000H**		**Refer to text**

Position control composition selection

	0		0

For manufacturer setting
□0□0: Manufacturer setting

Super trace control selection
0: Disabled
2: Enabled

Scale measurement mode selection
0: Disabled
1: Used in absolute position detection system
2: Used in incremental system

The absolute position detection system cannot be used while an incremental type encoder is used. Enabling absolute position detection system will trigger AL. 37 (Parameter error).
Additionally, the setting is enabled only in the standard control mode. Setting other than "0" in other operation modes triggers AL. 37 (Parameter error).

The setting of this digit is used by servo amplifier with software version A1 or later.

Tab. 7-10: *Detailed overview of parameters PA for MR-J4-GF(-RJ) (10)*

Number	Symbol	Initial value	Unit	Setting range
PA23	**DRAT**	**0000H**		**Refer to text**

Drive recorder arbitrary alarm trigger setting

Alarm detail No. setting
Set the digits when you execute the trigger with arbitrary alarm detail No. for the drive recorder function.
When these digits are "0 0", only the arbitrary alarm No. setting will be enabled.

Alarm No. setting
Set the digits when you execute the trigger with arbitrary alarm No. for the drive recorder function.
When "0 0" are set, arbitrary alarm trigger of the drive recorder will be disabled.

Setting example:
To activate the drive recorder when AL. 50 (Overload 1) occurs, set "5 0 0 0".
To activate the drive recorder when AL. 50.3 (Thermal overload error 4 during operation) occurs, set "5 0 0 3".

PA24	**AOP4**	**0000H**		**Refer to text**

Function selection A-4

0	0	0	

Vibration suppression mode selection
0: Standard mode
1: 3 inertia mode
2: Low response mode

When you select the standard mode or low response mode, "Vibration suppression control 2" is not available.
When you select the 3 inertia mode, the feed forward gain is not available.
Before changing the control mode with the controller during the 3 inertia mode or low response mode, stop the motor.

For manufacturer setting
000: Manufacturer setting

PA25	**OTHOV**	**0**	**%**	**0–100**

One-touch tuning - Overshoot permissible level

Set a permissible value of overshoot amount for one-touch tuning as a percentage of the in-position range.
Setting "0" will be 50%.

PA26	***AOP5**	**0000H**		**Refer to text**

Function selection A-5

0	0	0	

Torque limit function selection at instantaneous power failure
0: Disabled
1: Enabled

When an instantaneous power failure occurs during operation, the torque at acceleration is limited to save electric energy charged in the capacitor in the servo amplifier and the time until AL. 10.2 (Voltage drop in the main circuit power) occurs is extended with the instantaneous power failure tough drive function. Consequently, you can set a longer time in parameter PF25 (SEMI-F47 function - Instantaneous power failure detection time). The torque limit function at instantaneous power failure is enabled when "SEMI-F47 function selection" in parameter PA20 is "Enabled (□1□□)".

For manufacturer setting
000: Manufacturer setting

Tab. 7-10: *Detailed overview of parameters PA for MR-J4-GF(-RJ) (11)*

7.6 MR-J4-TM

NOTE

EtherNet/IP is available with servo amplifiers with software version B0 or later.

PROFINET is available with servo amplifiers with software version B1 or later.

7.6.1 Basic setting parameters

NOTES

The parameter whose symbol is preceded by * is enabled with the following conditions:

- *: After setting the parameter, cycle the power or reset the network communication.
- **: After setting the parameter, cycle the power.

Abbreviations of operation modes indicate the followings.

- Standard: Standard (semi closed loop system) use of the rotary servo motor
- Full.: Fully closed loop system use of the rotary servo motor
- Lin.: Linear servo motor use
- DD: Direct drive (DD) motor use

Symbols in the network column indicate the following networks.

- ECT: EtherCAT
- EIP: EtherNet/IP
- PNT: Profinet

Parameters PA□□

No.	Symbol	Name	Initial value	Unit	Operation mode			
					Standard	Full.	Lin.	DD
PA01	**STY	Operation mode	1000H	—	✔	✔	✔	✔
PA02	**REG	Regenerative option	0000H	—	✔	✔	✔	✔
PA03	*ABS	Absolute position detection system	0000H	—	✔	✔	✔	✔
PA04	*AOP1	Function selection A-1	2000H	—	✔	✔	✔	✔
PA05	—	For manufacturer setting	10000	—	—	—	—	—
PA06	*CMX	Electronic gear numerator	1	—	✔	✔	✔	✔
PA07	*CDV	Electronic gear denominator	1	—	✔	✔	✔	✔
PA08	ATU	Auto tuning mode	0001H	—	✔	✔	✔	✔
PA09	RSP	Auto tuning response	16	—	✔	✔	✔	✔
PA10	INP	In-position range	1600	10^{-3} degree pulse	✔	✔	✔	✔
PA11	TLP	Forward rotation torque limit/positive direction thrust limit	1000.0	%	✔	✔	✔	✔
PA12	TLN	Reverse rotation torque limit/negative direction thrust limit	1000.0	%	✔	✔	✔	✔
PA13	—	For manufacturer setting	0000H	—	—	—	—	—
PA14	*POL	Rotation direction selection/travel direction selection	0	—	✔	✔	✔	✔
PA15	*ENR	Encoder output pulses	4000	pulse/rev	✔	✔	✔	✔
PA16	*ENR2	Encoder output pulses 2	1	—	✔	✔	✔	✔
PA17	**MSR	Servo motor series setting	0000H	—	—	—	✔	—
PA18	**MTY	Servo motor type setting	0000H	—	—	—	✔	—
PA19	*BLK	Parameter writing inhibit	00ABH	—	✔	✔	✔	✔
PA20	*TDS	Tough drive setting	0000H	—	✔	✔	✔	✔
PA21	*AOP3	Function selection A-3	0001H	—	✔	✔	✔	✔
PA22	**PCS	Position control composition selection	0000H	—	✔	✔	✔	✔
PA23	DRAT	Drive recorder arbitrary alarm trigger setting	0000H	—	✔	✔	✔	✔
PA24	AOP4	Function selection A-4	0000H	—	✔	✔	✔	✔
PA25	OTHOV	One-touch tuning – Overshoot permissible level	0	%	✔	✔	✔	✔
PA26	*AOP5	Function selection A-5	0000H	—	✔	✔	✔	✔
PA27	—	For manufacturer setting	0000H	—	—	—	—	—
PA28	—		0000H	—	—	—	—	—
PA29	—		0000H	—	—	—	—	—
PA30	—		0000H	—	—	—	—	—
PA31	—		0000H	—	—	—	—	—
PA32	—		0000H	—	—	—	—	—

Tab. 7-11: *List of basic setting parameters for MR-J4-TM*

Description of basic setting parameters

Number	Symbol	Initial value	Unit	Setting range	Network		
PA01	****STY**	**1000H**		**Refer to text**	**ECT**	**EIP**	**PNT**
Operation mode 1 0 □ □							
Control mode selection Select a control mode. 0: Automatic selection by each network It will be "Profile mode" during test operation or when the network module is not connected. 1: Cyclic synchronous mode 2: Profile mode Setting "1" when an incompatible network module is connected will trigger AL. 37 (Parameter error).					✔	✔	✔
Operation mode selection 0: Standard control mode 1: Fully closed loop control mode 4. Linear servo motor control mode 6: DD motor control mode Setting other than above will result in AL. 37 (Parameter error).					✔	✔	✔
For manufacturer setting 10: Manufacturer setting					—	—	—

PA01	Control mode		
	EtherCAT	EtherNet/IP ②	PROFINET ③
□□□0	Cyclic synchronous mode (csp/csv/cst) ① Homing mode (hm)	Profile mode (pp/pv/tq) Homing mode (hm)	Profile mode (pp/pv/tq) Homing mode (hm)
□□□1	Cyclic synchronous mode (csp/csv/cst) Homing mode (hm)	—	—
□□□2	Profile mode (pp/pv/tq) Homing mode (hm)	Profile mode (pp/pv/tq) Homing mode (hm)	Profile mode (pp/pv/tq) Homing mode (hm)

① Selecting "Fully closed loop selection command from controller (C_CLD) and switching by Input device CLD (Fully closed loop selection) (□□□1)" of "Fully closed loop function selection" in parameter PE01 will trigger AL. 37 (Parameter error) by turning on the test operation select switch (SW1-1).

② This is used with servo amplifiers with software version B0 or later.

③ This is used with servo amplifiers with software version B1 or later.

Tab. 7-12: *Detailed overview of parameters PA for MR-J4-TM (1)*

Number	Symbol	Initial value	Unit	Setting range	Network		
PA02	****REG**	**0000H**		**Refer to text**	**ECT**	**EIP**	**PNT**
Regenerative option 0 0 □ □ Select the regenerative option. 00: Regenerative option is not used. - For the servo amplifier of 100 W, a regenerative resistor is not used. - For the servo amplifier of 0.2 kW to 7 kW, the built-in regenerative resistor is used. - The supplied regenerative resistor or a regenerative option is used with the servo amplifier of 11 kW to 22 kW. 01: FR-RC-(H)/FR-CV-(H)/FR-BU2-(H) When you use FR-RC-(H) or FR-CV-(H), select "AL. 10 occurrence (□□□1)" in parameter PC20 (Undervoltage alarm detection mode selection). 02: MR-RB032/MR-RFH75-40 03: MR-RB12/MR-RFH75-40 04: MR-RB32/MR-RFH220-40 05: MR-RB30/MR-RFH400-13 06: MR-RB50 (Cooling fan is required.)/MR-RFH400-13 08: MR-RB31/MR-RFH400-6.7 09: MR-RB51 (Cooling fan is required.)/MR-RFH400-6.7 0B: MR-RB3N/MR-PWR-R T 400-9 0C: MR-RB5N (Cooling fan is required.)/MR-PWR-R T 400-9 80: MR-RB1H-4 81: MR-RB3M-4 (Cooling fan is required.)/MR-PWR-R T 400-120 82: MR-RB3G-4 (Cooling fan is required.)/MR-PWR-R T 600-47 83: MR-RB5G-4 (Cooling fan is required.)/MR-PWR-R T 600-47 84: MR-RB34-4 (Cooling fan is required.)/MR-PWR-R T 600-26 85: MR-RB54-4 (Cooling fan is required.)/MR-PWR-R T 600-26 91: MR-RB3U-4 (Cooling fan is required.) 92: MR-RB5U-4 (Cooling fan is required.) FA: When the supplied regenerative resistor or a regenerative option used with the servo amplifier of 11 kW to 22 kW is cooled by a cooling fan to increase regenerative ability.					✔	✔	✔
For manufacturer setting 00: Manufacturer setting					—	—	—
Incorrect setting may cause the regenerative option to burn. If a selected regenerative option is not for use with the servo amplifier, AL. 37 (Parameter error) occurs.							

PA03	*ABS	0000H		Refer to text	ECT	EIP	PNT
Absolute position detection system 0 0 0 □ Absolute position detection system selection 0: Disabled (used in incremental system) 1: Enabled (used in absolute position detection system)					✔	✔	✔
For manufacturer setting 000: Manufacturer setting					—	—	—
Set this parameter when using the absolute position detection system. The absolute position detection system cannot be used when an incremental type linear encoder is used or the semi closed loop/fully closed loop switching is enabled. Enabling the absolute position detection system will trigger AL. 37.							

Tab. 7-12: *Detailed overview of parameters PA for MR-J4-TM (2)*

Number	Symbol	Initial value	Unit	Setting range	Network		
PA04	***AOP1**	**2000H**		**Refer to text**	**ECT**	**EIP**	**PNT**
Function selection A-1 This is used to select the forced stop input and forced stop deceleration function. □□00 For manufacturer setting 00: Manufacturer setting					—	—	—
Servo forced stop selection 0: Enabled (The forced stop input EM2 or EM1 is used.) 1: Disabled (The forced stop input EM2 and EM1 are not used.) Refer to the following table for details.					✔	✔	✔
Forced stop deceleration function selection 0: Forced stop deceleration function disabled (with EM1) 2: Forced stop deceleration function enabled (with EM2) Refer to the following table for details.					✔	✔	✔

Setting value	EM2/EM1	Deceleration method	
		EM2 or EM1 is off	Alarm occurred
00□□	EM1	MBR (Electromagnetic brake interlock) turns off without the forced stop deceleration.	MBR (Electromagnetic brake interlock) turns off without the forced stop deceleration.
20□□	EM2	MBR (Electromagnetic brake interlock) turns off after the forced stop deceleration.	MBR (Electromagnetic brake interlock) turns off after the forced stop deceleration.
01□□	Not using EM2 or EM1	—	MBR (Electromagnetic brake interlock) turns off without the forced stop deceleration.
21□□	Not using EM2 or EM1	—	MBR (Electromagnetic brake interlock) turns off after the forced stop deceleration.

Tab. 7-12: *Detailed overview of parameters PA for MR-J4-TM (3)*

Number	Symbol	Initial value	Unit	Setting range	Network		
PA06	***CMX**	**1**		**1–16777215**	**ECT**	**EIP**	**PNT**
Electronic gear numerator Set the numerator of the electronic gear. Set the electronic gear within the following range. Setting out of the range will trigger AL. 37 (Parameter error). In the cyclic synchronous mode, setting anything other than 1/1 will trigger AL. 37 (Parameter error).. $\frac{1}{865} < \frac{CMX}{CDV} < 271471$ Always set the electronic gear with servo-off state to prevent unexpected operation due to improper setting. This parameter corresponds to "Motor revolutions (Index: 6091H, Sub: 1)". When this parameter is mapped for the PDO communication, the value written with MR Configurator2 is overwritten with the controller. Thus, do not write a value with MR Configurator2.					✔	—	—
Set the numerator of the electronic gear. Set the electronic gear within the following range. Setting out of the range will trigger AL. 37 (Parameter error). In the cyclic synchronous mode, setting anything other than 1/1 will trigger AL. 37 (Parameter error).. $\frac{1}{865} < \frac{CMX}{CDV} < 271471$ Always set the electronic gear with servo-off state to prevent unexpected operation due to improper setting. This parameter corresponds to "Motor revolutions (Class ID: 64H, Ins ID: 6091H, Attr ID: 1)". When this parameter is mapped for the I/O communication, the value written with MR Configurator2 is overwritten with the controller. Thus, do not write a value with MR Configurator2.					—	✔	—
Set an electronic gear numerator. Set the electronic gear within the following range. Setting out of the range will trigger AL. 37 (Parameter error). $\frac{1}{865} < \frac{CMX}{CDV} < 271471$ Always set the electronic gear with servo-off state to prevent unexpected operation due to improper setting. This parameter corresponds to "Motor revolutions (PNU: 24721, Sub: 0)". When this parameter is mapped for the Process Data communication, the value written with MR Configurator2 is overwritten with the controller. Thus, do not write a value with MR Configurator2.					—	—	✔

Tab. 7-12: *Detailed overview of parameters PA for MR-J4-TM (4)*

Number	Symbol	Initial value	Unit	Setting range	Network		
PA07	***CDV**	**1**		**1–16777215**	**ECT**	**EIP**	**PNT**
Electronic gear denominator Set the denominator of the electronic gear. Set the electronic gear within the range of parameter PA06. This parameter corresponds to "Shaft revolutions (Index: 6091H, Sub: 2)". When this parameter is mapped for the PDO communication, the value written with MR Configurator2 is overwritten with the controller. Thus, do not write a value with MR Configurator2.					✔	—	—
Set the denominator of the electronic gear. Set the electronic gear within the range of parameter PA06. This parameter corresponds to "Shaft revolutions (Class ID: 64H, Ins ID: 6091H, Attr ID: 2)". When this parameter is mapped for the I/O communication, the value written with MR Configurator2 is overwritten with the controller. Thus, do not write a value with MR Configurator2.					—	✔	—
Set an electronic gear denominator. Set the electronic gear within the range of parameter PA06. This parameter corresponds to "Shaft revolutions (PNU: 24721, Sub: 1)". When this parameter is mapped for the Process Data communication, the value written with MR Configurator2 is overwritten with the controller. Thus, do not write a value with MR Configurator2.					—	—	✔

PA08	ATU	0001H		Refer to text	ECT	EIP	PNT
Auto tuning mode Gain adjustment mode selection 0 0 0 □ Select the gain adjustment mode. 0: 2 gain adjustment mode 1 (interpolation mode) 1: Auto tuning mode 1 2: Auto tuning mode 2 3: Manual mode 4: 2 gain adjustment mode 2 Refer to the following table for details.					✔	✔	✔
For manufacturer setting 000: Manufacturer setting					—	—	—

Setting value	Gain adjustment mode	Automatically adjusted parameter
□□□0	2 gain adjustment mode 1 (interpolation mode)	PB06 (Load to motor inertia ratio/load to motor mass ratio) PB08 (Position loop gain) PB09 (Speed loop gain) PB10 (Speed integral compensation)
□□□1	Auto tuning mode 1	PB06 (Load to motor inertia ratio/load to motor mass ratio) PB07 (Model loop gain) PB08 (Position loop gain) PB09 (Speed loop gain) PB10 (Speed integral compensation)
□□□2	Auto tuning mode 2	PB07 (Model loop gain) PB08 (Position loop gain) PB09 (Speed loop gain) PB10 (Speed integral compensation)
□□□3	Manual mode	—
□□□4	2 gain adjustment mode 2	PB08 (Position loop gain) PB09 (Speed loop gain) PB10 (Speed integral compensation)

Tab. 7-12: *Detailed overview of parameters PA for MR-J4-TM (5)*

Number	Symbol	Initial value	Unit	Setting range	Network		
PA09	**RSP**	**16**		**1–40**	**ECT**	**EIP**	**PNT**
Auto tuning response Set a response of the auto tuning.					✔	✔	✔

Setting value	Machine characteristic	
	Response	Guideline for machine resonance frequency [Hz]
1	low	2.7
2		3.6
3		4.9
4		6.6
5		10.0
6		11.3
7		12.7
8		14.3
9		16.1
10		18.1
11		20.4
12		23.0
13		25.9
14		29.2
15		32.9
16		37.0
17		41.7
18		47.0
19		52.9
20	middle	59.6

Setting value	Machine characteristic	
	Response	Guideline for machine resonance frequency [Hz]
21	middle	67.1
22		75.6
23		85.2
24		95.9
25		108.0
26		121.7
27		137.1
28		154.4
29		173.9
30		195.9
31		220.6
32		248.5
33		279.9
34		315.3
35		355.1
36		400.0
37		446.6
38		501.2
39		571.5
40	high	642.7

PA10	INP	1600	Refer to text	0–65535	ECT	EIP	PNT
In-position range Set an in-position range per command pulse. To change it to the servo motor encoder pulse unit, set parameter PC06. When parameter PC06 is set to "□□□0" in the profile mode, the unit can be changed to 10^{-3} [degree] or [pulse] with the setting of parameter PT01.					✔	✔	✔

Tab. 7-12: *Detailed overview of parameters PA for MR-J4-TM (6)*

Number	Symbol	Initial value	Unit	Setting range	Network		
PA11	**TLP**	**1000.0**	**%**	**0.0–1000.0**	**ECT**	**EIP**	**PNT**
Forward rotation torque limit/positive direction thrust limit You can limit the torque or thrust generated by the servo motor. When torque or thrust is output with the analog monitor output, the setting of parameter PA11 (Forward rotation torque limit/positive direction thrust limit) or parameter PA12 (Reverse rotation torque limit/negative direction thrust limit), whichever is larger, will be the maximum output voltage (8 V). Set the parameter on the assumption that the rated torque or continuous thrust is 100.0%. Set the parameter for limiting the torque of the servo motor in the CCW power running or CW regeneration, or for limiting the thrust of the linear servo motor in the positive direction power running or negative direction regeneration. Set this parameter to "0.0" to generate no torque or thrust. The polarity of the torque limit can be changed depending on the setting values of parameter PA14 (Rotation direction selection/travel direction selection) and parameter PC29 (POL reflection selection at torque mode). This parameter corresponds to "Positive torque limit value (Index: 60E0H)". When this parameter is mapped for the PDO communication, the value written with MR Configurator2 is overwritten with the controller. Thus, do not write a value with MR Configurator2.					✔	—	—
You can limit the torque or thrust generated by the servo motor. When torque or thrust is output with the analog monitor output, the setting of parameter PA11 (Forward rotation torque limit/positive direction thrust limit) or parameter PA12 (reverse rotation torque limit/negative direction thrust limit), whichever is larger, will be the maximum output voltage (8 V). Set the parameter on the assumption that the rated torque or continuous thrust is 100.0%. Set the parameter for limiting the torque of the servo motor in the CCW power running or CW regeneration, or for limiting the thrust of the linear servo motor in the positive direction power running or negative direction regeneration. Set this parameter to "0.0" to generate no torque or thrust. The polarity of the torque limit can be changed depending on the setting values of parameter PA14 (Rotation direction selection/travel direction selection) and parameter PC29 (POL reflection selection at torque mode). This parameter corresponds to "Positive torque limit value (Class ID: 64H, Ins ID: 60E0H, Attr ID: 0)". When this parameter is mapped for the I/O communication, the value written with MR Configurator2 is overwritten with the controller. Thus, do not write a value with MR Configurator2.					—	✔	—
You can limit the torque or thrust generated by the servo motor. When torque or thrust is output with the analog monitor output, the setting of parameter PA11 (Forward rotation torque limit/positive direction thrust limit) or parameter PA12 (Reverse rotation torque limit/negative direction thrust limit), whichever is larger, will be the maximum output voltage (8 V). Set the parameter on the assumption that the rated torque or continuous thrust is 100.0%. Set the parameter for limiting the torque of the servo motor in the CCW power running or CW regeneration, or for limiting the thrust of the linear servo motor in the positive direction power running or negative direction regeneration. Set this parameter to "0.0" to generate no torque or thrust. The polarity of the torque limit can be changed depending on the setting values of parameter PA14 (Rotation direction selection/travel direction selection) and parameter PC29 (POL reflection selection at torque mode). This parameter corresponds to "Positive torque limit value (PNU: 24800, Sub: 0)". When this parameter is mapped for the Process Data communication, the value written with MR Configurator2 is overwritten with the controller. Thus, do not write a value with MR Configurator2.					—	—	✔

Tab. 7-12: *Detailed overview of parameters PA for MR-J4-TM (7)*

Number	Symbol	Initial value	Unit	Setting range	Network		
PA12	**TLN**	**1000.0**	**%**	**0.0–1000.0**	**ECT**	**EIP**	**PNT**
Reverse rotation torque limit/negative direction thrust limit You can limit the torque or thrust generated by the servo motor. When torque or thrust is output with the analog monitor output, the setting of parameter PA11 (Forward rotation torque limit/positive direction thrust limit) or parameter PA12 (Reverse rotation torque limit/negative direction thrust limit), whichever is larger, will be the maximum output voltage (8 V). Set the parameter on the assumption that the rated torque or continuous thrust is 100.0%. The parameter is for limiting the torque of the servo motor in the CW power running or CCW regeneration, or for limiting the thrust of the linear servo motor in the negative direction power running or positive direction regeneration. Set this parameter to "0.0" to generate no torque or thrust. The polarity of the torque limit can be changed depending on the setting values of parameter PA14 (Rotation direction selection/travel direction selection) and parameter PC29 (POL reflection selection at torque mode). This parameter corresponds to "Negative torque limit value (Index: 60E1H)". When this parameter is mapped for the PDO communication, the value written with MR Configurator2 is overwritten with the controller. Thus, do not write a value with MR Configurator2.					✔	—	—
You can limit the torque or thrust generated by the servo motor. When torque or thrust is output with the analog monitor output, the setting of parameter PA11 (Forward rotation torque limit/positive direction thrust limit) or parameter PA12 (Reverse rotation torque limit/negative direction thrust limit), whichever is larger, will be the maximum output voltage (8 V). Set the parameter on the assumption that the rated torque or continuous thrust is 100.0%. The parameter is for limiting the torque of the servo motor in the CW power running or CCW regeneration, or for limiting the thrust of the linear servo motor in the negative direction power running or positive direction regeneration. Set this parameter to "0.0" to generate no torque or thrust. The polarity of the torque limit can be changed depending on the setting values of parameter PA14 (Rotation direction selection/travel direction selection) and parameter PC29 (POL reflection selection at torque mode). This parameter corresponds to "Negative torque limit value (Class ID: 64H, Ins ID: 60E1H, Attr ID: 0)". When this parameter is mapped for the I/O communication, the value written with MR Configurator2 is overwritten with the controller. Thus, do not write a value with MR Configurator2.					—	✔	—
You can limit the torque or thrust generated by the servo motor. When torque or thrust is output with the analog monitor output, the setting of parameter PA11 (Forward rotation torque limit/positive direction thrust limit) or parameter PA12 (Reverse rotation torque limit/negative direction thrust limit), whichever is larger, will be the maximum output voltage (8 V). Set the parameter on the assumption that the rated torque or continuous thrust is 100.0%. The parameter is for limiting the torque of the servo motor in the CW power running or CCW regeneration, or for limiting the thrust of the linear servo motor in the negative direction power running or positive direction regeneration. Set this parameter to "0.0" to generate no torque or thrust. The polarity of the torque limit can be changed depending on the setting values of parameter PA14 (Rotation direction selection/travel direction selection) and parameter PC29 (POL reflection selection at torque mode). This parameter corresponds to "Negative torque limit value (PNU: 24801, Sub: 0)". When this parameter is mapped for the Process Data communication, the value written with MR Configurator2 is overwritten with the controller. Thus, do not write a value with MR Configurator2.					—	—	✔

Tab. 7-12: *Detailed overview of parameters PA for MR-J4-TM (8)*

Number	Symbol	Initial value	Unit	Setting range	Network		
PA14	***POL**	**0**		**0, 1**	**ECT**	**EIP**	**PNT**

Rotation direction selection/travel direction selection ✔ ✔ ✔

This is used to select a rotation direction or travel direction.

You can enable or disable the following settings for the torque mode depending on the setting value of parameter PC29 (POL reflection selection at torque mode).

Servo motor rotation direction

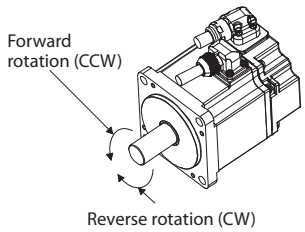

- At position mode/velocity mode

Setting value	Servo motor rotation direction/ linear servo motor travel direction	
	Position mode – Positioning address:	
	Increase	Decrease
	Velocity mode – Speed command:	
	Positive	Negative
0	CCW or positive direction	CW or negative direction
1	CW or negative direction	CCW or positive direction

- At torque mode

Parameter setting value		Servo motor rotation direction/travel direction	
		Torque mode – Torque command:	
PA14	PC29	Positive	Negative
0	0□□□: Enabled	CCW or positive direction	CW or negative direction
	1□□□: Disabled	CCW or positive direction	CW or negative direction
1	0□□□: Enabled	CW or negative direction	CCW or positive direction
	1□□□: Disabled	CCW or positive direction	CW or negative direction

The positive/negative directions of the linear servo motor are as follows.

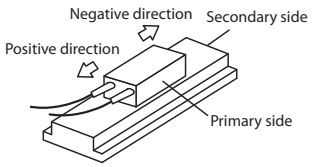

LM-H3/LM-F series

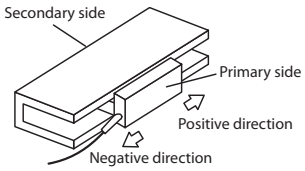

LM-U2 series

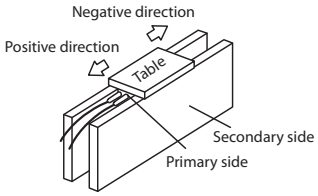

LM-K2 series

PA15	*ENR	4000	pulse/rev	1–4194304	ECT	EIP	PNT

Encoder output pulses ✔ ✔ ✔

Set the encoder output pulses from the servo amplifier by using the number of output pulses per revolution, dividing ratio, or electronic gear ratio (after multiplication by 4).

Selecting "Dividing ratio setting (□□1□)" of "Encoder output pulse setting selection" in parameter PC03 will divide the travel distance [pulse] of the linear encoder by the setting value.

To set a numerator of the electronic gear, select "A-phase/B-phase pulse electronic gear setting (□□3□)" of "Encoder output pulse setting selection" in parameter PC03.

The maximum output frequency is 4.6 Mpulses/s. Set the parameter within this range.

PA16	*ENR2	1		1–4194304	ECT	EIP	PNT

Encoder output pulses 2 ✔ ✔ ✔

Set a denominator of the electronic gear for the A/B-phase pulse output.

To set a denominator of the electronic gear, select "A-phase/B-phase pulse electronic gear setting (□□3□)" of "Encoder output pulse setting selection" in parameter PC03.

Selecting "Dividing ratio setting (□□1□)" of "Encoder output pulse setting selection" in parameter PC03 will disable the setting value.

Tab. 7-12: *Detailed overview of parameters PA for MR-J4-TM (9)*

Number	Symbol	Initial value	Unit	Setting range	Network		
PA17	****MSR**	**0000H**		**Refer to text**	**ECT**	**EIP**	**PNT**
Servo motor series setting When you use a linear servo motor, select its model from parameters PA17 and PA18. Set this and parameter PA18 at a time. Refer to the following table for settings.					✔	✔	✔

Linear servo motor series	Servo motor model (primary side)	Parameter setting	
		PA17	PA18
LM-H3	LM-H3P2A-07P-BSS0	00BBH	2101H
	LM-H3P3A-12P-CSS0		3101H
	LM-H3P3B-24P-CSS0		3201H
	LM-H3P3C-36P-CSS0		3301H
	LM-H3P3D-48P-CSS0		3401H
	LM-H3P7A-24P-ASS0		7101H
	LM-H3P7B-48P-ASS0		7201H
	LM-H3P7C-72P-ASS0		7301H
	LM-H3P7D-96P-ASS0		7401H
LM-U2	LM-U2PAB-05M-0SS0	00B4H	A201H
	LM-U2PAD-10M-0SS0		A401H
	LM-U2PAF-15M-0SS0		A601H
	LM-U2PBB-07M-1SS0		B201H
	LM-U2PBD-15M-1SS0		B401H
	LM-U2PBF-22M-1SS0		2601H
	LM-U2P2B-40M-2SS0		2201H
	LM-U2P2C-60M-2SS0		2301H
	LM-U2P2D-80M-2SS0		2401H
LM-F	LM-FP2B-06M-1SS0 ①	00B2H	2201H
	LM-FP2D-12M-1SS0 ①		2401H
	LM-FP2F-18M-1SS0 ①		2601H
	LM-FP4B-12M-1SS0 ①		4201H
	LM-FP4D-24M-1SS0 ①		4401H
	LM-FP4F-36M-1SS0 ①		4601H
	LM-FP4H-48M-1SS0 ①		4801H
	LM-FP5H-60M-1SS0 ①		5801H
	LM-FP2B-06M-1SS0 ②		2202H
	LM-FP2D-12M-1SS0 ②		2402H
	LM-FP2F-18M-1SS0 ②		2602H
	LM-FP4B-12M-1SS0 ②		4202H
	LM-FP4D-24M-1SS0 ②		4402H
	LM-FP4F-36M-1SS0 ②		4602H
	LM-FP4H-48M-1SS0 ②		4802H
	LM-FP5H-60M-1SS0 ②		5802H
LM-K2	LM-K2P1A-01M-2SS1	00B8H	1101H
	LM-K2P1C-03M-2SS1		1301H
	LM-K2P2A-02M-1SS1		2101H
	LM-K2P2C-07M-1SS1		2301H
	LM-K2P2E-12M-1SS1		2501H
	LM-K2P3C-14M-1SS1		3301H
	LM-K2P3E-24M-1SS1		3501H

Tab. 7-12: *Detailed overview of parameters PA for MR-J4-TM (10)*

① Natural cooling

② Liquid cooling

Number	Symbol	Initial value	Unit	Setting range	Network		
PA18	****MTY**	**0000H**		**Refer to text**	**ECT**	**EIP**	**PNT**
Servo motor type setting When you use a linear servo motor, select its model from parameter PA17 and PA18. Set this and parameter PA17 at a time. Refer to the table of parameter PA17 for settings.					✔	✔	✔
PA19	***BLK**	**00ABH**		**Refer to text**	**ECT**	**EIP**	**PNT**
Parameter writing inhibit Select a reference range and writing range of the parameter. Refer to the following table for settings.					✔	✔	✔

PA19	Setting operation	PA	PB	PC	PD	PE	PF	PL	PT	PN
Other than below	Reading	✔	—	—	—	—	—	—	—	—
	Writing	✔	—	—	—	—	—	—	—	—
000AH	Reading	Only 19	—	—	—	—	—	—	—	—
	Writing	Only 19	—	—	—	—	—	—	—	—
000BH	Reading	✔	✔	✔	—	—	—	—	—	—
	Writing	✔	✔	✔	—	—	—	—	—	—
000CH	Reading	✔	✔	✔	✔	—	—	—	—	—
	Writing	✔	✔	✔	✔	—	—	—	—	—
000FH	Reading	✔	✔	✔	✔	✔	—	✔	—	—
	Writing	✔	✔	✔	✔	✔	—	✔	—	—
00AAH	Reading	✔	✔	✔	✔	✔	✔	—	—	—
	Writing	✔	✔	✔	✔	✔	✔	—	—	—
00ABH (initial value)	Reading	✔	✔	✔	✔	✔	✔	✔	✔	✔
	Writing	✔	✔	✔	✔	✔	✔	✔	✔	✔
100BH	Reading	✔	—	—	—	—	—	—	—	—
	Writing	Only 19	—	—	—	—	—	—	—	—
100CH	Reading	✔	✔	✔	✔	—	—	—	—	—
	Writing	Only 19	—	—	—	—	—	—	—	—
100FH	Reading	✔	✔	✔	✔	✔	—	✔	—	—
	Writing	Only 19	—	—	—	—	—	—	—	—
10AAH	Reading	✔	✔	✔	✔	✔	✔	—	—	—
	Writing	Only 19	—	—	—	—	—	—	—	—
10ABH	Reading	✔	✔	✔	✔	✔	✔	✔	✔	✔
	Writing	Only 19	—	—	—	—	—	—	—	—

Tab. 7-12: *Detailed overview of parameters PA for MR-J4-TM (11)*

Number	Symbol	Initial value	Unit	Setting range	Network		
PA20	***TDS**	**0000H**		**Refer to text**	**ECT**	**EIP**	**PNT**
Tough drive setting Alarms may not be avoided with the tough drive function depending on the situations of the power supply and load fluctuation. You can assign MTTR (During tough drive) to the pins CN3-9, CN3-13 and CN3-15 with parameters PD07 to PD09. 0 _ _ 0							
For manufacturer setting 0□□0: Manufacturer setting					—	—	—
Vibration tough drive selection 0: Disabled 1: Enabled Selecting "1" enables to suppress vibrations by automatically changing setting values of parameters PB13 (Machine resonance suppression filter 1) and PB15 (Machine resonance suppression filter 2) in case that the vibration exceed the value of the oscillation level set in parameter PF23. The parameter will operate when parameters PB13 (Machine resonance suppression filter 1) and PB15 (Machine resonance suppression filter 2) are enabled. Refer to the instruction manual for details.					✔	✔	✔
SEMI-F47 function selection 0: Disabled 1: Enabled Selecting "1" enables to avoid occurring AL. 10 (Undervoltage) using the electrical energy charged in the capacitor in case that an instantaneous power failure occurs during operation. In parameter PF25 (SEMI-F47 function - Instantaneous power failure detection time), set the time period until the occurrence of AL. 10.1 (Voltage drop in the control circuit power).					✔	✔	✔

PA21	*AOP3	0001H		Refer to text	ECT	EIP	PNT
Function selection A-3 0 0 0 _							
One-touch tuning function selection 0: Disabled 1: Enabled When the digit is "0", the one-touch tuning will be disabled.					✔	✔	✔
For manufacturer setting 000: Manufacturer setting					—	—	—

Tab. 7-12: *Detailed overview of parameters PA for MR-J4-TM (12)*

Number	Symbol	Initial value	Unit	Setting range	Network		
PA22	****PCS**	**0000H**		**Refer to text**	**ECT**	**EIP**	**PNT**
Position control composition selection □0□0 For manufacturer setting □0□0: Manufacturer setting					—	—	—
Super trace control selection 0: Disabled 2: Enabled					✔	✔	✔
Scale measurement mode selection 0: Disabled 1: Used in absolute position detection system 2: Used in incremental system The absolute position detection system cannot be used while an incremental type encoder is used. Enabling absolute position detection system will trigger AL. 37 (Parameter error). Additionally, the setting is enabled only in the standard control mode. Setting other than "0" in other operation modes triggers AL. 37 (Parameter error). The setting of this digit is used by servo amplifier with software version B0 or later.					✔	✔	—
PA23	**DRAT**	**0000H**		**Refer to text**	**ECT**	**EIP**	**PNT**
Drive recorder arbitrary alarm trigger setting Alarm detail No. setting Set the digits when you execute the trigger with arbitrary alarm detail No. for the drive recorder function. When these digits are "0 0", only the arbitrary alarm No. setting will be enabled.					✔	✔	✔
Alarm No. setting Set the digits when you execute the trigger with arbitrary alarm No. for the drive recorder function. When "0 0" are set, arbitrary alarm trigger of the drive recorder will be disabled.					✔	✔	✔
Setting example: To activate the drive recorder when AL. 50 (Overload 1) occurs, set "5 0 0 0". To activate the drive recorder when AL. 50.3 (Thermal overload error 4 during operation) occurs, set "5 0 0 3".							
PA24	**AOP4**	**0000H**		**Refer to text**	**ECT**	**EIP**	**PNT**
Function selection A-4 0 0 0 □ Vibration suppression mode selection 0: Standard mode 1: 3 inertia mode 2: Low response mode When you select the standard mode or low response mode, "Vibration suppression control 2" is not available. When you select the 3 inertia mode, the feed forward gain is not available. Before changing the control mode with the controller during the 3 inertia mode or low response mode, stop the motor.					✔	✔	✔
For manufacturer setting 000: Manufacturer setting					—	—	—

Tab. 7-12: *Detailed overview of parameters PA for MR-J4-TM (13)*

Number	Symbol	Initial value	Unit	Setting range	Network		
PA25	**OTHOV**	**0**	**%**	**0–100**	**ECT**	**EIP**	**PNT**
One-touch tuning - Overshoot permissible level Set a permissible value of overshoot amount for one-touch tuning as a percentage of the in-position range. Setting "0" will be 50%.					✔	✔	✔
PA26	***AOP5**	**0000H**		**Refer to text**	**ECT**	**EIP**	**PNT**
Function selection A-5 0 0 0 □ Torque limit function selection at instantaneous power failure 0: Disabled 1: Enabled When an instantaneous power failure occurs during operation, the torque at acceleration is limited to save electric energy charged in the capacitor in the servo amplifier and the time until AL. 10.2 (Voltage drop in the main circuit power) occurs is extended with the instantaneous power failure tough drive function. Consequently, you can set a longer time in parameter PF25 (SEMI-F47 function - Instantaneous power failure detection time). The torque limit function at instantaneous power failure is enabled when "SEMI-F47 function selection" in parameter PA20 is "Enabled (□1□□)".					✔	✔	✔
For manufacturer setting 000: Manufacturer setting					—	—	—

Tab. 7-12: *Detailed overview of parameters PA for MR-J4-TM (14)*

7.7 Other parameters

Only the basic setting parameters PA□□ are described in this manual for beginners.

The Appendix shows more tables about

- Gain/filter parameters PB□□
  (Section A.1.3, section A.2.3, section A.3.3, A.4.3, section A.5.3 or section A.6.3)
- Extension setting parameters PC□□
  (Section A.1.4, section A.2.4, section A.3.4, section A.4.4, section A.5.4 or section A.6.4)
- I/O setting parameters PD□□
  (Section A.1.5, section A.2.5, section A.3.5, section A.4.5, section A.5.5 or section A.6.5)
- Extension 2 setting parameters PE□□
  (Section A.1.6, section A.2.6, section A.3.6, section A.4.6, section A.5.6 or section A.6.6)
- Extension 3 setting parameters PF□□
  (Section A.1.7, section A.2.7, section A.3.7, section A.4.7, section A.5.7 or section A.6.7)
- Linear servo motor/DD motor setting parameters PL□□
  (Section A.1.8, section A.2.8, section A.3.8, section A.4.8, section A.5.8 or section A.6.8)
- Option setting parameters Po□□
  (Section A.2.9)
- Positioning control parameters PT□□
  (Section A.2.10, section A.5.9 or section A.6.9)
- Network setting parameters PN□□
  (Section A.5.10 or section A.6.10)

Please refer to the respective instruction manual of the servo amplifier series MR-J4-A(-RJ), MR-J4-B(-RJ), MR-J4W-B, MR-J4-GF(-RJ) or MR-J4-TM for more detailed settings and descriptions of these parameters.

8 Troubleshooting

8.1 Alarm and warning list MR-J4-A(-RJ)

NOTES

Refer to "MELSERVO J4 Servo Amplifier Instruction Manual (Troubleshooting)" for details of alarms and warnings.

As soon as an alarm occurs, turn SON (Servo-on) off and interrupt the power.

AL. 37 (Parameter error) and warnings (except AL. F0 (Tough drive warning)) are not recorded in the alarm history.

When an error occurs during operation, the corresponding alarm and warning are displayed. When the alarm or the warning occurs, refer to "MELSERVO J4 Servo Amplifier Instruction Manual (Troubleshooting)" to remove the failure. When an alarm occurs, ALM will turn off.

8.1.1 Explanation of the lists

- No./Name/Detail No./Detail name

  Indicates each No./Name/Detail No./Detail name of alarms or warnings.

- Stop method

  For the alarms and warnings in which "SD" is written in the stop method column, the axis stops with the dynamic brake after forced stop deceleration. For the alarms and warnings in which "DB" or "EDB" is written in the stop method column, the servo motor stops with the dynamic brake without forced stop deceleration.

- Alarm deactivation

  After its cause has been removed, the alarm can be deactivated in any of the methods marked ✔ in the alarm deactivation column. Warnings are automatically cancelled after the cause of occurrence is removed. Alarms are deactivated with alarm reset or cycling the power.

Alarm deactivation	Explanation
Alarm reset	1. Turning on RES (Reset) with input device
	2. Pushing the "SET" button while the display of the servo amplifier is the current alarm display status
	3. Pushing the "Occurring Alarm Reset" button in the "Alarm Display" window of MR Configurator2
Cycling the power	Turning off the power and on again

Tab. 8-1: *Methods of alarm deactivation*

- Alarm code

  To output alarm codes, set parameter PD34 to "□□□1". Alarm codes are outputted by on/off of bit 0 to bit 2.
  Warnings (AL. 91 to AL. F3) do not have alarm codes. The alarm codes in the following table will be output when they occur. The alarm codes will not be output in normal condition.

  When using an MR-D01 extension IO unit, you can output alarm codes by setting parameter Po12 to "□□□1". Alarm codes are outputted by on/off of bit 0 to bit 3.

	No.	Alarm code				Name	Detail number	Detail name	Stop method ②, ③	Alarm deactivation	
		ACD3 (Bit 3)	ACD2 (Bit 2)	ACD1 (Bit 1)	ACD0 (Bit 0)					Alarm reset	Cycling the power
Alarm	10	0	0	1	0	Undervoltage	10.1	Voltage drop in the control circuit power	EDB	✔	✔
							10.2	Voltage drop in the main circuit power	SD	✔	✔
	11	—	—	—	—	Switch setting error	11.1	Axis number setting error/station number setting error	DB	—	✔
		—	—	—	—		11.2	Disabling control axis setting error	DB	—	✔
	12	0	0	0	0	Memory error 1 (RAM)	12.1	RAM error 1	DB	—	✔
							12.2	RAM error 2	DB	—	✔
							12.4	RAM error 4	DB	—	✔
							12.5	RAM error 5	DB	—	✔
		—	—	—	—		12.6	RAM error 6	DB	—	✔
	13	0	0	0	0	Clock error	13.1	Clock error 1	DB	—	✔
							13.2	Clock error 2	DB	—	✔
	14	0	0	0	0	Control process error	14.1	Control process error 1	DB	—	✔
							14.2	Control process error 2	DB	—	✔
							14.3	Control process error 3	DB	—	✔
							14.4	Control process error 4	DB	—	✔
							14.5	Control process error 5	DB	—	✔
							14.6	Control process error 6	DB	—	✔
							14.7	Control process error 7	DB	—	✔
							14.8	Control process error 8	DB	—	✔
							14.9	Control process error 9	DB	—	✔
							14.A	Control process error 10	DB	—	✔
		—	—	—	—		14.B	Control process error 11	DB	—	✔
	15	0	0	0	0	Memory error 2 (EEP-ROM)	15.1	EEP-ROM error at power on	DB	—	✔
							15.2	EEP-ROM error during operation	DB	—	✔
							15.4	Home position information read error	DB	—	✔

Tab. 8-2: *Alarm list of MR-J4-A(-RJ) (1)*

	No.	Alarm code				Name	Detail number	Detail name	Stop method ②, ③	Alarm deactivation	
		ACD3 (Bit 3)	ACD2 (Bit 2)	ACD1 (Bit 1)	ACD0 (Bit 0)					Alarm reset	Cycling the power
Alarm	16	0	1	1	0	Encoder initial communication error 1	16.1	Encoder initial communication - Receive data error 1	DB	—	✔
							16.2	Encoder initial communication - Receive data error 2	DB	—	✔
							16.3	Encoder initial communication - Receive data error 3	DB	—	✔
							16.5	Encoder initial communication - Transmission data error 1	DB	—	✔
							16.6	Encoder initial communication - Transmission data error 2	DB	—	✔
							16.7	Encoder initial communication - Transmission data error 3	DB	—	✔
							16.A	Encoder initial communication - Process error 1	DB	—	✔
							16.B	Encoder initial communication - Process error 2	DB	—	✔
							16.C	Encoder initial communication - Process error 3	DB	—	✔
							16.D	Encoder initial communication - Process error 4	DB	—	✔
							16.E	Encoder initial communication - Process error 5	DB	—	✔
							16.F	Encoder initial communication - Process error 6	DB	—	✔
	17	0	0	0	0	Board error	17.1	Board error 1	DB	—	✔
							17.3	Board error 2	DB	—	✔
							17.4	Board error 3	DB	—	✔
							17.5	Board error 4	DB	—	✔
							17.6	Board error 5	DB	—	✔
							17.7	Board error 6	DB	—	✔
							17.8	Board error 7	EDB	—	✔
		—	—	—	—		17.9	Board error 8	DB	—	✔
	19	0	0	0	0	Memory error 3 (FLASH-ROM)	19.1	FLASH-ROM error 1	DB	—	✔
							19.2	FLASH-ROM error 2	DB	—	✔
		—	—	—	—		19.3	FLASH-ROM error 3	DB	—	✔
	1A	0	1	1	0	Servo motor combination error	1A.1	Servo motor combination error 1	DB	—	✔
							1A.2	Servo motor control mode combination error	DB	—	✔
							1A.4	Servo motor combination error 2	DB	—	✔
	1B	0	0	1	0	Converter error	1B.1	Converter unit error	DB	—	✔
	1E	0	1	1	0	Encoder initial communication error 2	1E.1	Encoder malfunction	DB	—	✔
							1E.2	Load-side encoder malfunction	DB	—	✔
	1F	0	1	1	0	Encoder initial communication error 3	1F.1	Incompatible encoder	DB	—	✔
							1F.2	Incompatible load-side encoder	DB	—	✔

Tab. 8-2: *Alarm list of MR-J4-A(-RJ) (2)*

	No.	Alarm code				Name	Detail number	Detail name	Stop method ②, ③	Alarm deactivation	
		ACD3 (Bit 3)	ACD2 (Bit 2)	ACD1 (Bit 1)	ACD0 (Bit 0)					Alarm reset	Cycling the power
Alarm	20	0	1	1	0	Encoder normal communication error 1	20.1	Encoder normal communication - Receive data error 1	EDB	—	✔
							20.2	Encoder normal communication - Receive data error 2	EDB	—	✔
							20.3	Encoder normal communication - Receive data error 3	EDB	—	✔
							20.5	Encoder normal communication - Transmission data error 1	EDB	—	✔
							20.6	Encoder normal communication - Transmission data error 2	EDB	—	✔
							20.7	Encoder normal communication - Transmission data error 3	EDB	—	✔
							20.9	Encoder normal communication - Receive data error 4	EDB	—	✔
							20.A	Encoder normal communication - Receive data error 5	EDB	—	✔
	21	0	1	1	0	Encoder normal communication error 2	21.1	Encoder data error 1	EDB	—	✔
							21.2	Encoder data update error	EDB	—	✔
							21.3	Encoder data waveform error	EDB	—	✔
							21.4	Encoder non-signal error	EDB	—	✔
							21.5	Encoder hardware error 1	EDB	—	✔
							21.6	Encoder hardware error 2	EDB	—	✔
							21.9	Encoder data error 2	EDB	—	✔
	24	1	1	0	0	Main circuit error	24.1	Ground fault detected by hardware detection circuit	DB	—	✔
							24.2	Ground fault detected by software detection function	DB	✔	✔
	25	1	1	1	0	Absolute position erased	25.1	Servo motor encoder - Absolute position erased	DB	—	✔
							25.2	Scale measurement encoder - Absolute position erased	DB	—	✔
	27	1	1	1	0	Initial magnetic pole detection error	27.1	Initial magnetic pole detection - Abnormal termination	DB	✔	✔
							27.2	Initial magnetic pole detection - Time out error	DB	✔	✔
							27.3	Initial magnetic pole detection - Limit switch error	DB	✔	✔
							27.4	Initial magnetic pole detection - Estimated error	DB	✔	✔
							27.5	Initial magnetic pole detection - Position deviation error	DB	✔	✔
							27.6	Initial magnetic pole detection - Speed deviation error	DB	✔	✔
							27.7	Initial magnetic pole detection - Current error	DB	✔	✔
	28	0	1	1	0	Linear encoder error 2	28.1	Linear encoder - Environment error	EDB	—	✔

Tab. 8-2: *Alarm list of MR-J4-A(-RJ) (3)*

	No.	Alarm code				Name	Detail number	Detail name	Stop method ②, ③	Alarm deactivation	
		ACD3 (Bit 3)	ACD2 (Bit 2)	ACD1 (Bit 1)	ACD0 (Bit 0)					Alarm reset	Cycling the power
Alarm	2A	0	1	1	0	Linear encoder error 1	2A.1	Linear encoder error 1-1	EDB	—	✔
							2A.2	Linear encoder error 1-2	EDB	—	✔
							2A.3	Linear encoder error 1-3	EDB	—	✔
							2A.4	Linear encoder error 1-4	EDB	—	✔
							2A.5	Linear encoder error 1-5	EDB	—	✔
							2A.6	Linear encoder error 1-6	EDB	—	✔
							2A.7	Linear encoder error 1-7	EDB	—	✔
							2A.8	Linear encoder error 1-8	EDB	—	✔
	2B	1	1	1	0	Encoder counter error	2B.1	Encoder counter error 1	EDB	—	✔
							2B.2	Encoder counter error 2	EDB	—	✔
	30	0	0	0	1	Regenerative error	30.1	Regeneration heat error	DB	✔①	✔①
							30.2	Regeneration signal error	DB	✔①	✔①
							30.3	Regeneration feedback signal error	DB	✔①	✔①
	31	0	1	0	1	Overspeed	31.1	Abnormal motor speed	SD	✔	✔
	32	0	1	0	0	Overcurrent	32.1	Overcurrent detected at hardware detection circuit (during operation)	DB	—	✔
							32.2	Overcurrent detected at software detection function (during operation)	DB	✔	✔
							32.3	Overcurrent detected at hardware detection circuit (during a stop)	DB	—	✔
							32.4	Overcurrent detected at software detection function (during a stop)	DB	✔	✔
	33	1	0	0	1	Overvoltage	33.1	Main circuit voltage error	EDB	✔	✔
	34	—	—	—	—	SSCNET III receive error 1	34.1	SSCNET III receive data error	SD	✔	✔
		—	—	—	—		34.2	SSCNET III connector connection error	SD	✔	✔
		—	—	—	—		34.3	SSCNET III communication data error	SD	✔	✔
		—	—	—	—		34.4	Hardware error signal detection	SD	✔	✔
		—	—	—	—		34.5	SSCNET III receive data error (safety observation function)	SD	✔	✔
		—	—	—	—		34.6	SSCNET III communication data error (safety observation function)	SD	✔	✔
	35	1	1	0	1	Command frequency error	35.1	Command frequency error	SD	✔	✔
	36	—	—	—	—	SSCNET III receive error 2	36.1	Continuous communication data error	SD	✔	✔
		—	—	—	—		36.2	Continuous communication data error (safety observation function)	SD	✔	✔
	37	1	0	0	0	Parameter error	37.1	Parameter setting range error	DB	—	✔
							37.2	Parameter combination error	DB	—	✔
							37.3	Point table setting error	DB	—	✔
	39	0	0	0	0	Program error	39.1	Program error	DB	—	✔
							39.2	Instruction argument external error	DB	—	✔
							39.3	Register No. error	DB	—	✔
							39.4	Non-correspondence instruction error	DB	—	✔

Tab. 8-2: *Alarm list of MR-J4-A(-RJ) (4)*

	No.	Alarm code ACD3 (Bit 3)	ACD2 (Bit 2)	ACD1 (Bit 1)	ACD0 (Bit 0)	Name	Detail number	Detail name	Stop method ②, ③	Alarm deactivation Alarm reset	Cycling the power
Alarm	3A	0	0	0	0	Inrush current suppression circuit error	3A.1	Inrush current suppression circuit error	EDB	—	✔
	3D	—	—	—	—	Parameter setting error for driver communication	3D.1	Parameter combination error for driver communication on slave	DB	—	✔
		—	—	—	—		3D.2	Parameter combination error for driver communication on master	DB	—	✔
	3E	—	—	—	—	Operation mode error	3E.1	Operation mode error	DB	—	✔
		1	0	0	0		3E.6	Operation mode switch error	DB	—	✔
	42	0	1	1	0	Servo control error (for linear servo motor and direct drive motor)	42.1	Servo control error by position deviation	EDB	④	✔
							42.2	Servo control error by speed deviation	EDB	④	✔
							42.3	Servo control error by torque/thrust deviation	EDB	④	✔
						Fully closed loop control error (for fully closed loop control)	42.8	Fully closed loop control error by position deviation	EDB	④	✔
							42.9	Fully closed loop control error by speed deviation	EDB	④	✔
							42.A	Fully closed loop control error by position deviation during command stop	EDB	④	✔
	45	0	0	1	1	Main circuit device overheat ①	45.1	Main circuit device overheat error (1)	SD	✔①	✔①
							45.2 ⑤	Main circuit device overheat error 2	SD	✔①	✔①
	46	0	0	1	1	Servo motor overheat	46.1	Abnormal temperature of servo motor 1	SD	✔①	✔①
							46.2	Abnormal temperature of servo motor 2	SD	✔①	✔①
							46.3	Thermistor disconnected error	SD	✔①	✔①
							46.4	Thermistor circuit error	SD	✔①	✔①
							46.5	Abnormal temperature of servo motor 3	DB	✔①	✔①
							46.6	Abnormal temperature of servo motor 4	DB	✔①	✔①
	47	0	0	1	1	Cooling fan error	47.1	Cooling fan stop error	SD	—	✔
							47.2	Cooling fan speed reduction error	SD	—	✔
	50	0	0	1	1	Overload 1	50.1	Thermal overload error 1 during operation	SD	✔①	✔①
							50.2	Thermal overload error 2 during operation	SD	✔①	✔①
							50.3	Thermal overload error 4 during operation	SD	✔①	✔①
							50.4	Thermal overload error 1 during a stop	SD	✔①	✔①
							50.5	Thermal overload error 2 during a stop	SD	✔①	✔①
							50.6	Thermal overload error 4 during a stop	SD	✔①	✔①

Tab. 8-2: *Alarm list of MR-J4-A(-RJ) (5)*

	No.	Alarm code				Name	Detail number	Detail name	Stop method ②, ③	Alarm deactivation	
		ACD3 (Bit 3)	ACD2 (Bit 2)	ACD1 (Bit 1)	ACD0 (Bit 0)					Alarm reset	Cycling the power
Alarm	51	0	0	1	1	Overload 2 ①	51.1	Thermal overload error 3 during operation	DB	✔ ①	✔ ①
							51.2	Thermal overload error 3 during a stop	DB	✔ ①	✔ ①
	52	0	1	0	1	Error excessive	52.1	Excess droop pulse 1	SD	✔	✔
							52.3	Excess droop pulse 2	SD	✔	✔
							52.4	Error excessive during 0 torque limit	SD	✔	✔
							52.5	Excess droop pulse 3	EDB	✔	✔
	54	0	0	1	1	Oscillation detection	54.1	Oscillation detection error	EDB	✔	✔
	56	0	1	1	0	Forced stop error	56.2	Over speed during forced stop	EDB	✔	✔
							56.3	Estimated distance over during forced stop	EDB	✔	✔
	61	0	1	0	1	Operation error	61.1	Point table setting range error	DB	✔	✔
	63	0	1	1	0	STO timing error	63.1	STO1 off	DB	✔	✔
							63.2	STO2 off	DB	✔	✔
	64	1	0	0	0	Functional safety unit setting error	64.1	STO input error	DB	—	✔
							64.2	Compatibility mode setting error	DB	—	✔
							64.3	Operation mode setting error	DB	—	✔
	65	0	0	0	0	Functional safety unit connection error	65.1	Functional safety unit communication error 1	SD	—	✔
							65.2	Functional safety unit communication error 2	SD	—	✔
							65.3	Functional safety unit communication error 3	SD	—	✔
							65.4	Functional safety unit communication error 4	SD	—	✔
							65.5	Functional safety unit communication error 5	SD	—	✔
							65.6	Functional safety unit communication error 6	SD	—	✔
							65.7	Functional safety unit communication error 7	SD	—	✔
							65.8	Functional safety unit shut-off signal error 1	DB	—	✔
							65.9	Functional safety unit shut-off signal error 2	DB	—	✔

Tab. 8-2: *Alarm list of MR-J4-A(-RJ) (6)*

	No.	Alarm code				Name	Detail number	Detail name	Stop method ②, ③	Alarm deactivation	
		ACD3 (Bit 3)	ACD2 (Bit 2)	ACD1 (Bit 1)	ACD0 (Bit 0)					Alarm reset	Cycling the power
Alarm	66	0	1	1	0	Encoder initial communication error (safety observation function)	66.1	Encoder initial communication - Receive data error 1 (safety observation function)	DB	—	✔
							66.2	Encoder initial communication - Receive data error 2 (safety observation function)	DB	—	✔
							66.3	Encoder initial communication - Receive data error 3 (safety observation function)	DB	—	✔
							66.7	Encoder initial communication - Transmission data error 1 (safety observation function)	DB	—	✔
							66.9	Encoder initial communication - Process error 1 (safety observation function)	DB	—	✔
	67	0	1	1	0	Encoder normal communication error 1 (safety observation function)	67.1	Encoder normal communication - Receive data error 1 (safety observation function)	DB	—	✔
							67.2	Encoder normal communication - Receive data error 2 (safety observation function)	DB	—	✔
							67.3	Encoder normal communication - Receive data error 3 (safety observation function)	DB	—	✔
							67.4	Encoder normal communication - Receive data error 4 (safety observation function)	DB	—	✔
							67.7	Encoder normal communication - Transmission data error 1 (safety observation function)	DB	—	✔
	68	0	0	0	0	STO diagnosis error	68.1	Mismatched STO signal error	DB	—	✔
	69	—	—	—	—	Command error	69.1	Forward rotation-side software limit detection - Command excess error	SD	✔	✔
		—	—	—	—		69.2	Reverse rotation-side software limit detection - Command excess error	SD	✔	✔
		—	—	—	—		69.3	Forward rotation stroke end detection - Command excess error	SD	✔	✔
		—	—	—	—		69.4	Reverse rotation stroke end detection - Command excess error	SD	✔	✔
		—	—	—	—		69.5	Upper stroke limit detection - Command excess error	SD	✔	✔
		—	—	—	—		69.6	Lower stroke limit detection - Command excess error	SD	✔	✔

Tab. 8-2: *Alarm list of MR-J4-A(-RJ) (7)*

	No.	Alarm code				Name	Detail number	Detail name	Stop method ②, ③	Alarm deactivation	
		ACD3 (Bit 3)	ACD2 (Bit 2)	ACD1 (Bit 1)	ACD0 (Bit 0)					Alarm reset	Cycling the power
Alarm	70	0	1	1	0	Load-side encoder initial communication error 1	70.1	Load-side encoder initial communication - Receive data error 1	DB	—	✔
							70.2	Load-side encoder initial communication - Receive data error 2	DB	—	✔
							70.3	Load-side encoder initial communication - Receive data error 3	DB	—	✔
							70.5	Load-side encoder initial communication - Transmission data error 1	DB	—	✔
							70.6	Load-side encoder initial communication - Transmission data error 2	DB	—	✔
							70.7	Load-side encoder initial communication - Transmission data error 3	DB	—	✔
							70.A	Load-side encoder initial communication - Process error 1	DB	—	✔
							70.B	Load-side encoder initial communication - Process error 2	DB	—	✔
							70.C	Load-side encoder initial communication - Process error 3	DB	—	✔
							70.D	Load-side encoder initial communication - Process error 4	DB	—	✔
							70.E	Load-side encoder initial communication - Process error 5	DB	—	✔
							70.F	Load-side encoder initial communication - Process error 6	DB	—	✔
	71	0	1	1	0	Load-side encoder normal communication error 1	71.1	Load-side encoder normal communication - Receive data error 1	EDB	—	✔
							71.2	Load-side encoder normalcommunication - Receive data error 2	EDB	—	✔
							71.3	Load-side encoder normal communication - Receive data error 3	EDB	—	✔
							71.5	Load-side encoder normal communication - Transmission data error 1	EDB	—	✔
							71.6	Load-side encoder normal communication - Transmission data error 2	EDB	—	✔
							71.7	Load-side encoder normal communication - Transmission data error 3	EDB	—	✔
							71.9	Load-side encoder normal communication - Receive data error 4	EDB	—	✔
							71.A	Load-side encoder normal communication - Receive data error 5	EDB	—	✔
	72	0	1	1	0	Load-side encoder normal communication error 2	72.1	Load-side encoder data error 1	EDB	—	✔
							72.2	Load-side encoder data update error	EDB	—	✔
							72.3	Load-side encoder data waveform error	EDB	—	✔
							72.4	Load-side encoder non-signal error	EDB	—	✔
							72.5	Load-side encoder hardware error 1	EDB	—	✔
							72.6	Load-side encoder hardware error 2	EDB	—	✔
							72.9	Load-side encoder data error 2	EDB	—	✔

Tab. 8-2: *Alarm list of MR-J4-A(-RJ) (8)*

	No.	Alarm code				Name	Detail number	Detail name	Stop method ②, ③	Alarm deactivation	
		ACD3 (Bit 3)	ACD2 (Bit 2)	ACD1 (Bit 1)	ACD0 (Bit 0)					Alarm reset	Cycling the power
Alarm	74	—	—	—	—	Option card error 1	74.1	Option card error 1	DB	—	✔
		—	—	—	—		74.2	Option card error 2	DB	—	✔
		—	—	—	—		74.3	Option card error 3	DB	—	✔
		—	—	—	—		74.4	Option card error 4	DB	—	✔
		—	—	—	—		74.5	Option card error 5	DB	—	✔
	75	—	—	—	—	Option card error 2	75.3	Option card connection error	EDB	—	✔
		—	—	—	—		75.4	Option card disconnected	DB	—	✔
	79	1	1	1	1	Functional safety unit diagnosis error	79.1	Functional safety unit power voltage error	DB	✔ ⑤	✔
							79.2	Functional safety unit internal error	DB	—	✔
							79.3	Abnormal temperature of functional safety unit	SD	✔ ⑤	✔
							79.4	Servo amplifier error	SD	—	✔
							79.5	Input device error	SD	—	✔
							79.6	Output device error	SD	—	✔
							79.7	Mismatched input signal error	SD	—	✔
							79.8	Position feedback fixing error	DB	—	✔
	7A	1	0	0	0	Parameter setting error (safety observation function)	7A.1	Parameter verification error (safety observation function)	DB	—	✔
							7A.2	Parameter setting range error (safety observation function)	DB	—	✔
							7A.3	Parameter combination error (safety observation function)	DB	—	✔
							7A.4	Functional safety unit combination error (safety observation function)	DB	—	✔
	7B	0	1	1	0	Encoder diagnosis error (safety observation function)	7B.1	Encoder diagnosis error 1 (safety observation function)	DB	—	✔
							7B.2	Encoder diagnosis error 2 (safety observation function)	DB	—	✔
							7B.3	Encoder diagnosis error 3 (safety observation function)	DB	—	✔
							7B.4	Encoder diagnosis error 4 (safety observation function)	DB	—	✔
	7C	0	0	0	0	Functional safety unit communication diagnosis error (safety observation function)	7C.1	Functional safety unit communication setting error (safety observation function)	SD	✔ ⑤	✔
							7C.2	Functional safety unit communication data error (safety observation function)	SD	✔ ⑤	✔
	7D	1	1	1	1	Safety observation error	7D.1	Stop observation error	DB	✔ ③	✔
							7D.2	Speed observation error	DB	✔ ⑤	✔
	82	—	—	—	—	Master-slave operation error 1	82.1	Master-slave operation error 1	EDB	✔	✔
	84	—	—	—	—	Network module initialization error	84.1	Network module undetected error	DB	—	✔
							84.2	Network module initialization error 1	DB	—	✔
							84.3	Network module initialization error 2	DB	—	✔
	85	—	—	—	—	Network module error	85.1	Network module error 1	SD	—	✔
							85.2	Network module error 2	SD	—	✔
							85.3	Network module error 3	SD	—	✔

Tab. 8-2: *Alarm list of MR-J4-A(-RJ) (9)*

	No.	Alarm code				Name	Detail number	Detail name	Stop method ②, ③	Alarm deactivation	
		ACD3 (Bit 3)	ACD2 (Bit 2)	ACD1 (Bit 1)	ACD0 (Bit 0)					Alarm reset	Cycling the power
Alarm	86	—	—	—	—	Network communication error	86.1	Network communication error 1	SD	✔	✔
							86.2	Network communication error 2	SD	✔	✔
							86.3	Network communication error 3	SD	✔	✔
	8A	0	0	0	0	USB communication time-out error/serial communication time-out error/Modbus®/RTU communication time-out error	8A.1	USB communication time-out error/serial communication time-out error	SD	✔	✔
							8A.2	Modbus®/RTU communication time-out error	SD	✔	✔
	8D	—	—	—	—	CC-Link IE communication error	8D.1	CC-Link IE communication error 1	SD	✔	✔
							8D.2	CC-Link IE communication error 2	SD	✔	✔
							8D.3	Master station setting error 1	DB	✔	✔
							8D.5	Master station setting error 2	DB	—	✔
							8D.6	CC-Link IE communication error 3	SD	✔	✔
							8D.7	CC-Link IE communication error 4	SD	✔	✔
							8D.8	CC-Link IE communication error 5	SD	✔	✔
							8D.9	Synchronization error 1	SD	—	✔
							8D.A	Synchronization error 2	SD	—	✔
	8E	0	0	0	0	USB communication error/serial communication error/Modbus®/RTU communication error	8E.1	USB communication receive error/serial communication receive error	SD	✔	✔
							8E.2	USB communication checksum error/serial communication checksum error	SD	✔	✔
							8E.3	USB communication character error/serial communication character error	SD	✔	✔
							8E.4	USB communication command error/serial communication command error	SD	✔	✔
							8E.5	USB communication data number error/serial communication data number error	SD	✔	✔
							8E.6	Modbus®/RTU communication receive error	SD	✔	✔
							8E.7	Modbus®/RTU communication message frame error	SD	✔	✔
							8E.8	Modbus®/RTU communication CRC error	SD	✔	✔
	88888		—	—	—	Watchdog	8888._	Watchdog	SD	—	✔

Tab. 8-2: *Alarm list of MR-J4-A(-RJ) (10)*

① Leave for about 30 minutes of cooling time after removing the cause of occurrence.

② The following shows three stop methods of DB, EDB, and SD.

DB: Stops with dynamic brake. (Coasts for the servo amplifier without dynamic brake.)
Coasts for MR-J4-03A6(-RJ).
Note that EDB is applied when an alarm below occurs:
AL. 30.1, AL. 32.2, AL. 32.4, AL. 51.1, AL. 51.2

EDB: Electronic dynamic brake stop (available with specified servo motors)
Refer to the following table for the specified servo motors.
The stop method for other than the specified servo motors will be DB.

Series	Servo Motor
HG-KR	HG-KR053, HG-KR13, HG-KR23, HG-KR43
HG-MR	HG-MR053, HG-MR13, HG-MR23, HG-MR43
HG-SR	HG-SR51, HG-SR52
HG-AK	HG-AK0136, HG-AK0236, HG-AK0336

SD: Forced stop deceleration

③ This is applicable when parameter PA04 is set to the initial value. The stop system of SD can be changed to DB using parameter PA04.

④ The alarm can be canceled by setting as follows:
For the fully closed loop control: set parameter PE03 to "1□□□".
When a linear servo motor or direct drive motor is used: set parameter PL04 to "1□□□".

⑤ Reset this while all the safety observation functions are stopped.

	No.	Name	Detail number	Detail name	Stop method ②, ③
Warning	90	Home position return incomplete warning	90.1	Home position return incomplete	—
			90.2	Home position return abnormal termination	—
			90.5	Z-phase unpassed	—
	91	Servo amplifier overheat warning ①	91.1	Main circuit device overheat warning	—
	92	Battery cable disconnection warning	92.1	Encoder battery cable disconnection warning	—
			92.3	Battery degradation	—
	93	ABS data transfer warning	93.1	ABS data transfer requirement warning during magnetic pole detection	—
	95	STO warning	95.1	STO1 off detection	DB
			95.2	STO2 off detection	DB
			95.3	STO warning 1 (safety observation function)	DB
			95.4	STO warning 2 (safety observation function)	DB
			95.5	STO warning 3 (safety observation function)	DB
	96	Home position setting warning	96.1	In-position warning at home positioning	—
			96.2	Command input warning at home positioning	—
			96.3	Servo off warning at home positioning	—
			96.4	Home positioning warning during magnetic pole detection	—
	97	Program operation disabled/next station position warning	97.1	Program operation disabled warning	—
			97.2	Next station position warning	—
	98	Software limit warning	98.1	Forward rotation-side software stroke limit reached	—
			98.2	Reverse rotation-side software stroke limit reached	—
	99	Stroke limit warning	99.1	Forward rotation stroke end off	④
			99.2	Reverse rotation stroke end off	④
			99.4	Upper stroke limit off	—
			99.5	Lower stroke limit off	—
	9A	Optional unit input data error warning	9A.1	Optional unit input data sign error	—
			9A.2	Optional unit BCD input data error	—
	9B	Error excessive warning	9B.1	Excess droop pulse 1 warning	—
			9B.3	Excess droop pulse 2 warning	—
			9B.4	Error excessive warning during 0 torque limit	—
	9C	Converter warning	9C.1	Converter unit warning	—
	9D	CC-Link IE warning 1	9D.1	Station number switch change warning	—
			9D.2	Master station setting warning	—
			9D.3	Overlapping station number warning	—
			9D.4	Mismatched station number warning	—
	9E	CC-Link IE warning 2	9E.1	CC-Link IE communication warning	—
	9F	Battery warning	9F.1	Low battery	—
			9F.2	Battery degradation warning	—
	E0	Excessive regeneration warning	E0.1	Excessive regeneration warning	—

Tab. 8-3: *Warning list of MR-J4-A(-RJ) (1)*

	No.	Name	Detail number	Detail name	Stop method ②, ③
Warning	E1	Overload warning 1	E1.1	Thermal overload warning 1 during operation	—
			E1.2	Thermal overload warning 2 during operation	—
			E1.3	Thermal overload warning 3 during operation	—
			E1.4	Thermal overload warning 4 during operation	—
			E1.5	Thermal overload error 1 during a stop	—
			E1.6	Thermal overload error 2 during a stop	—
			E1.7	Thermal overload error 3 during a stop	—
			E1.8	Thermal overload error 4 during a stop	—
	E2	Servo motor overheat warning	E2.1	Servo motor temperature warning	—
	E3	Absolute position counter warning	E3.1	Multi-revolution counter travel distance excess warning	—
			E3.2	Absolute position counter warning	—
			E3.4	Absolute positioning counter EEP-ROM writing frequency warning	—
			E3.5	Encoder absolute positioning counter warning	—
	E4	Parameter warning	E4.1	Parameter setting range error warning	—
	E5	ABS time-out warning	E5.1	Time-out during ABS data transfer	—
			E5.2	ABSM off during ABS data transfer	—
			E5.3	SON off during ABS data transfer	—
	E6	Servo forced stop warning	E6.1	Forced stop warning	SD
			E6.2	SS1 forced stop warning 1 (safety observation function)	SD
			E6.3	SS1 forced stop warning 2 (safety observation function)	SD
	E7	Controller forced stop warning	E7.1	Controller forced stop input warning	SD
	E8	Cooling fan speed reduction warning	E8.1	Decreased cooling fan speed warning	—
			E8.2	Cooling fan stop	—
	E9	Main circuit off warning	E9.1	Servo-on signal on during main circuit off	DB
			E9.2	Bus voltage drop during low speed operation	DB
			E9.3	Ready-on signal on during main circuit off	DB
			E9.4	Converter unit forced stop	DB
	EA	ABS servo-on warning	EA.1	ABS servo-on warning	—
	EB	The other axis error warning	EB.1	The other axis error warning	DB
	EC	Overload warning 2	EC.1	Overload warning 2	—
	ED	Output watt excess warning	ED.1	Output watt excess warning	—
	F0	Tough drive warning	F0.1	Instantaneous power failure tough drive warning	—
			F0.3	Vibration tough drive warning	—
	F2	Drive recorder - Miswriting warning	F2.1	Drive recorder - Area writing time-out warning	—
			F2.2	Drive recorder - Data miswriting warning	—
	F3	Oscillation detection warning	F3.1	Oscillation detection warning	—
	F4	Positioning warning	F4.4	Target position setting range error warning	—
			F4.6	Acceleration time constant setting range error warning	—
			F4.7	Deceleration time constant setting range error warning	—
			F4.9	Home position return type error warning	—

Tab. 8-3: *Warning list of MR-J4-A(-RJ) (2)*

	No.	Name	Detail number	Detail name	Stop method ②, ③
Warning	F5	Simple cam function - Cam data mis-writing warning	F5.1	Cam data - Area writing time-out warning	—
			F5.2	Cam data - Area miswriting warning	—
			F5.3	Cam data checksum error	—
	F6	Simple cam function - Cam control warning	F6.1	Cam axis one cycle current value restoration failed	—
			F6.2	Cam axis feed current value restoration failed	—
			F6.3	Cam unregistered error	—
			F6.4	Cam control data setting range error	—
			F6.5	Cam No. external error	—
			F6.6	Cam control inactive	—
	F7	Machine diagnosis warning	F7.1	Vibration failure prediction warning	—
			F7.2	Friction failure prediction warning	—
			F7.3	Total travel distance failure prediction warning	—

Tab. 8-3: *Warning list of MR-J4-A(-RJ) (3)*

① Leave for about 30 minutes of cooling time after removing the cause of occurrence.

② The following shows two stop methods of DB and SD.
DB: Stops with dynamic brake. (Coasts for the servo amplifier without dynamic brake.) Coasts for MR-J4-03A6(-RJ).
SD: Forced stop deceleration

③ This is applicable when parameter PA04 is set to the initial value. The stop system of SD can be changed to DB using parameter PA04.

④ Quick stop or slow stop can be selected using parameter PD30.

8.2 Alarm and warning list MR-J4-B(-RJ) and MR-J4-GF(-RJ)

NOTES

Refer to "MELSERVO J4 Servo Amplifier Instruction Manual (Troubleshooting)" for details of alarms and warnings.

As soon as an alarm occurs, turn SON (Servo-on) off and interrupt the power.

AL. 37 (Parameter error) and warnings (except AL. F0 (Tough drive warning)) are not recorded in the alarm history.

Only MR-J4-GF(-RJ):
In the initial setting, AL. 8D.1 (CC-Link IE communication error 1) and AL. 8D.2 (CC-Link IE communication error 2) are not recorded in the alarm history. The alarms are recorded by setting parameter PN06 to "□□□1".

When an error occurs during operation, the corresponding alarm and warning are displayed. When the alarm or the warning occurs, refer to "MELSERVO J4 Servo Amplifier Instruction Manual (Troubleshooting)" to remove the failure. When an alarm occurs, ALM will turn off.

8.2.1 Explanation of the lists

- No./Name/Detail No./Detail name

  Indicates each No./Name/Detail No./Detail name of alarms or warnings.

- Stop method

  For the alarms and warnings in which "SD" is written in the stop method column, the servo motor stops with the dynamic brake after forced stop deceleration. For the alarms and warnings in which "DB" or "EDB" is written in the stop method column, the servo motor stops with the dynamic brake without forced stop deceleration.

- Alarm deactivation

  After its cause has been removed, the alarm can be deactivated in any of the methods marked ✔ in the alarm deactivation column. Warnings are automatically cancelled after the cause of occurrence is removed. Alarms are deactivated with alarm reset, CPU reset, or cycling the power.

Alarm deactivation	Explanation
Alarm reset	1. Reset command from controller
	2. Click "Occurring Alarm Reset" in the "Alarm Display" window of MR Configurator2
CPU reset	Resetting the controller itself
Cycling the power	Turning off the power and on again

Tab. 8-4: *Methods of alarm deactivation*

	No.	Name	Detail number	Detail name	Stop method ②, ③	Alarm deactivation		
						Alarm reset	CPU reset	Power off to on
Alarm	10	Undervoltage	10.1	Voltage drop in the control circuit power	EDB	✔	✔	✔
			10.2	Voltage drop in the main circuit power	SD	✔	✔	✔
	11	Switch setting error	11.1	Axis number setting error/ Station number setting error	DB	—	—	✔
			11.2	Disabling control axis setting error	DB	—		✔
	12	Memory error 1 (RAM)	12.1	RAM error 1	DB	—	—	✔
			12.2	RAM error 2	DB	—	—	✔
			12.3	RAM error 3	DB	—	—	✔
			12.4	RAM error 4	DB	—	—	✔
			12.5	RAM error 5	DB	—	—	✔
			12.6	RAM error 6	DB	—	—	✔
	13	Clock error	13.1	Clock error 1	DB	—	—	✔
			13.2	Clock error 2	DB	—	—	✔
	14	Control process error	14.1	Control process error 1	DB	—	—	✔
			14.2	Control process error 2	DB	—	—	✔
			14.3	Control process error 3	DB	—	—	✔
			14.4	Control process error 4	DB	—	—	✔
			14.5	Control process error 5	DB	—	—	✔
			14.6	Control process error 6	DB	—	—	✔
			14.7	Control process error 7	DB	—	—	✔
			14.8	Control process error 8	DB	—	—	✔
			14.9	Control process error 9	DB	—	—	✔
			14.A	Control process error 10	DB	—	—	✔
			14.B	Control process error 11	DB	—	—	✔
	15	Memory error 2 (EEP-ROM)	15.1	EEP-ROM error at power on	DB	—	—	✔
			15.2	EEP-ROM error during operation	DB	—	—	✔
			15.4	Home position information read error	DB	—	—	✔

Tab. 8-5: *Alarm list of MR-J4-B(-RJ) and MR-J4-GF(-RJ) (1)*

	No.	Name	Detail number	Detail name	Stop method ②, ③	Alarm deactivation		
						Alarm reset	CPU reset	Power off to on
Alarm	16	Encoder initial communication error 1	16.1	Encoder initial communication - Receive data error 1	DB	—	—	✔
			16.2	Encoder initial communication - Receive data error 2	DB	—	—	✔
			16.3	Encoder initial communication - Receive data error 3	DB	—	—	✔
			16.5	Encoder initial communication - Transmission data error 1	DB	—	—	✔
			16.6	Encoder initial communication - Transmission data error 2	DB	—	—	✔
			16.7	Encoder initial communication - Transmission data error 3	DB	—	—	✔
			16.A	Encoder initial communication - Process error 1	DB	—	—	✔
			16.B	Encoder initial communication - Process error 2	DB	—	—	✔
			16.C	Encoder initial communication - Process error 3	DB	—	—	✔
			16.D	Encoder initial communication - Process error 4	DB	—	—	✔
			16.E	Encoder initial communication - Process error 5	DB	—	—	✔
			16.F	Encoder initial communication - Process error 6	DB	—	—	✔
	17	Board error	17.1	Board error 1	DB	—	—	✔
			17.3	Board error 2	DB	—	—	✔
			17.4	Board error 3	DB	—	—	✔
			17.5	Board error 4	DB	—	—	✔
			17.6	Board error 5	DB	—	—	✔
			17.7	Board error 7	DB	—	—	✔
			17.8	Board error 6 ⑥	EDB	—	—	✔
			17.9	Board error 8	DB	—	—	✔
	19	Memory error 3 (FLASH-ROM)	19.1	Flash-ROM error 1	DB	—	—	✔
			19.2	Flash-ROM error 2	DB	—	—	✔
			19.3	Flash-ROM error 3	DB	—	—	✔
	1A	Servo motor combination error	1A.1	Servo motor combination error 1	DB	—	—	✔
			1A.2	Servo motor control mode combination error	DB	—	—	✔
			1A.4	Servo motor combination error 2	DB	—	—	✔
	1B	Converter error	1B.1	Converter unit error	DB	—	—	✔
	1E	Encoder initial communication error 2	1E.1	Encoder malfunction	DB	—	—	✔
			1E.2	Load-side encoder malfunction	DB	—	—	✔
	1F	Encoder initial communication error 3	1F.1	Incompatible encoder	DB	—	—	✔
			1F.2	Incompatible load-side encoder	DB	—	—	✔

Tab. 8-5: *Alarm list of MR-J4-B(-RJ) and MR-J4-GF(-RJ) (2)*

	No.	Name	Detail number	Detail name	Stop method ②, ③	Alarm deactivation		
						Alarm reset	CPU reset	Power off to on
Alarm	20	Encoder normal communication error 1	20.1	Encoder normal communication - Receive data error 1	EDB	—	—	✔
			20.2	Encoder normal communication - Receive data error 2	EDB	—	—	✔
			20.3	Encoder normal communication - Receive data error 3	EDB	—	—	✔
			20.5	Encoder normal communication - Transmission data error 1	EDB	—	—	✔
			20.6	Encoder normal communication - Transmission data error 2	EDB	—	—	✔
			20.7	Encoder normal communication - Transmission data error 3	EDB	—	—	✔
			20.9	Encoder normal communication - Receive data error 4	EDB	—	—	✔
			20.A	Encoder normal communication - Receive data error 5	EDB	—	—	✔
	21	Encoder normal communication error 2	21.1	Encoder data error 1	EDB	—	—	✔
			21.2	Encoder data update error	EDB	—	—	✔
			21.3	Encoder data waveform error	EDB	—	—	✔
			21.4	Encoder non-signal error	EDB	—	—	✔
			21.5	Encoder hardware error 1	EDB	—	—	✔
			21.6	Encoder hardware error 2	EDB	—	—	✔
			21.9	Encoder data error 2	EDB	—	—	✔
	24	Main circuit error	24.1	Ground fault detected by hardware detection circuit	DB	—	—	✔
			24.2	Ground fault detected by software detection function	DB	✔	✔	✔
	25	Absolute position erased	25.1	Servo motor encoder - Absolute position erased	DB	—	—	✔
			25.2	Scale measurement encoder - Absolute position erased	DB	—	—	✔
	27	Initial magnetic pole detection error	27.1	Initial magnetic pole detection - Abnormal termination	DB	—	—	✔
			27.2	Initial magnetic pole detection - Time out error	DB	—	—	✔
			27.3	Initial magnetic pole detection - Limit switch error	DB	—	—	✔
			27.4	Initial magnetic pole detection - Estimated error	DB	—	—	✔
			27.5	Initial magnetic pole detection - Position deviation error	DB	—	—	✔
			27.6	Initial magnetic pole detection - Speed deviation error	DB	—	—	✔
			27.7	Initial magnetic pole detection - Current error	DB	—	—	✔
	28	Linear encoder error 2	28.1	Linear encoder - Environment error	EDB	—	—	✔

Tab. 8-5: *Alarm list of MR-J4-B(-RJ) and MR-J4-GF(-RJ) (3)*

	No.	Name	Detail number	Detail name	Stop method ②, ③	Alarm deactivation		
						Alarm reset	CPU reset	Power off to on
Alarm	2A	Linear encoder error 1	2A.1	Linear encoder error 1-1	EDB	—	—	✔
			2A.2	Linear encoder error 1-2	EDB	—	—	✔
			2A.3	Linear encoder error 1-3	EDB	—	—	✔
			2A.4	Linear encoder error 1-4	EDB	—	—	✔
			2A.5	Linear encoder error 1-5	EDB	—	—	✔
			2A.6	Linear encoder error 1-6	EDB	—	—	✔
			2A.7	Linear encoder error 1-7	EDB	—	—	✔
			2A.8	Linear encoder error 1-8	EDB	—	—	✔
	2B	Encoder counter error	2B.1	Encoder counter error 1	EDB	—	—	✔
			2B.2	Encoder counter error 2	EDB	—	—	✔
	30	Regenerative error	30.1	Regeneration heat error	DB	✔①	✔①	✔①
			30.2	Regeneration signal error	DB	✔①	✔①	✔①
			30.3	Regeneration feedback signal error	DB	✔①	✔①	✔①
	31	Overspeed	31.1	Abnormal motor speed	SD	✔	✔	✔
	32	Overcurrent	32.1	Overcurrent detected at hardware detection circuit (during operation)	DB	—	—	✔
			32.2	Overcurrent detected at software detection function (during operation)	DB	✔	✔	✔
			32.3	Overcurrent detected at hardware detection circuit (during a stop)	DB	—	—	✔
			32.4	Overcurrent detected at software detection function (during a stop)	DB	✔	✔	✔
	33	Overvoltage	33.1	Main circuit voltage error	EDB	✔	✔	✔
	34	SSCNET III receive error 1	34.1	SSCNET III receive data error	SD	✔	✔⑤	✔
			34.2	SSCNET III connector connection error	SD	✔	✔	✔
			34.3	SSCNET III communication data error	SD	✔	✔	✔
			34.4	Hardware error signal detection	SD	✔	✔	✔
			34.5	SSCNET III receive data error (safety observation function)	SD	✔	✔	✔
			34.6	SSCNET III communication data error (safety observation function)	SD	✔	✔	✔
	35	Command frequency error	35.1	Command frequency error	SD	✔	✔	✔
	36	SSCNET III receive error 2	36.1	Continuous communication data error	SD	✔	✔	✔
			36.2	Continuous communication data error (safety observation function)	SD	✔	✔	✔
	37	Parameter error	37.1	Parameter setting range error	DB	—	✔	✔
			37.2	Parameter combination error	DB	—	✔	✔
			37.3	Point table setting error	DB	—	—	✔
	39	Program error	39.1	Program error	DB	—	—	✔
			39.2	Instruction argument external error	DB	—	—	✔
			39.3	Register No. error	DB	—	—	✔
			39.4	Non-correspondence instruction error	DB	—	—	✔
	3A	Inrush current suppression circuit error	3A.1	Inrush current suppression circuit error	EDB	—	—	✔
	3D	Parameter setting error for driver communication	3D.1	Parameter combination error for driver communication on slave	DB	—	—	✔
			3D.2	Parameter combination error for driver communication on master	DB	—	—	✔

Tab. 8-5: *Alarm list of MR-J4-B(-RJ) and MR-J4-GF(-RJ) (4)*

	No.	Name	Detail number	Detail name	Stop method ②, ③	Alarm deactivation		
						Alarm reset	CPU reset	Power off to on
Alarm	3E	Operation mode error	3E.1	Operation mode error	DB	—	✔	✔
			3E.6	Operation mode switch error	DB	—	—	✔
	42	Servo control error (for linear servo motor and direct drive motor)	42.1	Servo control error by position deviation	EDB	④	④	✔
			42.2	Servo control error by speed deviation	EDB	④	④	✔
			42.3	Servo control error by torque/thrust deviation	EDB	④	④	✔
		Fully closed loop control error (for fully closed loop control)	42.8	Fully closed loop control error by position deviation	EDB	④	④	✔
			42.9	Fully closed loop control error by position deviation	EDB	④	④	✔
			42.A	Fully closed loop control error by position deviation during command stop	EDB	④	④	✔
	45	Main circuit device overheat	45.1	Main circuit device overheat error 1	SD	✔①	✔①	✔①
			45.2	Main circuit device overheat error 2	SD	✔①	✔①	✔①
	46	Servo motor overheat	46.1	Abnormal temperature of servo motor 1	SD	✔①	✔①	✔①
			46.2	Abnormal temperature of servo motor 2	SD	✔①	✔①	✔①
			46.3	Thermistor disconnected error	SD	✔①	✔①	✔①
			46.4	Thermistor circuit error	SD	✔①	✔①	✔①
			46.5	Abnormal temperature of servo motor 3	DB	✔①	✔①	✔①
			46.6	Abnormal temperature of servo motor 4	DB	✔①	✔①	✔①
	47	Cooling fan error	47.1	Cooling fan stop error	SD	—	—	✔
			47.2	Cooling fan speed reduction error	SD	—	—	✔
	50	Overload 1	50.1	Thermal overload error 1 during operation	SD	✔①	✔①	✔①
			50.2	Thermal overload error 2 during operation	SD	✔①	✔①	✔①
			50.3	Thermal overload error 4 during operation	SD	✔①	✔①	✔①
			50.4	Thermal overload error 1 during a stop	SD	✔①	✔①	✔①
			50.5	Thermal overload error 2 during a stop	SD	✔①	✔①	✔①
			50.6	Thermal overload error 4 during a stop	SD	✔①	✔①	✔①
	51	Overload 2	51.1	Thermal overload error 3 during operation	DB	✔①	✔①	✔①
			51.2	Thermal overload error 3 during a stop	DB	✔①	✔①	✔①
	52	Error excessive	52.1	Excess droop pulse 1	SD	✔	✔	✔
			52.3	Excess droop pulse 2	SD	✔	✔	✔
			52.4	Error excessive during 0 torque limit	SD	✔	✔	✔
			52.5	Excess droop pulse 3	EDB	✔	✔	✔
	54	Oscillation detection	54.1	Oscillation detection error	EDB	✔	✔	✔
	56	Forced stop error	56.2	Over speed during forced stop	EDB	✔	✔	✔
			56.3	Estimated distance over during forced stop	EDB	✔	✔	✔
	61	Operation error	61.1	Point table setting range error	DB	✔	—	✔
	63	STO timing error	63.1	STO1 off	DB	✔	✔	✔
			63.2	STO2 off	DB	✔	✔	✔
			63.5	STO by functional safety unit	DB	✔	✔	✔
	64	Functional safety unit setting error	64.1	STO input error	DB	—	—	✔
			64.2	Compatibility mode setting error	DB	—	—	✔
			64.3	Operation mode setting error	DB	—	—	✔

Tab. 8-5: *Alarm list of MR-J4-B(-RJ) and MR-J4-GF(-RJ) (5)*

	No.	Name	Detail number	Detail name	Stop method ②, ③	Alarm deactivation		
						Alarm reset	CPU reset	Power off to on
Alarm	65	Functional safety unit connection error	65.1	Functional safety unit communication error 1	SD	—	—	✔
			65.2	Functional safety unit communication error 2	SD	—	—	✔
			65.3	Functional safety unit communication error 3	SD	—	—	✔
			65.4	Functional safety unit communication error 4	SD	—	—	✔
			65.5	Functional safety unit communication error 5	SD	—	—	✔
			65.6	Functional safety unit communication error 6	SD	—	—	✔
			65.7	Functional safety unit communication error 7	SD	—	—	✔
			65.8	Functional safety unit shut-off signal error 1	DB	—	—	✔
			65.9	Functional safety unit shut-off signal error 2	DB	—	—	✔
	66	Encoder initial communication error (safety observation function)	66.1	Encoder initial communication - Receive data error 1 (safety observation function)	DB	—	—	✔
			66.2	Encoder initial communication - Receive data error 2 (safety observation function)	DB	—	—	✔
			66.3	Encoder initial communication - Receive data error 3 (safety observation function)	DB	—	—	✔
			66.7	Encoder initial communication - Transmission data error 1 (safety observation function)	DB	—	—	✔
			66.9	Encoder initial communication - Process error 1 (safety observation function)	DB	—	—	✔
	67	Encoder normal communication error 1 (safety observation function)	67.1	Encoder normal communication - Receive data error 1 (safety observation function)	DB	—	—	✔
			67.2	Encoder normal communication - Receive data error 2 (safety observation function)	DB	—	—	✔
			67.3	Encoder normal communication - Receive data error 3 (safety observation function)	DB	—	—	✔
			67.4	Encoder normal communication - Receive data error 4 (safety observation function)	DB	—	—	✔
			67.7	Encoder normal communication - Transmission data error 1 (safety observation function)	DB	—	—	✔
	68	STO diagnosis error	68.1	Mismatched STO signal error	DB	—	—	✔

Tab. 8-5: *Alarm list of MR-J4-B(-RJ) and MR-J4-GF(-RJ) (6)*

	No.	Name	Detail number	Detail name	Stop method ②, ③	Alarm deactivation		
						Alarm reset	CPU reset	Power off to on
Alarm	69	Command error	69.1	Forward rotation-side software limit detection - Command excess error	SD	✔	✔	✔
			69.2	Reverse rotation-side software limit detection - Command excess error	SD	✔	✔	✔
			69.3	Forward rotation stroke end detection - Command excess error	SD	✔	✔	✔
			69.4	Reverse rotation stroke end detection - Command excess error	SD	✔	✔	✔
			69.5	Upper stroke limit detection - Command excess error	SD	✔	✔	✔
			69.6	Lower stroke limit detection - Command excess error	SD	✔	✔	✔
	70	Load-side encoder initial communication error 1	70.1	Load-side encoder initial communication - Receive data error 1	DB	—	—	✔
			70.2	Load-side encoder initial communication - Receive data error 2	DB	—	—	✔
			70.3	Load-side encoder initial communication - Receive data error 3	DB	—	—	✔
			70.5	Load-side encoder initial communication - Transmission data error 1	DB	—	—	✔
			70.6	Load-side encoder initial communication - Transmission data error 2	DB	—	—	✔
			70.7	Load-side encoder initial communication - Transmission data error 3	DB	—	—	✔
			70.A	Load-side encoder initial communication - Process error 1	DB	—	—	✔
			70.B	Load-side encoder initial communication - Process error 2	DB	—	—	✔
			70.C	Load-side encoder initial communication - Process error 3	DB	—	—	✔
			70.D	Load-side encoder initial communication - Process error 4	DB	—	—	✔
			70.E	Load-side encoder initial communication - Process error 5	DB	—	—	✔
			70.F	Load-side encoder initial communication - Process error 6	DB	—	—	✔
	71	Load-side encoder normal communication error 1	71.1	Load-side encoder normal communication - Receive data error 1	EDB	—	—	✔
			71.2	Load-side encoder normal communication - Receive data error 2	EDB	—	—	✔
			71.3	Load-side encoder normal communication - Receive data error 3	EDB	—	—	✔
			71.5	Load-side encoder normal communication - Transmission data error 1	EDB	—	—	✔
			71.6	Load-side encoder normal communication - Transmission data error 2	EDB	—	—	✔
			71.7	Load-side encoder normal communication - Transmission data error 3	EDB	—	—	✔
			71.9	Load-side encoder normal communication - Receive data error 4	EDB	—	—	✔
			71.A	Load-side encoder normal communication - Receive data error 5	EDB	—	—	✔

Tab. 8-5: *Alarm list of MR-J4-B(-RJ) and MR-J4-GF(-RJ) (7)*

	No.	Name	Detail number	Detail name	Stop method ②, ③	Alarm deactivation		
						Alarm reset	CPU reset	Power off to on
Alarm	72	Load-side encoder normal communication error 2	72.1	Load-side encoder data error 1	EDB	—	—	✔
			72.2	Load-side encoder data update error	EDB	—	—	✔
			72.3	Load-side encoder data waveform error	EDB	—	—	✔
			72.4	Load-side encoder non-signal error	EDB	—	—	✔
			72.5	Load-side encoder hardware error 1	EDB	—	—	✔
			72.6	Load-side encoder hardware error 2	EDB	—	—	✔
			72.9	Load-side encoder data error 2	EDB	—	—	✔
	74	Option card error 1	74.1	Option card error 1	DB	—	—	✔
			74.2	Option card error 2	DB	—	—	✔
			74.3	Option card error 3	DB	—	—	✔
			74.4	Option card error 4	DB	—	—	✔
			74.5	Option card error 5	DB	—	—	✔
	75	Option card error 2	75.3	Option card connection error	EDB	—	—	✔
			75.4	Option card disconnected	DB	—	—	✔
	79	Functional safety unit diagnosis error	79.1	Functional safety unit power voltage error	DB	✔⑦	—	✔
			79.2	Functional safety unit internal error	DB	—	—	✔
			79.3	Abnormal temperature of functional safety unit	SD	✔⑦	—	✔
			79.4	Servo amplifier error	SD	—	—	✔
			79.5	Input device error	SD	—	—	✔
			79.6	Output device error	SD	—	—	✔
			79.7	Mismatched input signal error	SD	—	—	✔
			79.8	Position feedback fixing error	DB	—	—	✔
	7A	Parameter setting error (safety observation function)	7A.1	Parameter verification error (safety observation function)	DB	—	—	✔
			7A.2	Parameter setting range error (safety observation function)	DB	—	—	✔
			7A.3	Parameter combination error (safety observation function)	DB	—	—	✔
			7A.4	Functional safety unit combination error (safety observation function)	DB	—	—	✔
	7B	Encoder diagnosis error (safety observation function)	7B.1	Encoder diagnosis error 1 (safety observation function)	DB	—	—	✔
			7B.2	Encoder diagnosis error 2 (safety observation function)	DB	—	—	✔
			7B.3	Encoder diagnosis error 3 (safety observation function)	DB	—	—	✔
			7B.4	Encoder diagnosis error 4 (safety observation function)	DB	—	—	✔
	7C	Functional safety unit communication diagnosis error (safety observation function)	7C.1	Functional safety unit communication setting error (safety observation function)	SD	✔⑦	✔	✔
			7C.2	Functional safety unit communication data error (safety observation function)	SD	✔⑦	✔	✔
	7D	Safety observation error	7D.1	Stop observation error	DB	✔③	—	✔
			7D.2	Speed observation error	DB	✔⑦	—	✔
	82	Master-slave operation error 1	82.1	Master-slave operation error 1	EDB	✔	✔	✔

Tab. 8-5: *Alarm list of MR-J4-B(-RJ) and MR-J4-GF(-RJ) (8)*

	No.	Name	Detail number	Detail name	Stop method ②, ③	Alarm deactivation		
						Alarm reset	CPU reset	Power off to on
Alarm	84	Network module initialization error	84.1	Network module undetected error	DB	—	—	✔
			84.1	Network module initialization error 1	DB	—	—	✔
			84.3	Network module initialization error 2	DB	—	—	✔
	85	Network module error	85.1	Network module error 1	SD	—	—	✔
			85.2	Network module error 2	SD	—	—	✔
			85.3	Network module error 3	SD	—	—	✔
	86	Network communication error	86.1	Network communication error 1	SD	✔	—	✔
			86.2	Network communication error 2	SD	✔	—	✔
			86.3	Network communication error 3	SD	✔	—	✔
	8A	USB communication time-out error/ serial communication time-out error/ Modbus®/RTU communication time-out error	8A.1	USB communication time-out error/ serial communication time-out error	SD	✔	✔	✔
			8A.2	Modbus®/RTU communication time-out error	SD	✔	✔	✔
	8D	CC-Link IE communication error	8D.1	CC-Link IE communication error 1	SD	✔	—	✔
			8D.2	CC-Link IE communication error 2	SD	✔	—	✔
			8D.3	Master station setting error 1	DB	✔	—	✔
			8D.5	Master station setting error 2	DB	—	—	✔
			8D.6	CC-Link IE communication error 3	SD	✔	—	✔
			8D.7	CC-Link IE communication error 4	SD	✔	—	✔
			8D.8	CC-Link IE communication error 5	SD	✔	—	✔
			8D.9	Synchronization error 1	SD	—	—	✔
			8D.A	Synchronization error 2	SD	—	—	✔
	8E	USB communication error/ serial communication error/ Modbus®/RTU communication error	8E.1	USB communication receive error/ serial communication receive error	SD	✔	✔	✔
			8E.2	USB communication checksum error/ serial communication checksum error	SD	✔	✔	✔
			8E.3	USB communication character error/ serial communication character error	SD	✔	✔	✔
			8E.4	USB communication command error/ serial communication command error	SD	✔	✔	✔
			8E.5	USB communication data number error/ serial communication data number error	SD	✔	✔	✔
			8E.6	Modbus®/RTU communication receive error	SD	✔	✔	✔
			8E.7	Modbus®/RTU communication message frame error	SD	✔	✔	✔
			8E.8	Modbus®/RTU communication CRC error	SD	✔	✔	✔
	888	Watchdog	88._	Watchdog	DB	—	—	✔

Tab. 8-5: *Alarm list of MR-J4-B(-RJ) and MR-J4-GF(-RJ) (9)*

① Leave for about 30 minutes of cooling time after removing the cause of occurrence.

② The following shows three stop methods of DB, EDB, and SD.

DB: Stops with dynamic brake. (Coasts for the servo amplifier without dynamic brake.)
Coasts for MR-J4-03A6(-RJ) and MR-J4W2-0303B6. Note that EDB is applied when an alarm below occurs; AL. 30.1, AL. 32.2, AL. 32.4, AL. 51.1, AL. 51.2, AL. 888

EDB: Electronic dynamic brake stop (available with specified servo motors)
Refer to the following table for the specified servo motors.
The stop method for other than the specified servo motors will be DB.

Series	Servo Motor
HG-KR	HG-KR053, HG-KR13, HG-KR23, HG-KR43
HG-MR	HG-MR053, HG-MR13, HG-MR23, HG-MR43
HG-SR	HG-SR51, HG-SR52
HG-AK	HG-AK0136/HG-AK0236/HG-AK0336

SD: Forced stop deceleration

③ This is applicable when parameter PA04 is set to the initial value. The stop system of SD can be changed to DB using parameter PA04.

④ The alarm can be cancelled by setting as follows:
- For the fully closed loop control: set parameter PE03 to "1□□□".
- When a linear servo motor or a direct drive motor is used: set parameter PL04 to "1□□□".

⑤ In some controller communication status, the alarm factor may not be removed.

⑥ This alarm will occur only in the J3 compatibility mode.

⑦ Reset this while all the safety observation functions are stopped.

	No.	Name	Detail number	Detail name	Stop method ②, ③
Warning	90	Home position return incomplete warning	90.1	Home position return incomplete	—
			90.2	Home position return abnormal termination	—
			90.5	Z-phase unpassed	—
	91	Servo amplifier overheat warning ①	91.1	Main circuit device overheat warning	—
	92	Battery cable disconnection warning	92.1	Encoder battery cable disconnection warning	—
			92.3	Battery degradation	—
	93	ABS data transfer warning	93.1	ABS data transfer requirement warning during magnetic pole detection	—
	95	STO warning	95.1	STO1 off detection	DB
			95.2	STO2 off detection	DB
			95.3	STO warning 1 (safety observation function)	DB
			95.4	STO warning 2 (safety observation function)	DB
			95.5	STO warning 3 (safety observation function)	DB
	96	Home position setting warning	96.1	In-position warning at home positioning	—
			96.2	Command input warning at home positioning	—
			96.3	Servo off warning at home positioning	—
			96.4	Home positioning warning during magnetic pole detection	—
	97	Positioning specification warning	97.1	Program operation disabled warning	—
			97.2	Next station position warning	—
	98	Software limit warning	98.1	Forward rotation-side software stroke limit reached	—
			98.2	Reverse rotation-side software stroke limit reached	—
	99	Stroke limit warning	99.1	Forward rotation stroke end off	④, ⑤
			99.2	Reverse rotation stroke end off	④, ⑤
			99.4	Upper stroke limit off	⑤
			99.5	Lower stroke limit off	⑤
	9A	Optional unit input data error warning	9A.1	Optional unit input data sign error	—
			9A.2	Optional unit BCD input data error	—
	9B	Error excessive warning	9B.1	Excess droop pulse 1 warning	—
			9B.3	Excess droop pulse 2 warning	—
			9B.4	Error excessive warning during 0 torque limit	—
	9C	Converter error	9C.1	Converter unit error	—
	9D	CC-Link IE warning 1	9D.1	Station number switch change warning	—
			9D.2	Master station setting warning	—
			9D.3	Overlapping station number warning	—
			9D.4	Mismatched station number warning	—
	9E	CC-Link IE warning 2	9E.1	CC-Link IE communication warning	—
	9F	Battery warning	9F.1	Low battery	—
			9F.2	Battery degradation warning	—
	E0	Excessive regeneration warning	E0.1	Excessive regeneration warning	—

Tab. 8-6: *Warning list of MR-J4-B(-RJ) and MR-J4-GF(-RJ) (1)*

	No.	Name	Detail number	Detail name	Stop method ②, ③
Warning	E1	Overload warning 1 ①	E1.1	Thermal overload warning 1 during operation	—
			E1.2	Thermal overload warning 2 during operation	—
			E1.3	Thermal overload warning 3 during operation	—
			E1.4	Thermal overload warning 4 during operation	—
			E1.5	Thermal overload error 1 during a stop	—
			E1.6	Thermal overload error 2 during a stop	—
			E1.7	Thermal overload error 3 during a stop	—
			E1.8	Thermal overload error 4 during a stop	—
	E2	Servo motor overheat warning	E2.1	Servo motor temperature warning	—
	E3	Absolute position counter warning	E3.1	Multi-revolution counter travel distance excess warning	—
			E3.2	Absolute position counter warning	—
			E3.4	Absolute positioning counter EEPROM writing frequency warning	—
			E3.5	Encoder absolute positioning counter warning	—
	E4	Parameter warning	E4.1	Parameter setting range error warning	—
	E5	ABS time-out warning	E5.1	Time-out during ABS data transfer	—
			E5.2	ABSM off during ABS data transfer	—
			E5.3	SON off during ABS data transfer	—
	E6	Servo forced stop warning	E6.1	Forced stop warning	SD
			E6.2	SS1 forced stop warning 1 (safety observation function)	SD
			E6.3	SS1 forced stop warning 2 (safety observation function)	SD
	E7	Controller forced stop warning	E7.1	Controller forced stop warning	SD
	E8	Cooling fan speed reduction warning	E8.1	Decreased cooling fan speed warning	—
			E8.2	Cooling fan stop	—
	E9	Main circuit off warning	E9.1	Servo-on signal on during main circuit off	DB
			E9.2	Bus voltage drop during low speed operation	DB
			E9.3	Ready-on signal on during main circuit off	DB
			E9.4	Converter unit forced stop	DB
	EA	ABS servo-on warning	EA.1	ABS servo-on warning	—
	EB	The other axis error warning	EB.1	The other axis error warning	DB
	EC	Overload warning 2	EC.1	Overload warning 2	—
	ED	Output watt excess warning	ED.1	Output watt excess warning	—
	F0	Tough drive warning	F0.1	Instantaneous power failure tough drive warning	—
			F0.3	Vibration tough drive warning	—
	F2	Drive recorder - Miswriting warning	F2.1	Drive recorder - Area writing time-out warning	—
			F2.2	Drive recorder - Data miswriting warning	—
	F3	Oscillation detection warning	F3.1	Oscillation detection warning	—
	F4	Positioning warning	F4.4	Target position setting range error warning	—
			F4.6	Acceleration time constant setting range error warning	—
			F4.7	Deceleration time constant setting range error warning	—
			F4.9	Home position return type error warning	—
	F5	Simple cam function - Cam data miswriting warning	F5.1	Cam data - Area writing time-out warning	—
			F5.2	Cam data - Area miswriting warning	—
			F5.3	Cam data checksum error	—

Tab. 8-6: *Warning list of MR-J4-B(-RJ) and MR-J4-GF(-RJ) (2)*

	No.	Name	Detail number	Detail name	Stop method ②, ③
	F6	Simple cam function - Cam control warning	F6.1	Cam axis one cycle current value restoration failed	—
			F6.2	Cam axis feed current value restoration failed	—
			F6.3	Cam unregistered error	—
			F6.4	Cam control data setting range error	—
			F6.5	Cam No. external error	—
			F6.6	Cam control inactive	—
	F7	Machine diagnosis warning	F7.1	Vibration failure prediction warning	—
			F7.2	Friction failure prediction warning	—
			F7.3	Total travel distance failure prediction warning	—

Tab. 8-6: *Warning list of MR-J4-B(-RJ) and MR-J4-GF(-RJ) (3)*

① Leave for about 30 minutes of cooling time after removing the cause of occurrence.

② The following shows two stop methods of DB and SD.
DB: Stops with dynamic brake. (Coasts for the servo amplifier without dynamic brake.)
Coasts for MR-J4-03A6(-RJ) and MR-J4W2-0303B6
SD: Forced stop deceleration

③ This is applicable when parameter PA04 is set to the initial value. The stop system of SD can be changed to DB using parameter PA04.

④ For MR-J4-A servo amplifier, quick stop or slow stop can be selected using parameter PD30.

⑤ For MR-J4-GF servo amplifier, quick stop or slow stop can be selected using parameter PD12. (I/O mode only)

8.3 Alarm and warning list MR-J4W-B

NOTES

Refer to "MELSERVO J4 Servo Amplifier Instruction Manual (Troubleshooting)" for details of alarms and warnings.

If an alarm which indicates each axis in the stop method column occurs, the axis without the alarm operates the servo motor as per normal.

As soon as an alarm occurs, turn SON (Servo-on) off and interrupt the power.

AL. 37 (Parameter error) and warnings are not recorded in the alarm history.

When an error occurs during operation, the corresponding alarm and warning are displayed. When the alarm or the warning occurs, refer to "MELSERVO J4 Servo Amplifier Instruction Manual (Troubleshooting)" to remove the failure. When an alarm occurs, ALM□ (Malfunction for □-axis) will turn off.

8.3.1 Explanation of the lists

- No./Name/Detail No./Detail name

  Indicates each No./Name/Detail No./Detail name of alarms or warnings.

- Processing system

  Processing system of alarms is as follows.
  Each axis: Alarm is detected for each axis.
  Common: Alarm is detected as the whole servo amplifier

- Stop system

  This means target axis to stop when the alarm occurs.
  Each axis: Only alarming axis will stop.
  All axes: All axes will stop.

- Stop method

  For the alarms and warnings in which "SD" is written in the stop method column, the axis stops with the dynamic brake after forced stop deceleration. For the alarms and warnings in which "DB" or "EDB" is written in the stop method column, the servo motor stops with the dynamic brake without forced stop deceleration

- Alarm deactivation

  After its cause has been removed, the alarm can be deactivated in any of the methods marked ✔ in the alarm deactivation column. Warnings are automatically cancelled after the cause of occurrence is removed. Alarms are deactivated with alarm reset, CPU reset, or cycling the power.

Alarm deactivation	Explanation
Alarm reset	1. Error reset command from controller
	2. Click "Occurring Alarm Reset" in the "Alarm Display" window of MR Configurator2
CPU reset	Resetting the controller itself
Cycling the power	Turning off the power and on again

Tab. 8-7: *Methods of alarm deactivation*

	No.	Name	Detail number	Detail name	Processing system ⑧	Stop system ⑧	Stop method ②, ③	Alarm deactivation		
								Alarm reset	CPU reset	Cycling the power
Alarm	10	Undervoltage	10.1	Voltage drop in the control circuit power	Common	All axes	EDB	✔	✔	✔
			10.2	Voltage drop in the main circuit power	Common	All axes	SD	✔	✔	✔
	11	Switch setting error	11.1	Axis number setting error	Common	All axes	DB	—	—	✔
			11.2	Disabling control axis setting error	Common	All axes	DB	—	—	✔
	12	Memory error 1 (RAM)	12.1	RAM error 1	Common	All axes	DB	—	—	✔
			12.2	RAM error 2	Common	All axes	DB	—	—	✔
			12.3	RAM error 3	Common	All axes	DB	—	—	✔
			12.4	RAM error 4	Common	All axes	DB	—	—	✔
			12.5	RAM error 5	Common	All axes	DB	—	—	✔
			12.6	RAM error 6	—	—	DB	—	—	✔
	13	Clock error	13.1	Clock error 1	Common	All axes	DB	—	—	✔
			13.2	Clock error 2	Common	All axes	DB	—	—	✔
	14	Control process error	14.1	Control process error 1	Common	All axes	DB	—	—	✔
			14.2	Control process error 2	Common	All axes	DB	—	—	✔
			14.3	Control process error 3	Common	All axes	DB	—	—	✔
			14.4	Control process error 4	Common	All axes	DB	—	—	✔
			14.5	Control process error 5	Common	All axes	DB	—	—	✔
			14.6	Control process error 6	Common	All axes	DB	—	—	✔
			14.7	Control process error 7	Common	All axes	DB	—	—	✔
			14.8	Control process error 8	Common	All axes	DB	—	—	✔
			14.9	Control process error 9	Common	All axes	DB	—	—	✔
			14.A	Control process error 10	Common	All axes	DB	—	—	✔
			14.B	Control process error 11	—	—	DB	—	—	✔
	15	Memory error 2 (EEP-ROM)	15.1	EEP-ROM error at power on	Common	All axes	DB	—	—	✔
			15.2	EEP-ROM error during operation	Common	All axes	DB	—	—	✔
			15.4	Home position information read error	—	—	DB	—	—	✔

Tab. 8-8: *Alarm list of MR-J4W-B (1)*

	No.	Name	Detail number	Detail name	Processing system ⑧	Stop system ⑧	Stop method ②, ③	Alarm deactivation		
								Alarm reset	CPU reset	Cycling the power
Alarm	16	Encoder initial communication error 1	16.1	Encoder initial communication - Receive data error 1	Each axis	Each axis	DB	—	—	✔
			16.2	Encoder initial communication - Receive data error 2	Each axis	Each axis	DB	—	—	✔
			16.3	Encoder initial communication - Receive data error 3	Each axis	Each axis	DB	—	—	✔
			16.5	Encoder initial communication - Transmission data error 1	Each axis	Each axis	DB	—	—	✔
			16.6	Encoder initial communication - Transmission data error 2	Each axis	Each axis	DB	—	—	✔
			16.7	Encoder initial communication - Transmission data error 3	Each axis	Each axis	DB	—	—	✔
			16.A	Encoder initial communication - Process error 1	Each axis	Each axis	DB	—	—	✔
			16.B	Encoder initial communication - Process error 2	Each axis	Each axis	DB	—	—	✔
			16.C	Encoder initial communication - Process error 3	Each axis	Each axis	DB	—	—	✔
			16.D	Encoder initial communication - Process error 4	Each axis	Each axis	DB	—	—	✔
			16.E	Encoder initial communication - Process error 5	Each axis	Each axis	DB	—	—	✔
			16.F	Encoder initial communication - Process error 6	Each axis	Each axis	DB	—	—	✔
	17	Board error	17.1	Board error 1	Common	All axes	DB	—	—	✔
			17.3	Board error 2	Common	All axes	DB	—	—	✔
			17.4	Board error 3	Common	All axes	DB	—	—	✔
			17.5	Board error 4	Common	All axes	DB	—	—	✔
			17.6	Board error 5	Common	All axes	DB	—	—	✔
			17.7	Board error 7	—	—	DB	—	—	✔
			17.8	Board error 6 ⑥	Common	All axes	EDB	—	—	✔
			17.9	Board error 8	—	—	DB	—	—	✔
	19	Memory error 3 (FLASH-ROM)	19.1	Flash-ROM error 1	Common	All axes	DB	—	—	✔
			19.2	Flash-ROM error 2	Common	All axes	DB	—	—	✔
			19.3	Flash-ROM error 3	—	—	DB	—	—	✔
	1A	Servo motor combination error	1A.1	Servo motor combination error 1	Each axis	Each axis	DB	—	—	✔
			1A.2	Servo motor control mode combination error	Each axis	Each axis	DB	—	—	✔
			1A.4	Servo motor combination error 2	Each axis	Each axis	DB	—	—	✔
	1B	Converter error	1B.1	Converter unit error	—	—	DB	—	—	✔
	1E	Encoder initial communication error 2	1E.1	Encoder malfunction	Each axis	Each axis	DB	—	—	✔
			1E.2	Load-side encoder malfunction	Each axis	Each axis	DB	—	—	✔
	1F	Encoder initial communication error 3	1F.1	Incompatible encoder	Each axis	Each axis	DB	—	—	✔
			1F.2	Incompatible load-side encoder	Each axis	Each axis	DB	—	—	✔

Tab. 8-8: *Alarm list of MR-J4W-B (2)*

	No.	Name	Detail number	Detail name	Processing system ⑧	Stop system ⑧	Stop method ②, ③	Alarm deactivation		
								Alarm reset	CPU reset	Cycling the power
Alarm	20	Encoder normal communication error 1	20.1	Encoder normal communication - Receive data error 1	Each axis	Each axis	EDB	—	—	✔
			20.2	Encoder normal communication - Receive data error 2	Each axis	Each axis	EDB	—	—	✔
			20.3	Encoder normal communication - Receive data error 3	Each axis	Each axis	EDB	—	—	✔
			20.5	Encoder normal communication - Transmission data error 1	Each axis	Each axis	EDB	—	—	✔
			20.6	Encoder normal communication - Transmission data error 2	Each axis	Each axis	EDB	—	—	✔
			20.7	Encoder normal communication - Transmission data error 3	Each axis	Each axis	EDB	—	—	✔
			20.9	Encoder normal communication - Receive data error 4	Each axis	Each axis	EDB	—	—	✔
			20.A	Encoder normal communication - Receive data error 5	Each axis	Each axis	EDB	—	—	✔
	21	Encoder normal communication error 2	21.1	Encoder data error 1	Each axis	Each axis	EDB	—	—	✔
			21.2	Encoder data update error	Each axis	Each axis	EDB	—	—	✔
			21.3	Encoder data waveform error	Each axis	Each axis	EDB	—	—	✔
			21.4	Encoder non-signal error	Each axis	Each axis	EDB	—	—	✔
			21.5	Encoder hardware error 1	Each axis	Each axis	EDB	—	—	✔
			21.6	Encoder hardware error 2	Each axis	Each axis	EDB	—	—	✔
			21.9	Encoder data error 2	Each axis	Each axis	EDB	—	—	✔
	24	Main circuit error	24.1	Ground fault detected by hardware detection circuit	Each axis	Each axis	DB	—	—	✔
			24.2	Ground fault detected by software detection function	Each axis	Each axis	DB	✔	✔	✔
	25	Absolute position erased	25.1	Servo motor encoder - Absolute position erased	Each axis	Each axis	DB	—	—	✔
			25.2	Scale measurement encoder - Absolute position erased	Each axis	Each axis	DB	—	—	✔
	27	Initial magnetic pole detection error	27.1	Initial magnetic pole detection - Abnormal termination	Each axis	Each axis	DB	✔	—	✔
			27.2	Initial magnetic pole detection - Time out error	Each axis	Each axis	DB	✔	—	✔
			27.3	Initial magnetic pole detection - Limit switch error	Each axis	Each axis	DB	✔	—	✔
			27.4	Initial magnetic pole detection - Estimated error	Each axis	Each axis	DB	✔	—	✔
			27.5	Initial magnetic pole detection - Position deviation error	Each axis	Each axis	DB	✔	—	✔
			27.6	Initial magnetic pole detection - Speed deviation error	Each axis	Each axis	DB	✔	—	✔
			27.7	Initial magnetic pole detection - Current error	Each axis	Each axis	DB	✔	—	✔
	28	Linear encoder error 2	28.1	Linear encoder - Environment error	Each axis	Each axis	EDB	—	—	✔

Tab. 8-8: *Alarm list of MR-J4W-B (3)*

	No.	Name	Detail number	Detail name	Processing system ⑧	Stop system ⑧	Stop method ②, ③	Alarm deactivation		
								Alarm reset	CPU reset	Cycling the power
Alarm	2A	Linear encoder error 1	2A.1	Linear encoder error 1-1	Each axis	Each axis	EDB	—	—	✔
			2A.2	Linear encoder error 1-2	Each axis	Each axis	EDB	—	—	✔
			2A.3	Linear encoder error 1-3	Each axis	Each axis	EDB	—	—	✔
			2A.4	Linear encoder error 1-4	Each axis	Each axis	EDB	—	—	✔
			2A.5	Linear encoder error 1-5	Each axis	Each axis	EDB	—	—	✔
			2A.6	Linear encoder error 1-6	Each axis	Each axis	EDB	—	—	✔
			2A.7	Linear encoder error 1-7	Each axis	Each axis	EDB	—	—	✔
			2A.8	Linear encoder error 1-8	Each axis	Each axis	EDB	—	—	✔
	2B	Encoder counter error	2B.1	Encoder counter error 1	Each axis	Each axis	EDB	—	—	✔
			2B.2	Encoder counter error 2	Each axis	Each axis	EDB	—	—	✔
	30	Regenerative error	30.1	Regeneration heat error	Common	All axes	DB	✔①	✔①	✔①
			30.2	Regeneration signal error	Common	All axes	DB	✔①	✔①	✔①
			30.3	Regeneration feedback signal error	Common	All axes	DB	✔①	✔①	✔①
	31	Overspeed	31.1	Abnormal motor speed	Each axis	Each axis	SD	✔	✔	✔
	32	Overcurrent	32.1	Overcurrent detected at hardware detection circuit (during operation)	Each axis	All axes	DB	—	—	✔
			32.2	Overcurrent detected at software detection function (during operation)	Each axis	All axes	DB	✔	✔	✔
			32.3	Overcurrent detected at hardware detection circuit (during a stop)	Each axis	All axes	DB	—	—	✔
			32.4	Overcurrent detected at software detection function (during a stop)	Each axis	All axes	DB	✔	✔	✔
	33	Overvoltage	33.1	Main circuit voltage error	Common	All axes	EDB	✔	✔	✔
	34	SSCNET III receive error 1	34.1	SSCNET III receive data error	Common	All axes	SD	✔	✔⑤	✔
			34.2	SSCNET III connector connection error	Common	All axes	SD	✔	✔	✔
			34.3	SSCNET III communication data error	Each axis	Each axis	SD	✔	✔	✔
			34.4	Hardware error signal detection	Common	All axes	SD	✔	✔	✔
			34.5	SSCNET III receive data error (safety observation function)	—	—	SD	✔	✔	✔
			34.6	SSCNET III communication data error (safety observation function)	—	—	SD	✔	✔	✔
	35	Command frequency error	35.1	Command frequency error	Each axis	Each axis	SD	✔	✔	✔
	36	SSCNET III receive error 2	36.1	Continuous communication data error	Each axis	Each axis	SD	✔	✔	✔
			36.2	Continuous communication data error (safety observation function)	—	—	SD	✔	✔	✔
	37	Parameter error	37.1	Parameter setting range error	Each axis	Each axis	DB	—	✔	✔
			37.2	Parameter combination error	Each axis	Each axis	DB	—	✔	✔
			37.3	Point table setting error	—	—	DB	—	—	✔
	39	Program error	39.1	Program error	—	—	DB	—	—	✔
			39.2	Instruction argument external error	—	—	DB	—	—	✔
			39.3	Register No. error	—	—	DB	—	—	✔
			39.4	Non-correspondence instruction error	—	—	DB	—	—	✔
	3A	Inrush current suppres-sion circuit error	3A.1	Inrush current suppression circuit error	Common	All axes	DB	—	—	✔

Tab. 8-8: *Alarm list of MR-J4W-B (4)*

	No.	Name	Detail number	Detail name	Processing system ⑧	Stop system ⑧	Stop method ②, ③	Alarm deactivation		
								Alarm reset	CPU reset	Cycling the power
Alarm	3D	Parameter setting error for driver communication	3D.1	Parameter combination error for driver communication on slave	—	—	DB	—	—	✔
			3D.2	Parameter combination error for driver communication on master	—	—	DB	—	—	✔
	3E	Operation mode error	3E.1	Operation mode error	Each axis	Each axis	DB	—	✔	✔
			3E.6	Operation mode switch error	—	—	DB	—	—	✔
	42	Servo control error (for linear servo motor and direct drive motor)	42.1	Servo control error by position deviation	Each axis	Each axis	EDB	④	④	✔
			42.2	Servo control error by speed deviation	Each axis	Each axis	EDB	④	④	✔
			42.3	Servo control error by torque/thrust deviation	Each axis	Each axis	EDB	④	④	✔
		Fully closed loop control error (for fully closed loop control)	42.8	Fully closed loop control error by position deviation	Each axis	Each axis	EDB	④	④	✔
			42.9	Fully closed loop control error by speed deviation	Each axis	Each axis	EDB	④	④	✔
			42.A	Fully closed loop control error by position deviation (during command stop)	Each axis	Each axis	EDB	④	④	✔
	45	Main circuit device overheat	45.1	Main circuit device overheat error 1	Common	All axes	SD	✔①	✔①	✔①
			45.2	Main circuit device overheat error 2	Common	All axes	SD	✔①	✔①	✔①
	46	Servo motor overheat	46.1	Abnormal temperature of servo motor 1	Each axis	Each axis	SD	✔①	✔①	✔①
			46.2	Abnormal temperature of servo motor 2	Each axis	Each axis	SD	✔①	✔①	✔①
			46.3	Thermistor disconnected error	Each axis	Each axis	SD	✔①	✔①	✔①
			46.4	Thermistor circuit error	Each axis	Each axis	SD	✔①	✔①	✔①
			46.5	Abnormal temperature of servo motor 3	Each axis	Each axis	DB	✔①	✔①	✔①
			46.6	Abnormal temperature of servo motor 4	Each axis	Each axis	DB	✔①	✔①	✔①
	47	Cooling fan error	47.1	Cooling fan stop error	Common	All axes	SD	—	—	✔
			47.2	Cooling fan speed reduction error	Common	All axes	SD	—	—	✔
	50	Overload 1	50.1	Thermal overload error 1 during operation	Each axis	Each axis	SD	✔①	✔①	✔①
			50.2	Thermal overload error 2 during operation	Each axis	Each axis	SD	✔①	✔①	✔①
			50.3	Thermal overload error 4 during operation	Each axis	Each axis	SD	✔①	✔①	✔①
			50.4	Thermal overload error 1 during a stop	Each axis	Each axis	SD	✔①	✔①	✔①
			50.5	Thermal overload error 2 during a stop	Each axis	Each axis	SD	✔①	✔①	✔①
			50.6	Thermal overload error 4 during a stop	Each axis	Each axis	SD	✔①	✔①	✔①
	51	Overload 2	51.1	Thermal overload error 3 during operation	Each axis	Each axis	DB	✔①	✔①	✔①
			51.2	Thermal overload error 3 during a stop	Each axis	Each axis	DB	✔①	✔①	✔①

Tab. 8-8: *Alarm list of MR-J4W-B (5)*

	No.	Name	Detail number	Detail name	Processing system ⑧	Stop system ⑧	Stop method ②, ③	Alarm deactivation		
								Alarm reset	CPU reset	Cycling the power
Alarm	52	Error excessive	52.1	Excess droop pulse 1	Each axis	Each axis	SD	✔	✔	✔
			52.3	Excess droop pulse 2	Each axis	Each axis	SD	✔	✔	✔
			52.4	Error excessive during 0 torque limit	Each axis	Each axis	SD	✔	✔	✔
			52.5	Excess droop pulse 3	Each axis	Each axis	DB	✔	✔	✔
	54	Oscillation detection	54.1	Oscillation detection error	Each axis	Each axis	DB	✔	✔	✔
	56	Forced stop error	56.2	Over speed during forced stop	Each axis	Each axis	EDB	✔	✔	✔
			56.3	Estimated distance over during forced stop	Each axis	Each axis	EDB	✔	✔	✔
	61	Operation error	61.1	Point table setting range error	—	—	DB	✔	—	✔
	63	STO timing error	63.1	STO1 off	Common	All axes	DB	✔	✔	✔
			63.2	STO2 off	Common	All axes	DB	✔	✔	✔
			63.5	STO by functional safety unit	—	—	DB	✔	✔	✔
	64	Functional safety unit setting error	64.1	STO input error	—	—	DB	—	—	✔
			64.2	Compatibility mode setting error	—	—	DB	—	—	✔
			64.3	Operation mode setting error	—	—	DB	—	—	✔
	65	Functional safety unit connection error	65.1	Functional safety unit communication error 1	—	—	SD	—	—	✔
			65.2	Functional safety unit communication error 2	—	—	SD	—	—	✔
			65.3	Functional safety unit communication error 3	—	—	SD	—	—	✔
			65.4	Functional safety unit communication error 4	—	—	SD	—	—	✔
			65.5	Functional safety unit communication error 5	—	—	SD	—	—	✔
			65.6	Functional safety unit communication error 6	—	—	SD	—	—	✔
			65.7	Functional safety unit communication error 7	—	—	SD	—	—	✔
			65.8	Functional safety unit shut-off signal error 1	—	—	DB	—	—	✔
			65.9	Functional safety unit shut-off signal error 2	—	—	DB	—	—	✔
	66	Encoder initial communication error (safety observation function)	66.1	Encoder initial communication - Receive data error 1 (safety observation function)	—	—	DB	—	—	✔
			66.2	Encoder initial communication - Receive data error 2 (safety observation function)	—	—	DB	—	—	✔
			66.3	Encoder initial communication - Receive data error 3 (safety observation function)	—	—	DB	—	—	✔
			66.7	Encoder initial communication - Transmission data error 1 (safety observation function)	—	—	DB	—	—	✔
			66.9	Encoder initial communication - Process error 1 (safety observation function)	—	—	DB	—	—	✔

Tab. 8-8: *Alarm list of MR-J4W-B (6)*

	No.	Name	Detail number	Detail name	Processing system ⑧	Stop system ⑧	Stop method ②, ③	Alarm deactivation		
								Alarm reset	CPU reset	Cycling the power
Alarm	67	Encoder normal communication error 1 (safety observation function)	67.1	Encoder normal communication - Receive data error 1 (safety observation function)	—	—	DB	—	—	✔
			67.2	Encoder normal communication - Receive data error 2 (safety observation function)	—	—	DB	—	—	✔
			67.3	Encoder normal communication - Receive data error 3 (safety observation function)	—	—	DB	—	—	✔
			67.4	Encoder normal communication - Receive data error 4 (safety observation function)	—	—	DB	—	—	✔
			67.7	Encoder normal communication - Transmission data error 1 (safety observation function)	—	—	DB	—	—	✔
	68	STO diagnosis error	68.1	Mismatched STO signal error	Common	Common	DB	—	—	✔
	69	Command error	69.1	Forward rotation-side software limit detection - Command excess error	—	—	SD	✔	✔	✔
			69.2	Reverse rotation-side software limit detection - Command excess error	—	—	SD	✔	✔	✔
			69.3	Forward rotation stroke end detection - Command excess error	—	—	SD	✔	✔	✔
			69.4	Reverse rotation stroke end detection - Command excess error	—	—	SD	✔	✔	✔
			69.5	Upper stroke limit detection - Command excess error	—	—	SD	✔	✔	✔
			69.6	Lower stroke limit detection - Command excess error	—	—	SD	✔	✔	✔
	70	Load-side encoder initial communication error 1	70.1	Load-side encoder initial communication - Receive data error 1	Each axis	Each axis	DB	—	—	✔
			70.2	Load-side encoder initial communication - Receive data error 2	Each axis	Each axis	DB	—	—	✔
			70.3	Load-side encoder initial communication - Receive data error 3	Each axis	Each axis	DB	—	—	✔
			70.5	Load-side encoder initial communication - Transmission data error 1	Each axis	Each axis	DB	—	—	✔
			70.6	Load-side encoder initial communication - Transmission data error 2	Each axis	Each axis	DB	—	—	✔
			70.7	Load-side encoder initial communication - Transmission data error 3	Each axis	Each axis	DB	—	—	✔
			70.A	Load-side encoder initial communication - Process error 1	Each axis	Each axis	DB	—	—	✔
			70.B	Load-side encoder initial communication - Process error 2	Each axis	Each axis	DB	—	—	✔
			70.C	Load-side encoder initial communication - Process error 3	Each axis	Each axis	DB	—	—	✔
			70.D	Load-side encoder initial communication - Process error 4	Each axis	Each axis	DB	—	—	✔
			70.E	Load-side encoder initial communication - Process error 5	Each axis	Each axis	DB	—	—	✔
			70.F	Load-side encoder initial communication - Process error 6	Each axis	Each axis	DB	—	—	✔

Tab. 8-8: *Alarm list of MR-J4W-B (7)*

	No.	Name	Detail number	Detail name	Processing system ⑧	Stop system ⑧	Stop method ②, ③	Alarm deactivation		
								Alarm reset	CPU reset	Cycling the power
Alarm	71	Load-side encoder normal communication error 1	71.1	Load-side encoder normal communication - Receive data error 1	Each axis	Each axis	EDB	—	—	✔
			71.2	Load-side encoder normal communication - Receive data error 2	Each axis	Each axis	EDB	—	—	✔
			71.3	Load-side encoder normal communication - Receive data error 3	Each axis	Each axis	EDB	—	—	✔
			71.5	Load-side encoder normal communication - Transmission data error 1	Each axis	Each axis	EDB	—	—	✔
			71.6	Load-side encoder normal communication - Transmission data error 2	Each axis	Each axis	EDB	—	—	✔
			71.7	Load-side encoder normal communication - Transmission data error 3	Each axis	Each axis	EDB	—	—	✔
			71.9	Load-side encoder normal communication - Receive data error 4	Each axis	Each axis	EDB	—	—	✔
			71.A	Load-side encoder normal communication - Receive data error 5	Each axis	Each axis	EDB	—	—	✔
	72	Load-side encoder normal communication error 2	72.1	Load-side encoder data error 1	Each axis	Each axis	EDB	—	—	✔
			72.2	Load-side encoder data update error	Each axis	Each axis	EDB	—	—	✔
			72.3	Load-side encoder data waveform error	Each axis	Each axis	EDB	—	—	✔
			72.4	Load-side encoder non-signal error	Each axis	Each axis	EDB	—	—	✔
			72.5	Load-side encoder hardware error 1	Each axis	Each axis	EDB	—	—	✔
			72.6	Load-side encoder hardware error 2	Each axis	Each axis	EDB	—	—	✔
			72.9	Load-side encoder data error 2	Each axis	Each axis	EDB	—	—	✔
	74	Option card error 1	74.1	Option card error 1	—	—	DB	—	—	✔
			74.2	Option card error 2	—	—	DB	—	—	✔
			74.3	Option card error 3	—	—	DB	—	—	✔
			74.4	Option card error 4	—	—	DB	—	—	✔
			74.5	Option card error 5	—	—	DB	—	—	✔
	75	Option card error 2	75.3	Option card connection error	—	—	EDB	—	—	✔
			75.4	Option card disconnected	—	—	DB	—	—	✔
	79	Functional safety unit diagnosis error	79.1	Functional safety unit power voltage error	—	—	DB	✔⑦	—	✔
			79.2	Functional safety unit internal error	—	—	DB	—	—	✔
			79.3	Abnormal temperature of functional safety unit	—	—	SD	✔⑦	—	✔
			79.4	Servo amplifier error	—	—	SD	—	—	✔
			79.5	Input device error	—	—	SD	—	—	✔
			79.6	Output device error	—	—	SD	—	—	✔
			79.7	Mismatched input signal error	—	—	SD	—	—	✔
			79.8	Position feedback fixing error	—	—	DB	—	—	✔
	7A	Parameter setting error (safety observation function)	7A.1	Parameter verification error (safety observation function)	—	—	DB	—	—	✔
			7A.2	Parameter setting range error (safety observation function)	—	—	DB	—	—	✔
			7A.3	Parameter combination error (safety observation function)	—	—	DB	—	—	✔
			7A.4	Functional safety unit combination error (safety observation function)	—	—	DB	—	—	✔

Tab. 8-8: *Alarm list of MR-J4W-B (8)*

	No.	Name	Detail number	Detail name	Processing system ⑧	Stop system ⑧	Stop method ②, ③	Alarm deactivation		
								Alarm reset	CPU reset	Cycling the power
Alarm	7B	Encoder diagnosis error (safety observation function)	7B.1	Encoder diagnosis error 1 (safety observation function)	—	—	DB	—	—	✔
			7B.2	Encoder diagnosis error 2 (safety observation function)	—	—	DB	—	—	✔
			7B.3	Encoder diagnosis error 3 (safety observation function)	—	—	DB	—	—	✔
			7B.4	Encoder diagnosis error 4 (safety observation function)	—	—	DB	—	—	✔
	7C	Functional safety unit communication diagnosis error (safety observation function)	7C.1	Functional safety unit communication cycle error (safety observation function)	—	—	SD	✔⑦	✔	✔
			7C.2	Functional safety unit communication data error (safety observation function)	—	—	SD	✔⑦	✔	✔
	7D	Safety observation error	7D.1	Stop observation error	—	—	DB	✔③	—	✔
			7D.2	Speed observation error	—	—	DB	✔⑦	—	✔
	82	Master-slave operation error 1	82.1	Master-slave operation error 1	—	—	EDB	✔	✔	✔
	84	Network module initialization error	84.1	Network module undetected error	—	—	DB	—	—	✔
			84.2	Network module initialization error 1	—	—	DB	—	—	✔
			84.3	Network module initialization error 2	—	—	DB	—	—	✔
	85	Network module error	85.1	Network module error 1	—	—	SD	—	—	✔
			85.2	Network module error 2	—	—	SD	—	—	✔
			85.3	Network module error 3	—	—	SD	—	—	✔
	86	Network communication error	86.1	Network communication error 1	—	—	SD	✔	—	✔
			86.2	Network communication error 2	—	—	SD	✔	—	✔
			86.3	Network communication error 3	—	—	SD	✔	—	✔
	8A	USB communication timeout error/serial communication time-out error/Modbus®/RTU communication time-out error	8A.1	USB communication time-out error/serial communication time-out error	Common	All axes	SD	✔	✔	✔
			8A.2	Modbus®/RTU communication time-out error	—	—	SD	✔	✔	✔
	8D	CC-Link IE communication error	8D.1	CC-Link IE communication error 1	—	—	SD	✔	—	✔
			8D.2	CC-Link IE communication error 2	—	—	SD	✔	—	✔
			8D.3	Master station setting error 1	—	—	DB	✔	—	✔
			8D.5	Master station setting error 2	—	—	DB	✔	—	✔
			8D.6	CC-Link IE communication error 3	—	—	SD	✔	—	✔
			8D.7	CC-Link IE communication error 4	—	—	SD	✔	—	✔
			8D.8	CC-Link IE communication error 5	—	—	SD	✔	—	✔
			8D.9	Synchronization error 1	—	—	SD	—	—	✔
			8D.A	Synchronization error 2	—	—	SD	—	—	✔

Tab. 8-8: *Alarm list of MR-J4W-B (9)*

	No.	Name	Detail number	Detail name	Processing system ⑧	Stop system ⑧	Stop method ②, ③	Alarm deactivation		
								Alarm reset	CPU reset	Cycling the power
Alarm	8E	USB communication error/serial communication error/Modbus®/RTU communication error	8E.1	USB communication receive error/serial communication receive error	Common	All axes	SD	✔	✔	✔
			8E.2	USB communication checksum error/serial communication checksum error	Common	All axes	SD	✔	✔	✔
			8E.3	USB communication character error/serial communication character error	Common	All axes	SD	✔	✔	✔
			8E.4	USB communication command error/serial communication command error	Common	All axes	SD	✔	✔	✔
			8E.5	USB communication data number error/serial communication data number error	Common	All axes	SD	✔	✔	✔
			8E.6	Modbus®/RTU communication receive error	—	—	SD	✔	✔	✔
			8E.7	Modbus®/RTU communication message frame error	—	—	SD	✔	✔	✔
			8E.8	Modbus®/RTU communication CRC error	—	—	SD	✔	✔	✔
	888	Watchdog	88._	Watchdog	Common	All axes	DB	—	—	✔

Tab. 8-8: *Alarm list of MR-J4W-B (10)*

① Leave for about 30 minutes of cooling time after removing the cause of occurrence.

② The following shows three stop methods of DB, EDB, and SD.

DB: Stops with dynamic brake. (Coasts for the servo amplifier without dynamic brake.)
Coasts for MR-J4-03A6(-RJ) and MR-J4W2-0303B6. Note that EDB is applied when an alarm below occurs; AL. 30.1, AL. 32.2, AL. 32.4, AL. 51.1, AL. 51.2, AL. 888

EDB: Electronic dynamic brake stop (available with specified servo motors)
Refer to the following table for the specified servo motors.
The stop method for other than the specified servo motors will be DB.

Series	Servo Motor
HG-KR	HG-KR053, HG-KR13, HG-KR23, HG-KR43
HG-MR	HG-MR053, HG-MR13, HG-MR23, HG-MR43
HG-SR	HG-SR51, HG-SR52
HG-AK	HG-AK0136, HG-AK0236, HG-AK0336

SD: Forced stop deceleration

③ This is applicable when parameter PA04 is set to the initial value. The stop system of SD can be changed to DB using parameter PA04.

④ The alarm can be cancelled by setting as follows:
- For the fully closed loop control: set parameter PE03 to "1□□□".
- When a linear servo motor or a direct drive motor is used: set parameter PL04 to "1□□□".

⑤ In some controller communication status, the alarm factor may not be removed.

⑥ This alarm will occur only in the J3 compatibility mode.

⑦ Reset this while all the safety observation functions are stopped.

⑧ The processing and stop systems are applicable only for the multi-axis servo amplifiers (MR-J4W-B). Refer to section 8.3.1 for details.

	No.	Name	Detail number	Detail name	Processing system ⑤	Stop system ⑤	Stop method ②, ③
Warning	90	Home position return incomplete warning	90.1	Home position return incomplete	—	—	—
			90.2	Home position return abnormal termination	—	—	—
			90.5	Z-phase unpassed	—	—	—
	91	Servo amplifier overheat warning ①	91.1	Main circuit device overheat warning	Common	—	—
	92	Battery cable disconnection warning	92.1	Encoder battery cable disconnection warning	Each axis	—	—
			92.3	Battery degradation	Each axis	—	—
	93	ABS data transfer warning	93.1	ABS data transfer requirement warning during magnetic pole detection	—	—	—
	95	STO warning	95.1	STO1 off detection	Common	All axes	DB
			95.2	STO2 off detection	Common	All axes	DB
			95.3	STO warning 1 (safety observation function)	—	—	DB
			95.4	STO warning 2 (safety observation function)	—	—	DB
			95.5	STO warning 3 (safety observation function)	—	—	DB
	96	Home position setting warning	96.1	In-position warning at home positioning	Each axis	—	—
			96.2	Command input warning at home positioning	Each axis	—	—
			96.3	Servo off warning at home positioning	—	—	—
			96.4	Home positioning warning during magnetic pole detection	—	—	—
	97	Positioning specification warning	97.1	Program operation disabled warning	—	—	—
			97.2	Next station position warning	—	—	—
	98	Software limit warning	98.1	Forward rotation-side software stroke limit reached	—	—	—
			98.2	Reverse rotation-side software stroke limit reached	—	—	—
	99	Stroke limit warning	99.1	Forward rotation stroke end off	—	—	④, ⑦
			99.2	Reverse rotation stroke end off	—	—	④, ⑦
			99.4	Upper stroke limit off	Each axis	—	⑦
			99.5	Lower stroke limit off	Each axis	—	⑦
	9A	Optional unit input data error warning	9A.1	Optional unit input data sign error	—	—	—
			9A.2	Optional unit BCD input data error	—	—	—
	9B	Error excessive warning	9B.1	Excess droop pulse 1 warning	Each axis	—	—
			9B.3	Excess droop pulse 2 warning	Each axis	—	—
			9B.4	Error excessive warning during 0 torque limit	Each axis	—	—
	9C	Converter error	9C.1	Converter unit error	—	—	—
	9D	CC-Link IE warning 1	9D.1	Station number switch change warning	—	—	—
			9D.2	Master station setting warning	—	—	—
			9D.3	Overlapping station number warning	—	—	—
			9D.4	Mismatched station number warning	—	—	—
	9E	CC-Link IE warning 2	9E.1	CC-Link IE communication warning	—	—	—
	9F	Battery warning	9F.1	Low battery	Each axis	—	—
			9F.2	Battery degradation warning	Each axis	—	—
	E0	Excessive regeneration warning	E0.1	Excessive regeneration warning	Common	—	—

Tab. 8-9: *Warning list of MR-J4W-B (1)*

	No.	Name	Detail number	Detail name	Processing system ⑤	Stop system ⑤	Stop method ②, ③
Warning	E1	Overload warning 1	E1.1	Thermal overload warning 1 during operation	Each axis	—	—
			E1.2	Thermal overload warning 2 during operation	Each axis	—	—
			E1.3	Thermal overload warning 3 during operation	Each axis	—	—
			E1.4	Thermal overload warning 4 during operation	Each axis	—	—
			E1.5	Thermal overload error 1 during a stop	Each axis	—	—
			E1.6	Thermal overload error 2 during a stop	Each axis	—	—
			E1.7	Thermal overload error 3 during a stop	Each axis	—	—
			E1.8	Thermal overload error 4 during a stop	Each axis	—	—
	E2	Servo motor overheat warning	E2.1	Servo motor temperature warning	Each axis	—	—
	E3	Absolute position counter warning	E3.1	Multi-revolution counter travel distance excess warning	—	—	—
			E3.2	Absolute position counter warning	Each axis	—	—
			E3.4	Absolute positioning counter EEPROM writing frequency warning	—	—	—
			E3.5	Encoder absolute positioning counter warning	Each axis	—	—
	E4	Parameter warning	E4.1	Parameter setting range error warning	Each axis	—	—
	E5	ABS time-out warning	E5.1	Time-out during ABS data transfer	—	—	—
			E5.2	ABSM off during ABS data transfer	—	—	—
			E5.3	SON off during ABS data transfer	—	—	—
	E6	Servo forced stop warning	E6.1	Forced stop warning	Common	All axes	SD
			E6.2	SS1 forced stop warning 1 (safety observation function)	—	—	SD
			E6.3	SS1 forced stop warning 2 (safety observation function)	—	—	SD
	E7	Controller forced stop warning	E7.1	Controller forced stop warning	Common	All axes	SD
	E8	Cooling fan speed reduction warning	E8.1	Decreased cooling fan speed warning	Common	—	—
			E8.2	Cooling fan stop	Common	—	—
	E9	Main circuit off warning	E9.1	Servo-on signal on during main circuit off	Common	All axes	DB
			E9.2	Bus voltage drop during low speed operation	Common	All axes	DB
			E9.3	Ready-on signal on during main circuit off	Common	All axes	DB
			E9.4	Converter unit forced stop	—	—	DB
	EA	ABS servo-on warning	EA.1	ABS servo-on warning	—	—	—
	EB	The other axis error warning	EB.1	The other axis error warning	Each axis	⑥	DB
	EC	Overload warning 2	EC.1	Overload warning 2	Each axis	—	—
	ED	Output watt excess warning	ED.1	Output watt excess warning	Each axis	—	—
	F0	Tough drive warning	F0.1	Instantaneous power failure tough drive warning	Each axis	—	—
			F0.3	Vibration tough drive warning	Each axis	—	—

Tab. 8-9: *Warning list of MR-J4W-B (2)*

	No.	Name	Detail number	Detail name	Processing system ⑤	Stop system ⑤	Stop method ②, ③
Warning	F2	Drive recorder - Miswriting warning	F2.1	Drive recorder - Area writing time-out warning	Common	—	—
			F2.2	Drive recorder - Data miswriting warning	Common	—	—
	F3	Oscillation detection warning	F3.1	Oscillation detection warning	Each axis	—	—
	F4	Positioning warning	F4.4	Target position setting range error warning	—	—	—
			F4.6	Acceleration time constant setting range error warning	—	—	—
			F4.7	Deceleration time constant setting range error warning	—	—	—
	F5	Simple cam function - Cam data miswriting warning	F5.1	Cam data - Area writing time-out warning	—	—	—
			F5.2	Cam data - Area miswriting warning	—	—	—
			F5.3	Cam data checksum error	—	—	—
	F6	Simple cam function - Cam control warning	F6.1	Cam axis one cycle current value restoration failed	—	—	—
			F6.2	Cam axis feed current value restoration failed	—	—	—
			F6.3	Cam unregistered error	—	—	—
			F6.4	Cam control data setting range error	—	—	—
			F6.5	Cam No. external error	—	—	—
			F6.6	Cam control inactive	—	—	—

Tab. 8-9: *Warning list of MR-J4W-B (3)*

① Leave for about 30 minutes of cooling time after removing the cause of occurrence.

② The following shows two stop methods of DB and SD.
DB: Stops with dynamic brake. (Coasts for the servo amplifier without dynamic brake.) Coasts for MR-J4-03A6(-RJ) and MR-J4W2-0303B6.
SD: Forced stop deceleration

③ This is applicable when parameter PA04 is set to the initial value. The stop system of SD can be changed to DB using parameter PA04.

④ For MR-J4-A servo amplifier, quick stop or slow stop can be selected using parameter PD30.

⑤ The processing and stop systems are applicable only for the multi-axis servo amplifiers (MR-J4W-B). Refer to section 8.3.1 for details.

⑥ As the initial value, it is applicable only for AL. 24 and AL. 32. All-axis stop can be selected using parameter PF02.

⑦ For MR-J4-GF servo amplifier, quick stop or slow stop can be selected using parameter PD12. (I/O mode only).

8.4 Alarm and warning list MR-J4-TM

NOTES

This chapter explains the details of alarms and warnings exclusively for the MR-J4-TM. For any other alarms and warnings, refer to MR-J4-GF and others in the sections 8.1, 8.2 or 8.3 or in the MELSERVO-J4 Servo Amplifier Instruction Manual (Troubleshooting).

As soon as an alarm occurs, turn SON (Servo-on) off and interrupt the power.

AL. 37 (Parameter error) and warnings (except AL. F0 (Tough drive warning)) are not recorded in the alarm history.

When an error occurs during operation, the corresponding alarm and warning are displayed. When the alarm or the warning occurs, refer to "MELSERVO J4 Servo Amplifier Instruction Manual (Troubleshooting)" to remove the failure. When an alarm occurs, ALM will turn off.

8.4.1 Explanation of the lists

- No./Name/Detail No./Detail name

  Indicates each No./Name/Detail No./Detail name of alarms or warnings.

- Stop method

  For the alarms and warnings in which "SD" is written in the stop method column, the servo motor stops with the dynamic brake after forced stop deceleration. For the alarms and warnings in which "DB" or "EDB" is written in the stop method column, the servo motor stops with the dynamic brake without forced stop deceleration.

- Alarm deactivation

  After its cause has been removed, the alarm can be deactivated in any of the methods marked ✔ in the alarm deactivation column. Warnings are automatically cancelled after the cause of occurrence is removed. Alarms are deactivated with alarm reset, communication reset (network), or cycling the power.

Alarm deactivation	Explanation
Alarm reset	1. Reset command from controller
	2. Click "Occurring Alarm Reset" in the "Alarm Display" window of MR Configurator2
Communication reset (Network)	1. Disconnect the computer from the network. For details of the disconnection methods, refer to the MR-J4-TM Servo Amplifier Instruction Manual for each communication method. 2. After the network communication from the controller has been shifted to the initial state, connect it again.
Cycling the power	Turning off the power and on again

Tab. 8-10: *Methods of alarm deactivation*

	No.	Name	Detail number	Detail name	Stop method ②, ③	Alarm deactivation		
						Alarm reset	Communication reset	Power off to on
Alarm	10	Undervoltage	10.1	Voltage drop in the control circuit power	EDB	✔	✔	✔
			10.2	Voltage drop in the main circuit power	SD	✔	✔	✔
	12	Memory error 1 (RAM)	12.1	RAM error 1	DB	—	—	✔
			12.2	RAM error 2	DB	—	—	✔
			12.3	RAM error 3	DB	—	—	✔
			12.4	RAM error 4	DB	—	—	✔
			12.5	RAM error 5	DB	—	—	✔
	13	Clock error	13.1	Clock error 1	DB	—	—	✔
			13.2	Clock error 2	DB	—	—	✔
	14	Control process error	14.1	Control process error 1	DB	—	—	✔
			14.2	Control process error 2	DB	—	—	✔
			14.3	Control process error 3	DB	—	—	✔
			14.4	Control process error 4	DB	—	—	✔
			14.5	Control process error 5	DB	—	—	✔
			14.6	Control process error 6	DB	—	—	✔
			14.7	Control process error 7	DB	—	—	✔
			14.8	Control process error 8	DB	—	—	✔
			14.9	Control process error 9	DB	—	—	✔
			14.A	Control process error 10	DB	—	—	✔
	15	Memory error 2 (EEP-ROM)	15.1	EEP-ROM error at power on	DB	—	—	✔
			15.2	EEP-ROM error during operation	DB	—	—	✔
			15.4	Home position information read error	DB	—	—	✔
	16	Encoder initial communication error 1	16.1	Encoder initial communication - Receive data error 1	DB	—	—	✔
			16.2	Encoder initial communication - Receive data error 2	DB	—	—	✔
			16.3	Encoder initial communication - Receive data error 3	DB	—	—	✔
			16.5	Encoder initial communication - Transmission data error 1	DB	—	—	✔
			16.6	Encoder initial communication - Transmission data error 2	DB	—	—	✔
			16.7	Encoder initial communication - Transmission data error 3	DB	—	—	✔
			16.A	Encoder initial communication - Process error 1	DB	—	—	✔
			16.B	Encoder initial communication - Process error 2	DB	—	—	✔
			16.C	Encoder initial communication - Process error 3	DB	—	—	✔
			16.D	Encoder initial communication - Process error 4	DB	—	—	✔
			16.E	Encoder initial communication - Process error 5	DB	—	—	✔
			16.F	Encoder initial communication - Process error 6	DB	—	—	✔

Tab. 8-11: *Alarm list of MR-J4-TM (1)*

	No.	Name	Detail number	Detail name	Stop method ②, ③	Alarm deactivation		
						Alarm reset	Communication reset	Power off to on
Alarm	17	Board error	17.1	Board error 1	DB	—	—	✔
			17.3	Board error 2	DB	—	—	✔
			17.4	Board error 3	DB	—	—	✔
			17.7	Board error 7	DB	—	—	✔
	19	Memory error 3 (FLASH-ROM)	19.1	Flash-ROM error 1	DB	—	—	✔
			19.2	Flash-ROM error 2	DB	—	—	✔
	1A	Servo motor combination error	1A.1	Servo motor combination error	DB	—	—	✔
			1A.2	Servo motor control mode combination error	DB	—	—	✔
			1A.4	Servo motor combination error 2	DB	—	—	✔
	1E	Encoder initial communication error 2	1E.1	Encoder malfunction	DB	—	—	✔
			1E.2	Load-side encoder malfunction	DB	—	—	✔
	1F	Encoder initial communication error 3	1F.1	Incompatible encoder	DB	—	—	✔
			1F.2	Incompatible load-side encoder	DB	—	—	✔
	20	Encoder normal communication error 1	20.1	Encoder normal communication - Receive data error 1	EDB	—	—	✔
			20.2	Encoder normal communication - Receive data error 2	EDB	—	—	✔
			20.3	Encoder normal communication - Receive data error 3	EDB	—	—	✔
			20.5	Encoder normal communication - Transmission data error 1	EDB	—	—	✔
			20.6	Encoder normal communication - Transmission data error 2	EDB	—	—	✔
			20.7	Encoder normal communication - Transmission data error 3	EDB	—	—	✔
			20.9	Encoder normal communication - Receive data error 4	EDB	—	—	✔
			20.A	Encoder normal communication - Receive data error 5	EDB	—	—	✔
	21	Encoder normal communication error 2	21.1	Encoder data error 1	EDB	—	—	✔
			21.2	Encoder data update error	EDB	—	—	✔
			21.3	Encoder data waveform error	EDB	—	—	✔
			21.4	Encoder non-signal error	EDB	—	—	✔
			21.5	Encoder hardware error 1	EDB	—	—	✔
			21.6	Encoder hardware error 2	EDB	—	—	✔
			21.9	Encoder data error 2	EDB	—	—	✔
	24	Main circuit error	24.1	Ground fault detected by hardware detection circuit	DB	—	—	✔
			24.2	Ground fault detected by software detection function	DB	✔	✔	✔
	25	Absolute position erased	25.1	Servo motor encoder - Absolute position erased	DB	—	—	✔
			25.2	Scale measurement encoder - Absolute position erased	DB	—	—	✔

Tab. 8-11: *Alarm list of MR-J4-TM (2)*

	No.	Name	Detail number	Detail name	Stop method ②, ③	Alarm deactivation		
						Alarm reset	Communication reset	Power off to on
Alarm	27	Initial magnetic pole detection error	27.1	Initial magnetic pole detection - Abnormal termination	DB	—	—	✔
			27.2	Initial magnetic pole detection - Time out error	DB	—	—	✔
			27.3	Initial magnetic pole detection - Limit switch error	DB	—	—	✔
			27.4	Initial magnetic pole detection - Estimated error	DB	—	—	✔
			27.5	Initial magnetic pole detection - Position deviation error	DB	—	—	✔
			27.6	Initial magnetic pole detection - Speed deviation error	DB	—	—	✔
			27.7	Initial magnetic pole detection - Current error	DB	—	—	✔
	28	Linear encoder error 2	28.1	Linear encoder - Environment error	EDB	—	—	✔
	2A	Linear encoder error 1	2A.1	Linear encoder error 1-1	EDB	—	—	✔
			2A.2	Linear encoder error 1-2	EDB	—	—	✔
			2A.3	Linear encoder error 1-3	EDB	—	—	✔
			2A.4	Linear encoder error 1-4	EDB	—	—	✔
			2A.5	Linear encoder error 1-5	EDB	—	—	✔
			2A.6	Linear encoder error 1-6	EDB	—	—	✔
			2A.7	Linear encoder error 1-7	EDB	—	—	✔
			2A.8	Linear encoder error 1-8	EDB	—	—	✔
	2B	Encoder counter error	2B.1	Encoder counter error 1	EDB	—	—	✔
			2B.2	Encoder counter error 2	EDB	—	—	✔
	30	Regenerative error	30.1	Regeneration heat error	DB	✔①	✔①	✔①
			30.2	Regeneration signal error	DB	✔①	✔①	✔①
			30.3	Regeneration feedback signal error	DB	✔①	✔①	✔①
	31	Overspeed	31.1	Abnormal motor speed	SD	✔	✔	✔
	32	Overcurrent	32.1	Overcurrent detected at hardware detection circuit (during operation)	DB	—	—	✔
			32.2	Overcurrent detected at software detection function (during operation)	DB	✔	✔	✔
			32.3	Overcurrent detected at hardware detection circuit (during a stop)	DB	—	—	✔
			32.4	Overcurrent detected at software detection function (during a stop)	DB	✔	✔	✔
	33	Overvoltage	33.1	Main circuit voltage error	EDB	✔	✔	✔
	35	Command frequency error	35.1	Command frequency error	SD	✔	✔	✔
	37	Parameter error	37.1	Parameter setting range error	DB	—	✔	✔
			37.2	Parameter combination error	DB	—	✔	✔
	3A	Inrush current suppression circuit error	3A.1	Inrush current suppression circuit error	EDB	—	—	✔

Tab. 8-11: *Alarm list of MR-J4-TM (3)*

	No.	Name	Detail number	Detail name	Stop method ②, ③	Alarm deactivation		
						Alarm reset	Communication reset	Power off to on
Alarm	42	Servo control error (for linear servo motor and direct drive motor)	42.1	Servo control error by position deviation	EDB	✔④	✔④	✔
			42.2	Servo control error by speed deviation	EDB	✔④	✔④	✔
			42.3	Servo control error by torque/thrust deviation	EDB	✔④	✔④	✔
		Fully closed loop control error (for fully closed loop control)	42.8	Fully closed loop control error by position deviation	EDB	✔④	✔④	✔
			42.9	Fully closed loop control error by position deviation	EDB	✔④	✔④	✔
			42.A	Fully closed loop control error by position deviation during command stop	EDB	✔④	✔④	✔
	45	Main circuit device overheat	45.1	Main circuit device overheat error 1	SD	✔①	✔①	✔①
			45.2	Main circuit device overheat error 2	SD	✔①	✔①	✔①
	46	Servo motor overheat	46.1	Abnormal temperature of servo motor 1	SD	✔①	✔①	✔①
			46.2	Abnormal temperature of servo motor 2	SD	✔①	✔①	✔①
			46.3	Thermistor disconnected error	SD	✔①	✔①	✔①
			46.4	Thermistor circuit error	SD	✔①	✔①	✔①
			46.5	Abnormal temperature of servo motor 3	DB	✔①	✔①	✔①
			46.6	Abnormal temperature of servo motor 4	DB	✔①	✔①	✔①
	47	Cooling fan error	47.1	Cooling fan stop error	SD	—	—	✔
			47.2	Cooling fan speed reduction error	SD	—	—	✔
	50	Overload 1	50.1	Thermal overload error 1 during operation	SD	✔①	✔①	✔①
			50.2	Thermal overload error 2 during operation	SD	✔①	✔①	✔①
			50.3	Thermal overload error 4 during operation	SD	✔①	✔①	✔①
			50.4	Thermal overload error 1 during a stop	SD	✔①	✔①	✔①
			50.5	Thermal overload error 2 during a stop	SD	✔①	✔①	✔①
			50.6	Thermal overload error 4 during a stop	SD	✔①	✔①	✔①
	51	Overload 2	51.1	Thermal overload error 3 during operation	DB	✔①	✔①	✔①
			51.2	Thermal overload error 3 during a stop	DB	✔①	✔①	✔①
	52	Error excessive	52.1	Excess droop pulse 1	SD	✔	✔	✔
			52.3	Excess droop pulse 2	SD	✔	✔	✔
			52.4	Error excessive during 0 torque limit	SD	✔	✔	✔
			52.5	Excess droop pulse 3	EDB	✔	✔	✔
	54	Oscillation detection	54.1	Oscillation detection error	EDB	✔	✔	✔
	56	Forced stop error	56.2	Over speed during forced stop	EDB	✔	✔	✔
			56.3	Estimated distance over during forced stop	EDB	✔	✔	✔
	63	STO timing error	63.1	STO1 off	DB	✔	✔	✔
			63.2	STO2 off	DB	✔	✔	✔
	68	STO diagnosis error	68.1	Mismatched STO signal error	DB	—	—	✔

Tab. 8-11: *Alarm list of MR-J4-TM (4)*

	No.	Name	Detail number	Detail name	Stop method ②, ③	Alarm deactivation		
						Alarm reset	Communication reset	Power off to on
Alarm	69	Command error	69.1	Forward rotation-side software limit detection - Command excess error	SD	✔	✔	✔
			69.2	Reverse rotation-side software limit detection - Command excess error	SD	✔	✔	✔
			69.3	Forward rotation stroke end detection - Command excess error	SD	✔	✔	✔
			69.4	Reverse rotation stroke end detection - Command excess error	SD	✔	✔	✔
	70	Load-side encoder initial communication error 1	70.1	Load-side encoder initial communication - Receive data error 1	DB	—	—	✔
			70.2	Load-side encoder initial communication - Receive data error 2	DB	—	—	✔
			70.3	Load-side encoder initial communication - Receive data error 3	DB	—	—	✔
			70.5	Load-side encoder initial communication - Transmission data error 1	DB	—	—	✔
			70.6	Load-side encoder initial communication - Transmission data error 2	DB	—	—	✔
			70.7	Load-side encoder initial communication - Transmission data error 3	DB	—	—	✔
			70.A	Load-side encoder initial communication - Process error 1	DB	—	—	✔
			70.B	Load-side encoder initial communication - Process error 2	DB	—	—	✔
			70.C	Load-side encoder initial communication - Process error 3	DB	—	—	✔
			70.D	Load-side encoder initial communication - Process error 4	DB	—	—	✔
			70.E	Load-side encoder initial communication - Process error 5	DB	—	—	✔
			70.F	Load-side encoder initial communication - Process error 6	DB	—	—	✔
	71	Load-side encoder normal communication error 1	71.1	Load-side encoder normal communication - Receive data error 1	EDB	—	—	✔
			71.2	Load-side encoder normal communication - Receive data error 2	EDB	—	—	✔
			71.3	Load-side encoder normal communication - Receive data error 3	EDB	—	—	✔
			71.5	Load-side encoder normal communication - Transmission data error 1	EDB	—	—	✔
			71.6	Load-side encoder normal communication - Transmission data error 2	EDB	—	—	✔
			71.7	Load-side encoder normal communication - Transmission data error 3	EDB	—	—	✔
			71.9	Load-side encoder normal communication - Receive data error 4	EDB	—	—	✔
			71.A	Load-side encoder normal communication - Receive data error 5	EDB	—	—	✔

Tab. 8-11: *Alarm list of MR-J4-TM (5)*

	No.	Name	Detail number	Detail name	Stop method ②, ③	Alarm deactivation		
						Alarm reset	Communication reset	Power off to on
Alarm	72	Load-side encoder normal communication error 2	72.1	Load-side encoder data error 1	EDB	—	—	✔
			72.2	Load-side encoder data update error	EDB	—	—	✔
			72.3	Load-side encoder data waveform error	EDB	—	—	✔
			72.4	Load-side encoder non-signal error	EDB	—	—	✔
			72.5	Load-side encoder hardware error 1	EDB	—	—	✔
			72.6	Load-side encoder hardware error 2	EDB	—	—	✔
			72.9	Load-side encoder data error 2	EDB	—	—	✔
	84	Network module initialization error	84.1	Network module undetected error	DB	—	—	✔
			84.2	Network module initialization error 1	DB	—	—	✔
			84.3	Network module initialization error 2	DB	—	—	✔
	85	Network module error	85.1	Network module error 1	SD	—	—	✔
			85.2	Network module error 2	SD	—	—	✔
			85.3	Network module error 3	SD	—	—	✔
	86	Network communication error	86.1	Network communication error 1	SD	✔	—	✔
			86.2	Network communication error 2	SD	✔	—	✔
			86.3	Network communication error 3	SD	✔	—	✔
	8A	USB communication time-out error	8A.1	USB communication time-out error	SD	✔	✔	✔
	8E	USB communication error	8E.1	USB communication receive error	SD	✔	✔	✔
			8E.2	USB communication checksum error	SD	✔	✔	✔
			8E.3	USB communication character error	SD	✔	✔	✔
			8E.4	USB communication command error	SD	✔	✔	✔
			8E.5	USB communication data number error	SD	✔	✔	✔
	888	Watchdog	88._	Watchdog	DB	—	—	✔

Tab. 8-11: *Alarm list of MR-J4-TM (6)*

① Leave for about 30 minutes of cooling time after removing the cause of occurrence.

② The following shows three stop methods of DB, EDB, and SD.
DB: Stops with dynamic brake. (Coasts for the servo amplifier without dynamic brake.)
EDB: Electronic dynamic brake stop (available with specified servo motors)
Refer to the following table for the specified servo motors.
The stop method for other than the specified servo motors will be DB.

Series	Servo Motor
HG-KR	HG-KR053, HG-KR13, HG-KR23, HG-KR43
HG-MR	HG-MR053, HG-MR13, HG-MR23, HG-MR43
HG-SR	HG-SR51, HG-SR52

SD: Forced stop deceleration

③ This is applicable when parameter PA04 is set to the initial value. The stop system of SD can be changed to DB using parameter PA04.

④ The alarm can be cancelled by setting as follows:
– For the fully closed loop control: set parameter PE03 to "1□□□".
– When a linear servo motor or a direct drive motor is used: set parameter PL04 to "1□□□".

	No.	Name	Detail number	Detail name	Stop method ②, ③
Warning	90	Home position return incomplete warning	90.1	Home position return incomplete	—
			90.2	Home position return abnormal termination	—
			90.5	Z-phase unpassed	—
	91	Servo amplifier overheat warning ①	91.1	Main circuit device overheat warning	—
	92	Battery cable disconnection warning	92.1	Encoder battery cable disconnection warning	—
			92.3	Battery degradation	—
	95	STO warning	95.1	STO1 off detection	DB
			95.2	STO2 off detection	DB
	96	Home position setting warning	96.1	In-position warning at home positioning	—
			96.2	Command input warning at home positioning	—
			96.4	Home positioning warning during magnetic pole detection	—
	98	Software limit warning	98.1	Forward rotation-side software stroke limit reached	—
			98.2	Reverse rotation-side software stroke limit reached	—
	99	Stroke limit warning	99.1	Forward rotation stroke end off	—
			99.2	Reverse rotation stroke end off	—
	9B	Error excessive warning	9B.1	Excess droop pulse 1 warning	—
			9B.3	Excess droop pulse 2 warning	—
			9B.4	Error excessive warning during 0 torque limit	—
	9F	Battery warning	9F.1	Low battery	—
			9F.2	Battery degradation warning	—
	E0	Excessive regeneration warning ①	E0.1	Excessive regeneration warning	—
	E1	Overload warning 1 ①	E1.1	Thermal overload warning 1 during operation	—
			E1.2	Thermal overload warning 2 during operation	—
			E1.3	Thermal overload warning 3 during operation	—
			E1.4	Thermal overload warning 4 during operation	—
			E1.5	Thermal overload error 1 during a stop	—
			E1.6	Thermal overload error 2 during a stop	—
			E1.7	Thermal overload error 3 during a stop	—
			E1.8	Thermal overload error 4 during a stop	—
	E2	Servo motor overheat warning ①	E2.1	Servo motor temperature warning	—
	E3	Absolute position counter warning	E3.1	Multi-revolution counter travel distance excess warning	—
			E3.2	Absolute position counter warning	—
			E3.4	Absolute positioning counter EEPROM writing frequency warning	—
			E3.5	Encoder absolute positioning counter warning	—
	E4	Parameter warning	E4.1	Parameter setting range error warning	—
	E6	Servo forced stop warning	E6.1	Forced stop warning	SD
	E8	Cooling fan speed reduction warning	E8.1	Decreased cooling fan speed warning	—
			E8.2	Cooling fan stop	—
	E9	Main circuit off warning	E9.1	Servo-on signal on during main circuit off	DB
			E9.2	Bus voltage drop during low speed operation	DB
			E9.3	Ready-on signal on during main circuit off	DB
	EC	Overload warning 2 ①	EC.1	Overload warning 2	—
	ED	Output watt excess warning	ED.1	Output watt excess warning	—

Tab. 8-12: *Warning list of MR-J4-TM (1)*

	No.	Name	Detail number	Detail name	Stop method ②, ③
Warning	F0	Tough drive warning	F0.1	Instantaneous power failure tough drive warning	—
			F0.3	Vibration tough drive warning	—
	F2	Drive recorder - Miswriting warning	F2.1	Drive recorder - Area writing time-out warning	—
			F2.2	Drive recorder - Data miswriting warning	—
	F3	Oscillation detection warning	F3.1	Oscillation detection warning	—
	F4	Positioning warning	F4.4	Target position setting range error warning	—
			F4.6	Acceleration time constant setting range error warning	—
			F4.7	Deceleration time constant setting range error warning	—
			F4.8	Control command input error warning	—

Tab. 8-12: *Warning list of MR-J4-TM (2)*

① Leave for about 30 minutes of cooling time after removing the cause of occurrence.

② The following shows two stop methods of DB and SD.
DB: Stops with dynamic brake. (Coasts for the servo amplifier without dynamic brake.)
SD: Forced stop deceleration

③ This is applicable when parameter PA04 is set to the initial value. The stop system of SD can be changed to DB using parameter PA04.

8.5 Remedies for alarms

WARNING:

- ***When any alarm has occurred, eliminate its cause, ensure safety, and deactivate the alarm before restarting operation. Otherwise, it may cause injury.***
- ***If AL. 25 (Absolute position erased) occurs, always make home position setting again. Otherwise, it may cause an unexpected operation.***
- ***As soon as an alarm occurs, make the Servo-off status and interrupt the main circuit power.***

NOTES

When any of the following alarms has occurred, do not cycle the power repeatedly to restart. Doing so will cause a malfunction of the servo amplifier and the servo motor. Remove its cause and allow about 30 minutes for cooling before resuming the operation.

- AL. 30 (Regenerative error)
- AL. 45 (Main circuit device overheat
- AL. 46 (Servo motor overheat)
- AL. 50 (Overload 1)
- AL. 51 (Overload 2)

AL. 37 (Parameter error) is not recorded in the alarm history.

Refer to the section "Remedies for alarms" in the "MELSERVO-J4 Servo Amplifier Instruction Manual (Troubleshooting)" and the "MELSERVO-J4 Servo Amplifier Instruction Manual" for the particular model to remove the cause of the alarm. Use MR Configurator2 to refer to a factor of alarm occurrence.

8.6 Remedies for warnings

WARNING:

If AL. E3 (Absolute position counter warning) occurs, always make home position setting again. Otherwise, it may cause an unexpected operation.

NOTES

When any of the following warnings has occurred, do not cycle the power of the servo amplifier repeatedly to restart. Doing so will cause a malfunction of the servo amplifier and the servo motor. If the power of the servo amplifier is switched off/on during the alarms, allow more than 30 minutes for cooling before resuming operation.

- AL. 91 (Servo amplifier overheat warning)
- AL. E0 (Excessive regeneration warning)
- AL. E1 (Overload warning 1)
- AL. E2 (Servo motor overheat warning)
- AL. EC (Overload warning 2)

Warnings (except AL. F0 (Tough drive warning)) are not recorded in the alarm history.

If AL. E6, AL. E7, AL. E9, AL. EA, or AL. EB (AL. E6 or AL. E9 only for MR-J4-TM) occurs, the servo-off status is established. If any other warning occurs, operation can be continued but an alarm may take place or proper operation may not be performed.

Refer to the section "Remedies for warnings" in the "MELSERVO-J4 Servo Amplifier Instruction Manual (Troubleshooting)" and the "MELSERVO-J4 Servo Amplifier Instruction Manual" for the particular model to remove the cause of the warning. Use MR Configurator2 to refer to a factor of warning occurrence.

8.7 Trouble which does not trigger alarm/warning

For possible causes which do not trigger alarm or warning refer to “MELSERVO J4 Servo Amplifier Instruction Manual (Troubleshooting)”.

Remove each cause referring to the respective sections of the manuals.

A Appendix

A.1 Additional information about the series MR-J4-A

A.1.1 Status Display

Status display	Symbol	Unit	Description
Cumulative feedback pulses	C	pulse	Feedback pulses from the servo motor encoder are counted and displayed. The values in excess of ±99999 can be counted. However, the counter shows only the lower five digits of the actual value since the servo amplifier display is five digits. Press the "SET" button to reset the display value to zero. The value of minus is indicated by the lit decimal points in the upper four digits.
Servo motor speed/ Linear servo motor speed	r	1/min mm/s	The servo motor speed or Linear servo motor speed is displayed. It is displayed rounding off 0.1 1/min (0.1 mm/s) unit.
Droop pulses	E	pulse	The number of droop pulses in the deviation counter are displayed. The decimal points in the upper four digits are lit for reverse rotation pulses. The values in excess of ±99999 can be counted. However, the counter shows only the lower five digits of the actual value since the servo amplifier display is five digits. The number of pulses displayed is in the encoder pulse unit.
Cumulative command pulses	P	pulse	Position command input pulses are counted and displayed. As the value displayed is not yet multiplied by the electronic gear (CMX/CDV), it may not match the indication of the cumulative feedback pulses. The values in excess of ±99999 can be counted. However, the counter shows only the lower five digits of the actual value since the servo amplifier display is five digits. Press the "SET" button to reset the display value to zero. When the servo motor is rotating in the reverse direction, the decimal points in the upper four digits are lit.
Command pulse frequency	n	kpulse/s	The frequency of position command input pulses is counted and displayed. The value displayed is not multiplied by the electronic gear (CMX/CDV).
Analog speed command voltage Analog speed limit voltage	F	V	1) Torque control mode Input voltage of VLA (Analog speed limit) voltage is displayed.
			2) Speed control mode Input voltage of VC (Analog speed command) voltage is displayed
Analog torque command voltage Analog torque limit voltage	U	V	1) Position control mode and speed control mode Voltage of TLA (Analog torque limit) voltage is displayed.
			2) Torque control mode Voltage of TC (Analog torque command) voltage is displayed.
Regenerative load ratio	L	%	The ratio of regenerative power to permissible regenerative power is displayed in %.
Effective load ratio	J	%	The continuous effective load current is displayed. The effective value in the past 15 s is displayed relative to the rated current of 100 %.
Peak load ratio	b	%	The maximum occurrence torque is displayed. The highest value in the past 15 s is displayed relative to the rated current of 100 %.
Instantaneous torque	T	%	The instantaneous occurrence torque is displayed. The value of torque being occurred is displayed in real time considering a rated torque as 100 %.
Within one-revolution position (1 pulse unit)	Cy1	pulse	Position within one revolution is displayed in encoder pulses. The values in excess of ±99999 can be counted. However, the counter shows only the lower five digits of the actual value since the servo amplifier display is five digits. When the servo motor rotates in the CCW direction, the value is added.
Within one-revolution position (1000 pulse unit)	Cy2	1000 pulses	The within one-revolution position is displayed in 1000 pulse increments of the encoder. When the servo motor rotates in the CCW direction, the value is added.
ABS counter	LS	rev	The travel distance from the home position is displayed as multi-revolution counter value of the absolution position encoder in the absolution position detection system.
Load to motor inertia ratio	dC	Multiplier	The estimated ratio of the load inertia moment to the servo motor shaft inertia moment is displayed.

Tab. A-1: *Status display list of MR-J4-A (1)*

Status display	Symbol	Unit	Description
Bus voltage	Pn	V	The voltage of main circuit converter (between P+ and N–) is displayed.
Internal temperature of encoder	ETh	°C	Inside temperature of encoder detected by the encoder is displayed.
Settling time	ST	ms	Settling time is displayed. When it exceeds 1000 ms, "1000" will be displayed.
Oscillation detection frequency	oF	Hz	Frequency at the time of oscillation detection is displayed.
Number of tough drive operations	Td	times	The number of tough drive functions activated is displayed.
Unit power consumption 1 (increment of 1 W)	PC1	W	Unit power consumption is displayed by increment of 1 W. Positive value indicate power running, and negative value indicate regeneration. The values in excess of ±99999 can be counted. However, the counter shows only the lower five digits of the actual value since the servo amplifier display is five digits.
Unit power consumption 2 (increment of 1 kW)	PC2	kW	Unit power consumption is displayed by increment of 1 kW. Positive value indicate power running, and negative value indicate regeneration.
Unit total power consumption 1 (increment of 1 Wh)	TPC1	Wh	Unit total power consumption is displayed by increment of 1 Wh. Positive value is cumulated during power running and negative value during regeneration. The values in excess of ±99999 can be counted. However, the counter shows only the lower five digits of the actual value since the servo amplifier display is five digits.
Unit total power consumption 2 (increment of 100 kWh)	TPC2	100 kWh	Unit total power consumption is displayed by increment of 100 kWh. Positive value is cumulated during power running and negative value during regeneration.
Load-side encoder Cumulative feedback pulses	FC	pulse	Feedback pulses from the load-side encoder are counted and displayed. The values in excess of ±99999 can be counted. However, the counter shows only the lower five digits of the actual value since the servo amplifier display is five digits. Press the "SET" button to reset the display value to zero. The value of minus is indicated by the lit decimal points in the upper four digits.
Load-side encoder Droop pulses	FE	pulse	Droop pulses of the deviation counter between a load-side encoder and a command are displayed. When the count exceeds ±99999, it starts from 0. Negative value is indicated by the lit decimal points in the upper four digits. The display shows the average droop pulses of 128-time sampling at the rate of 444 [µs].
Load-side encoder information 1 (1 pulse unit)	FCy1	pulse	The Z-phase counter of a load-side encoder is displayed in the encoder pulse unit. For an incremental linear encoder, the Z-phase counter is displayed. The value is counted up from 0 based on the home position (reference mark). For an absolute position linear encoder, the encoder absolute position is displayed. When the count exceeds 99999, it starts from 0.
Load-side encoder information 1 (100000 pulses unit)	FCy2	100000 pulses	The Z-phase counter of a load-side encoder is displayed by increments of 100000 pulses. For an incremental linear encoder, the Z-phase counter is displayed. The value is counted up from 0 based on the home position (reference mark). For an absolute position linear encoder, the encoder absolute position is displayed. When the count exceeds 99999, it starts from 0.
Load-side encoder information 2	FL5	rev	When an incremental linear encoder is used as the load-side encoder, the display shows 0. When an absolute position linear encoder is used as the load-side encoder, the display shows 0. When a rotary encoder is used as the load-side encoder, the display shows the value of the multi-revolution counter.
Z-phase counter low	FCy1	pulse	The Z-phase counter is displayed in the encoder pulse unit. For an incremental linear encoder, the Z-phase counter is displayed. The value is counted up from 0 based on the home position (reference mark). For an absolute position linear encoder, the encoder absolute position is displayed. When the count exceeds 99999, it starts from 0.
Z-phase counter high	FCy2	100000 pulses	The Z-phase counter is displayed by increments of 100000 pulses. For an incremental linear encoder, the Z-phase counter is displayed. The value is counted up from 0 based on the home position (reference mark). For an absolute position linear encoder, the encoder absolute position is displayed. When the count exceeds 99999, it starts from 0.
Electrical angle low	ECy1	pulse	The servo motor electrical angle is displayed.
Electrical angle high	ECy2	100000 pulses	The servo motor electrical angle is displayed by increments of 100000 pulses.

Tab. A-1: *Status display list of MR-J4-A (2)*

The status display item of the servo amplifier display shown at power-on can be changed by changing parameter PC36 settings.

A.1.2 Basic setting parameters (PA□□)

No.	Symbol	Name	Initial value	Unit	Operation mode				Control mode		
					Standard	Full.	Lin.	DD	P	S	T
PA01	*STY	Operation mode	1000H	—	✔	✔	✔	✔	✔	✔	✔
PA02	*REG	Regenerative option	0000H	—	✔	✔	✔	✔	✔	✔	✔
PA03	*ABS	Absolute position detection system	0000H	—	✔	✔	✔	✔	✔	—	—
PA04	*AOP1	Function selection A-1	2000H	—	✔	✔	✔	✔	✔	✔	—
PA05	*FBP	Number of command input pulses per revolution	10000	—	✔	✔	✔	✔	✔	—	—
PA06	CMX	Electronic gear numerator (command pulse multiplication numerator)	1	—	✔	✔	✔	✔	✔	—	—
PA07	CDV	Electronic gear denominator (command pulse multiplication denominator)	1	—	✔	✔	✔	✔	✔	—	—
PA08	ATU	Auto tuning mode	0001H	—	✔	✔	✔	✔	✔	✔	—
PA09	RSP	Auto tuning response	16	—	✔	✔	✔	✔	✔	✔	—
PA10	INP	In-position range	100	pulse	✔	✔	✔	✔	✔	—	—
PA11	TLP	Forward rotation torque limit/positive direction thrust limit	100.0	%	✔	✔	✔	✔	✔	✔	✔
PA12	TLN	Reverse rotation torque limit/negative direction thrust limit	100.0	%	✔	✔	✔	✔	✔	✔	✔
PA13	*PLSS	Command pulse input form	0100H	—	✔	✔	✔	✔	✔	—	—
PA14	*POL	Rotation direction selection/travel direction selection	0	—	✔	✔	✔	✔	✔	—	—
PA15	*ENR	Encoder output pulses	4000	pulse/rev	✔	✔	✔	✔	✔	✔	✔
PA16	*ENR2	Encoder output pulses 2	1	—	✔	✔	✔	✔	✔	✔	✔
PA17	*MSR	Servo motor series setting	0000H	—	—	—	✔	—	✔	✔	✔
PA18	*MTY	Servo motor type setting	0000H	—	—	—	✔	—	✔	✔	✔
PA19	*BLK	Parameter writing inhibit	00AAH	—	✔	✔	✔	✔	✔	✔	✔
PA20	*TDS	Tough drive setting	0000H	—	✔	✔	✔	✔	✔	✔	✔
PA21	*AOP3	Function selection A-3	0001H	—	✔	✔	✔	✔	✔	✔	—
PA22	*PCS	Position control composition selection	0000H	—	✔	✔	✔	✔	✔	—	—
PA23	DRAT	Drive recorder arbitrary alarm trigger setting	0000H	—	✔	✔	✔	✔	✔	✔	✔
PA24	AOP4	Function selection A-4	0000H	—	✔	✔	✔	✔	✔	✔	—
PA25	OTHOV	One-touch tuning – Overshoot permissible level	0	%	✔	✔	✔	✔	✔	✔	—
PA26	*AOP5	Function selection A-5	0000H	—	✔	✔	✔	✔	✔	✔	—
PA27	—	For manufacturer setting	0000H	—	—	—	—	—	—	—	—
PA28	—		0000H	—	—	—	—	—	—	—	—
PA29	—		0000H	—	—	—	—	—	—	—	—
PA30	—		0000H	—	—	—	—	—	—	—	—
PA31	—		0000H	—	—	—	—	—	—	—	—
PA32	—		0000H	—	—	—	—	—	—	—	—

Tab. A-2: *List of basic setting parameters for MR-J4-A*

A.1.3 Gain/filter setting parameters (PB□□)

No.	Symbol	Name	Initial value	Unit	Operation mode				Control mode		
					Standard	Full.	Lin.	DD	P	S	T
PB01	FILT	Adaptive tuning mode (adaptive filter II)	0000H	—	✔	✔	✔	✔	✔	✔	✔
PB02	VRFT	Vibration suppression control tuning mode (advanced vibration suppression control II)	0000H	—	✔	✔	✔	✔	✔	—	—
PB03	PST	Position command acceleration/deceleration time constant (position smoothing)	0	ms	✔	✔	✔	✔	✔	—	—
PB04	FFC	Feed forward gain	0	%	✔	✔	✔	✔	✔	—	—
PB05	—	For manufacturer setting	500	—	—	—	—	—	—	—	—
PB06	GD2	Load to motor inertia ratio/load to motor mass ratio	7.00	Multiplier	✔	✔	✔	✔	✔	✔	—
PB07	PG1	Model loop gain	15.0	rad/s	✔	✔	✔	✔	✔	✔	—
PB08	PG2	Position loop gain	37.0	rad/s	✔	✔	✔	✔	✔	—	—
PB09	VG2	Speed loop gain	823	rad/s	✔	✔	✔	✔	✔	✔	—
PB10	VIC	Speed integral compensation	33.7	ms	✔	✔	✔	✔	✔	✔	—
PB11	VDC	Speed differential compensation	980	—	✔	✔	✔	✔	✔	✔	—
PB12	OVA	Overshoot amount compensation	0	%	✔	✔	✔	✔	✔	—	—
PB13	NH1	Machine resonance suppression filter 1	4500	Hz	✔	✔	✔	✔	✔	✔	✔
PB14	NHQ1	Notch shape selection 1	0000H	—	✔	✔	✔	✔	✔	✔	✔
PB15	NH2	Machine resonance suppression filter 2	0000H	Hz	✔	✔	✔	✔	✔	✔	✔
PB16	NHQ2	Notch shape selection 2	0000H	—	✔	✔	✔	✔	✔	✔	✔
PB17	NHF	Shaft resonance suppression filter	0000H	—	✔	✔	✔	✔	✔	✔	✔
PB18	LPF	Low-pass filter setting	3141	rad/s	✔	✔	✔	✔	✔	✔	—
PB19	VRF11	Vibration suppression control 1 - Vibration frequency	100.0	Hz	✔	✔	✔	✔	✔	—	—
PB20	VRF12	Vibration suppression control 1 - Resonance frequency	100.0	Hz	✔	✔	✔	✔	✔	—	—
PB21	VRF13	Vibration suppression control 1 - Vibration frequency damping	0.00	—	✔	✔	✔	✔	✔	—	—
PB22	VRF14	Vibration suppression control 1 - Resonance frequency damping	0.00	—	✔	✔	✔	✔	✔	—	—
PB23	VFBF	Low-pass filter selection	0000H	—	✔	✔	✔	✔	✔	✔	✔
PB24	*MVS	Slight vibration suppression control	0000H	—	✔	✔	✔	✔	✔	—	—
PB25	*BOP1	Function selection B-1	0000H	—	✔	✔	✔	✔	✔	—	—
PB26	*CDP	Gain switching function	0000H	—	✔	✔	✔	✔	✔	✔	—
PB27	CDL	Gain switching condition	10	kpulse/s pulse 1/min	✔	✔	✔	✔	✔	✔	—
PB28	CDT	Gain switching time constant	1	ms	✔	✔	✔	✔	✔	✔	—
PB29	GD2B	Load to motor inertia ratio/load to motor mass ratio after gain switching	7.00	Multiplier	✔	✔	✔	✔	✔	✔	—
PB30	PG2B	Position loop gain after gain switching	0.0	rad/s	✔	✔	✔	✔	✔	—	—
PB31	VG2B	Speed loop gain after gain switching	0	rad/s	✔	✔	✔	✔	✔	✔	—
PB32	VICB	Speed integral compensation after gain switching	0.0	ms	✔	✔	✔	✔	✔	✔	—
PB33	VRF1B	Vibration suppression control 1 - Vibration frequency after gain switching	0.0	Hz	✔	✔	✔	✔	✔	—	—
PB34	VRF2B	Vibration suppression control 1 - Resonance frequency after gain switching	0.0	Hz	✔	✔	✔	✔	✔	—	—
PB35	VRF3B	Vibration suppression control 1 - Vibration frequency damping after gain switching	0.00	—	✔	✔	✔	✔	✔	—	—
PB36	VRF4B	Vibration suppression control 1 - Resonance frequency damping after gain switching	0.00	—	✔	✔	✔	✔	✔	—	—

Tab. A-3: *List of gain/filter setting parameters for MR-J4-A (1)*

No.	Symbol	Name	Initial value	Unit	Operation mode				Control mode		
					Standard	Full.	Lin.	DD	P	S	T
PB37	—	For manufacturer setting	1600	—	—	—	—	—	—	—	—
PB38	—		0.00	—	—	—	—	—	—	—	—
PB39	—		0.00	—	—	—	—	—	—	—	—
PB40	—		0.00	—	—	—	—	—	—	—	—
PB41	—		0000H	—	—	—	—	—	—	—	—
PB42	—		0000H	—	—	—	—	—	—	—	—
PB43	—		0000H	—	—	—	—	—	—	—	—
PB44	—		0.00	—	—	—	—	—	—	—	—
PB45	CNHF	Command notch filter	0000H	—	✔	✔	✔	✔	✔	—	—
PB46	NH3	Machine resonance suppression filter 3	0000H	Hz	✔	✔	✔	✔	✔	✔	✔
PB47	NHQ3	Notch shape selection 3	0000H	—	✔	✔	✔	✔	✔	✔	✔
PB48	NH4	Machine resonance suppression filter 4	0000H	Hz	✔	✔	✔	✔	✔	✔	✔
PB49	NHQ4	Notch shape selection 4	0000h	—	✔	✔	✔	✔	✔	✔	✔
PB50	NH5	Machine resonance suppression filter 5	4500	Hz	✔	✔	✔	✔	✔	✔	✔
PB51	NHQ5	Notch shape selection 5	0000H	—	✔	✔	✔	✔	✔	✔	✔
PB52	VRF21	Vibration suppression control 2 - Vibration frequency	0000H	Hz	✔	✔	✔	✔	✔	—	—
PB53	VRF22	Vibration suppression control 2 - Resonance frequency	100.0	Hz	✔	✔	✔	✔	✔	—	—
PB54	VRF23	Vibration suppression control 2 - Vibration frequency damping	0.00	—	✔	✔	✔	✔	✔	—	—
PB55	VRF24	Vibration suppression control 2 - Resonance frequency damping	0.00	—	✔	✔	✔	✔	✔	—	—
PB56	VRF21B	Vibration suppression control 2 - Vibration frequency after gain switching	0.0	Hz	✔	✔	✔	✔	✔	—	—
PB57	VRF22B	Vibration suppression control 2 - Resonance frequency after gain switching	0.0	Hz	✔	✔	✔	✔	✔	—	—
PB58	VRF23B	Vibration suppression control 2 - Vibration frequency damping after gain switching	0.00	—	✔	✔	✔	✔	✔	—	—
PB59	VRF24B	Vibration suppression control 2 - Resonance frequency damping after gain switching	0.00	—	✔	✔	✔	✔	✔	—	—
PB60	PG1B	Model loop gain after gain switching	0.0	rad/s	✔	✔	✔	✔	✔	✔	—
PB61	—	For manufacturer setting	0.0	—	—	—	—	—	—	—	—
PB62	—		0000H	—	—	—	—	—	—	—	—
PB63	—		0000H	—	—	—	—	—	—	—	—
PB64	—		0000H	—	—	—	—	—	—	—	—

Tab. A-3: *List of gain/filter setting parameters for MR-J4-A (2)*

A.1.4 Extension setting parameters (PC□□)

No.	Symbol	Name	Initial value	Unit	Operation mode				Control mode		
					Standard	Full.	Lin.	DD	P	S	T
PC01	STA	Acceleration time constant	0	ms	✔	—	✔	✔	—	✔	✔
PC02	STB	Deceleration time constant	0	ms	✔	—	✔	✔	—	✔	✔
PC03	STC	S-pattern acceleration/deceleration time constant	0	ms	✔	—	✔	✔	—	✔	✔
PC04	TQC	Torque command time constant/thrust command time constant	0	ms	✔	—	✔	✔	—	—	✔
PC05	SC1	Internal speed command 1	100	r/min mm/s	✔	—	✔	✔	—	✔	—
		Internal speed limit 1			✔	—	✔	✔	—	—	✔
PC06	SC2	Internal speed command 2	500	r/min mm/s	✔	—	✔	✔	—	✔	—
		Internal speed limit 2			✔	—	✔	✔	—	—	✔
PC07	SC3	Internal speed command 3	1000	r/min mm/s	✔	—	✔	✔	—	✔	—
		Internal speed limit 3			✔	—	✔	✔	—	—	✔
PC08	SC4	Internal speed command 4	200	r/min mm/s	✔	—	✔	✔	—	✔	—
		Internal speed limit 4			✔	—	✔	✔	—	—	✔
PC09	SC5	Internal speed command 5	300	r/min mm/s	✔	—	✔	✔	—	✔	—
		Internal speed limit 5			✔	—	✔	✔	—	—	✔
PC10	SC6	Internal speed command 6	500	r/min mm/s	✔	—	✔	✔	—	✔	—
		Internal speed limit 6			✔	—	✔	✔	—	—	✔
PC11	SC7	Internal speed command 7	800	r/min mm/s	✔	—	✔	✔	—	✔	—
		Internal speed limit 7			✔	—	✔	✔	—	—	✔
PC12	VCM	Analog speed command - Maximum speed	0	r/min mm/s	✔	—	✔	✔	—	✔	—
		Analog speed limit - Maximum speed			✔	—	✔	✔	—	—	✔
PC13	TLC	Analog torque/thrust command maximum output	100.0	%	✔	—	✔	✔	—	—	✔
PC14	MOD1	Analog monitor 1 output	0000H	—	✔	✔	✔	✔	✔	✔	✔
PC15	MOD2	Analog monitor 2 output	0001H	—	✔	✔	✔	✔	✔	✔	✔
PC16	MBR	Electromagnetic brake sequence output	0	ms	✔	✔	✔	✔	✔	✔	✔
PC17	ZSP	Zero speed	50	r/min mm/s	✔	✔	✔	✔	✔	✔	✔
PC18	*BPS	Alarm history clear	0000H	—	✔	✔	✔	✔	✔	✔	✔
PC19	*ENRS	Encoder output pulse selection	0000H	—	✔	✔	✔	✔	✔	✔	✔
PC20	*SNO	Station No. setting	0	station	✔	✔	✔	✔	✔	✔	✔
PC21	*SOP	RS-422 communication function selection	0000H	—	✔	✔	✔	✔	✔	✔	✔
PC22	*COP1	Function selection C-1	0000H	—	✔	✔	✔	✔	✔	✔	✔
PC23	*COP2	Function selection C-2	0000H	—	✔	—	✔	✔	—	✔	✔
PC24	*COP3	Function selection C-3	0000H	—	✔	✔	✔	✔	✔	—	—
PC25	—	For manufacturer setting	0000H	—	—	—	—	—	—	—	—
PC26	—	Function selection C-5	0000H	—	✔	✔	✔	✔	✔	✔	—
PC27	*COP6	Function selection C-6	0000H	—	✔	✔	✔	✔	✔	✔	✔
PC28	*COP7	Function selection C-7	0000H	—	—	—	✔	—	✔	✔	✔
PC29	—	For manufacturer setting	0000H	—	—	—	—	—	—	—	—
PC30	STA2	Acceleration time constant 2	0	ms	✔	—	✔	✔	—	✔	✔
PC31	STB2	Deceleration time constant 2	0	ms	✔	—	✔	✔	—	✔	✔
PC32	CMX2	Command input pulse multiplication numerator 2	1	—	✔	✔	✔	✔	✔	—	—
PC33	CMX3	Command input pulse multiplication numerator 3	1	—	✔	✔	✔	✔	✔	—	—
PC34	CMX4	Command input pulse multiplication numerator 4	1	—	✔	✔	✔	✔	✔	—	—

Tab. A-4: *List of extension setting parameters for MR-J4-A (1)*

No.	Symbol	Name	Initial value	Unit	Operation mode				Control mode		
					Standard	Full.	Lin.	DD	P	S	T
PC35	TL2	Internal torque limit 2/internal thrust limit 2	100.0	%	✔	✔	✔	✔	✔	✔	✔
PC36	*DMD	Status display selection	0000H	—	✔	✔	✔	✔	✔	✔	✔
PC37	VCO	Analog speed command offset	0	mV	✔	—	✔	✔	—	✔	—
		Analog speed limit offset			✔	—	✔	✔	—	—	✔
PC38	TPO	Analog torque command offset	0	mV	✔	—	✔	✔	—	—	✔
		Analog torque limit offset			✔	—	✔	✔	—	✔	—
PC39	MO1	Analog monitor 1 offset	0	mV	✔	✔	✔	✔	✔	✔	✔
PC40	MO2	Analog monitor 2 offset	0	mV	✔	✔	✔	✔	✔	✔	✔
PC41	—	For manufacturer setting	0	—	—	—	—	—	—	—	—
PC42	—		0	—	—	—	—	—	—	—	—
PC43	ERZ	Error excessive alarm detection level	0	rev mm	✔	✔	✔	✔	✔	—	—
PC44	*COP9	Function selection C-9	0000H	—	—	✔	—	—	✔	—	—
PC45	*COPA	Function selection C-A	0000H	—	—	✔	✔	—	✔	✔	✔
PC46	—	For manufacturer setting	0	—	—	—	—	—	—	—	—
PC47	—		0	—	—	—	—	—	—	—	—
PC48	—		0	—	—	—	—	—	—	—	—
PC49	—		0	—	—	—	—	—	—	—	—
PC50	—		0000H	—	—	—	—	—	—	—	—
PC51	RSBR	Forced stop deceleration time constant	100	ms	✔	✔	✔	✔	✔	✔	—
PC52	—	For manufacturer setting	0	—	—	—	—	—	—	—	—
PC53	—		0	—	—	—	—	—	—	—	—
PC54	RSUP1	Vertical axis freefall prevention compensation amount	0	0.0001rev 0.01mm	✔	✔	✔	✔	✔	—	—
PC55	—	For manufacturer setting	0	—	—	—	—	—	—	—	—
PC56	—		100	—	—	—	—	—	—	—	—
PC57	—		0000H	—	—	—	—	—	—	—	—
PC58	—		0	—	—	—	—	—	—	—	—
PC59	—		0000H	—	—	—	—	—	—	—	—
PC60	*COPD	Function selection C-D	0000H	—	✔	—	—	—	✔	✔	✔
PC61	—	For manufacturer setting	0000H	—	—	—	—	—	—	—	—
PC62	—		0000H	—	—	—	—	—	—	—	—
PC63	—		0000H	—	—	—	—	—	—	—	—
PC64	—		0000H	—	—	—	—	—	—	—	—
PC65	—		0000H	—	—	—	—	—	—	—	—
PC66	—		0	—	—	—	—	—	—	—	—
PC67	—		0	—	—	—	—	—	—	—	—
PC68	—		0	—	—	—	—	—	—	—	—
PC69	—		0	—	—	—	—	—	—	—	—
PC70	—		0	—	—	—	—	—	—	—	—
PC71	—		0040H	—	—	—	—	—	—	—	—
PC72	—		0000H	—	—	—	—	—	—	—	—
PC73	ERW	Error excessive warning level	0	rev mm	✔	✔	✔	✔	—	—	—

Tab. A-4: *List of extension setting parameters for MR-J4-A (2)*

No.	Symbol	Name	Initial value	Unit	Operation mode				Control mode		
					Standard	Full.	Lin.	DD	P	S	T
PC74	—	For manufacturer setting	0000H	—	—	—	—	—	—	—	—
PC75	—		0000H	—	—	—	—	—	—	—	—
PC76	—		0000H	—	—	—	—	—	—	—	—
PC77	—		0000H	—	—	—	—	—	—	—	—
PC78	—		0000H	—	—	—	—	—	—	—	—
PC79	—		0000H	—	—	—	—	—	—	—	—
PC80	—		0000H	—	—	—	—	—	—	—	—

Tab. A-4: *List of extension setting parameters for MR-J4-A (3)*

A.1.5 I/O setting parameters (PD□□)

No.	Symbol	Name	Initial value	Unit	Operation mode				Control mode		
					Standard	Full.	Lin.	DD	P	S	T
PD01	*DIA1	Input signal automatic on selection 1	0000H	—	✔	✔	✔	✔	✔	✔	✔
PD02	—	For manufacturer setting	0000H	—	—	—	—	—	—	—	—
PD03	*DI1L	Input device selection 1L	0202H	—	✔	✔	✔	✔	✔	✔	—
PD04	*DI1H	Input device selection 1H	0202H	—	✔	—	✔	✔	—	—	✔
PD05	*DI2L	Input device selection 2L	2100H	—	✔	✔	✔	✔	✔	✔	—
PD06	*DI2H	Input device selection 2H	2021H	—	✔	—	✔	✔	—	—	✔
PD07	*DI3L	Input device selection 3L	0704H	—	✔	✔	✔	✔	✔	✔	—
PD08	*DI3H	Input device selection 3H	0707H	—	✔	—	✔	✔	—	—	✔
PD09	*DI4L	Input device selection 4L	0805H	—	✔	✔	✔	✔	✔	✔	—
PD10	*DI4H	Input device selection 4H	0808H	—	✔	—	✔	✔	—	—	✔
PD11	*DI5L	Input device selection 5L	0303H	—	✔	✔	✔	✔	✔	✔	—
PD12	*DI5H	Input device selection 5H	3803H	—	✔	—	✔	✔	—	—	✔
PD13	*DI6L	Input device selection 6L	2006H	—	✔	✔	✔	✔	✔	✔	—
PD14	*DI6H	Input device selection 6H	3920H	—	✔	—	✔	✔	—	—	✔
PD15	—	For manufacturer setting	0000H	—	—	—	—	—	—	—	—
PD16	—		0000H	—	—	—	—	—	—	—	—
PD17	*DI8L	Input device selection 8L	0A0AH	—	✔	✔	✔	✔	✔	✔	—
PD18	*DI8H	Input device selection 8H	0A00H	—	✔	—	✔	✔	—	—	✔
PD19	*DI9L	Input device selection 9L	0B0BH	—	✔	✔	✔	✔	✔	✔	—
PD20	*DI9H	Input device selection 9H	0B00H	—	✔	—	✔	✔	—	—	✔
PD21	*DI10L	Input device selection 10L	2323H	—	✔	✔	✔	✔	✔	✔	—
PD22	*DI10H	Input device selection 10H	2B23H	—	✔	—	✔	✔	—	—	✔
PD23	*DO1	Output device selection 1	0004H	—	✔	✔	✔	✔	✔	✔	✔
PD24	*DO2	Output device selection 2	000CH	—	✔	✔	✔	✔	✔	✔	✔
PD25	*DO3	Output device selection 3	0004H	—	✔	✔	✔	✔	✔	✔	✔
PD26	*DO4	Output device selection 4	0007H	—	✔	✔	✔	✔	✔	✔	✔
PD27	—	For manufacturer setting	0003H	—	—	—	—	—	—	—	—
PD28	*DO6	Output device selection 6	0002H	—	✔	✔	✔	✔	✔	✔	✔
PD29	*DIF	Input filter setting	0004H	—	✔	✔	✔	✔	✔	✔	✔
PD30	*DOP1	Function selection D-1	0000H	—	✔	✔	✔	✔	✔	✔	✔
PD31	*DOP2	Function selection D-2	0000H	—	✔	✔	✔	✔	✔	—	—
PD32	*DOP3	Function selection D-3	0000H	—	✔	✔	✔	✔	✔	—	—
PD33	*DOP4	Function selection D-4	0000H	—	✔	✔	✔	✔	✔	✔	✔
PD34	DOP5	Function selection D-5	0000H	—	✔	✔	✔	✔	✔	✔	✔
PD35	—	For manufacturer setting	0000H	—	—	—	—	—	—	—	—
PD36	—		0000H	—	—	—	—	—	—	—	—
PD37	—		0000H	—	—	—	—	—	—	—	—
PD38	—		0	—	—	—	—	—	—	—	—
PD39	—		0	—	—	—	—	—	—	—	—
PD40	—		0	—	—	—	—	—	—	—	—
PD41	—		0000H	—	—	—	—	—	—	—	—
PD42	—		0000H	—	—	—	—	—	—	—	—

Tab. A-5: *List of I/O setting parameters for MR-J4-A (1)*

No.	Symbol	Name	Initial value	Unit	Operation mode				Control mode		
					Standard	Full.	Lin.	DD	P	S	T
PD43	*DI11L	Input device selection 11L	0000H	—	✔	✔	✔	✔	✔	✔	—
PD44	*DI11H	Input device selection 11H	3A00H	—	✔	—	✔	✔	—	—	✔
PD45	*DI12L	Input device selection 12L	0000H	—	✔	✔	✔	✔	✔	✔	—
PD46	*DI12H	Input device selection 12H	3B00H	—	✔	—	✔	✔	—	—	✔
PD47	*DO7	Output device selection 7	0000H	—	✔	✔	✔	✔	✔	✔	✔
PD48	—	For manufacturer setting	0000H	—	—	—	—	—	—	—	—

Tab. A-5: *List of I/O setting parameters for MR-J4-A (2)*

A.1.6 Extension setting 2 parameters (PE□□)

No.	Symbol	Name	Initial value	Unit	Operation mode				Control mode		
					Standard	Full.	Lin.	DD	P	S	T
PE01	*FCT1	Fully closed loop function selection 1	0000H	—	—	✔	—	—	✔	—	—
PE02	—	For manufacturer setting	0000H	—	—	—	—	—	—	—	—
PE03	*FCT2	Fully closed loop function selection 2	0003H	—	—	✔	—	—	✔	—	—
PE04	*FBN	Fully closed loop control - Feedback pulse electronic gear 1 - Numerator	1	—	—	✔	—	—	✔	—	—
PE05	*FBD	Fully closed loop control - Feedback pulse electronic gear 1 - Denominator	1	—	—	✔	—	—	✔	—	—
PE06	BC1	Fully closed loop control - Speed deviation error detection level	400	1/min	—	✔	—	—	✔	—	—
PE07	BC2	Fully closed loop control - Position deviation error detection level	100	kpulse	—	✔	—	—	✔	—	—
PE08	DUF	Fully closed loop dual feedback filter	10	rad/s	—	✔	—	—	✔	—	—
PE09	—	For manufacturer setting	0000H	—	—	—	—	—	—	—	—
PE10	FCT3	Fully closed loop function selection 3	0000H	—	—	✔	—	—	✔	—	—
PE11	—	For manufacturer setting	0000H	—	—	—	—	—	—	—	—
PE12	—		0000H	—	—	—	—	—	—	—	—
PE13	—		0000H	—	—	—	—	—	—	—	—
PE14	—		0111H	—	—	—	—	—	—	—	—
PE15	—		20	—	—	—	—	—	—	—	—
PE16	—		0000H	—	—	—	—	—	—	—	—
PE17	—		0000H	—	—	—	—	—	—	—	—
PE18	—		0000H	—	—	—	—	—	—	—	—
PE19	—		0000H	—	—	—	—	—	—	—	—
PE20	—		0000H	—	—	—	—	—	—	—	—
PE21	—		0000H	—	—	—	—	—	—	—	—
PE22	—		0000H	—	—	—	—	—	—	—	—
PE23	—		0000H	—	—	—	—	—	—	—	—
PE24	—		0000H	—	—	—	—	—	—	—	—
PE25	—		0000H	—	—	—	—	—	—	—	—
PE26	—		0000H	—	—	—	—	—	—	—	—
PE27	—		0000H	—	—	—	—	—	—	—	—
PE28	—		0000H	—	—	—	—	—	—	—	—
PE29	—		0000H	—	—	—	—	—	—	—	—
PE30	—		0000H	—	—	—	—	—	—	—	—
PE31	—		0000H	—	—	—	—	—	—	—	—
PE32	—		0000H	—	—	—	—	—	—	—	—
PE33	—		0000H	—	—	—	—	—	—	—	—
PE34	*FBN2	Fully closed loop control - Feedback pulse electronic gear 2 - Numerator	1	—	—	✔	—	—	✔	—	—
PE35	*FBD2	Fully closed loop control - Feedback pulse electronic gear 2 - Denominator	1	—	—	✔	—	—	✔	—	—
PE36	—	For manufacturer setting	0.0	—	—	—	—	—	—	—	—
PE37	—		0.00	—	—	—	—	—	—	—	—
PE38	—		0.00	—	—	—	—	—	—	—	—
PE39	—		20	—	—	—	—	—	—	—	—
PE40	—		0000H	—	—	—	—	—	—	—	—
PE41	EOP3	Function selection E-3	0000H	—	✔	✔	✔	✔	✔	✔	✔

Tab. A-6: *List of extension setting 2 parameters for MR-J4-A (1)*

No.	Symbol	Name	Initial value	Unit	Operation mode				Control mode		
					Standard	Full.	Lin.	DD	P	S	T
PE42	—	For manufacturer setting	0	—	—	—	—	—	—	—	—
PE43	—		0.0	—	—	—	—	—	—	—	—
PE44	LMCP	Lost motion compensation positive-side compensation value selection	0	0.01%	✔	✔	✔	✔	✔	—	—
PE45	LMCN	Lost motion compensation negative-side compensation value selection	0	0.01%	✔	✔	✔	✔	✔	—	—
PE46	LMFLT	Lost motion filter setting	0	0.1 ms	✔	✔	✔	✔	✔	—	—
PE47	TOF	Torque offset	0	0.01%	✔	✔	—	—	✔	✔	✔
PE48	*LMOP	Lost motion compensation function selection	0000H	—	✔	✔	✔	✔	✔	—	—
PE49	LMCD	Lost motion compensation timing	0	0.1 ms	✔	✔	✔	✔	✔	—	—
PE50	LMCT	Lost motion compensation non-sensitive band	0	pulse kpulse	✔	✔	✔	✔	✔	—	—
PE51	—	For manufacturer setting	0000H	—	—	—	—	—	—	—	—
PE52	—		0000H	—	—	—	—	—	—	—	—
PE53	—		0000H	—	—	—	—	—	—	—	—
PE54	—		0000H	—	—	—	—	—	—	—	—
PE55	—		0000H	—	—	—	—	—	—	—	—
PE56	—		0000H	—	—	—	—	—	—	—	—
PE57	—		0000H	—	—	—	—	—	—	—	—
PE58	—		0000H	—	—	—	—	—	—	—	—
PE59	—		0000H	—	—	—	—	—	—	—	—
PE60	—		0000H	—	—	—	—	—	—	—	—
PE61	—		0.00	—	—	—	—	—	—	—	—
PE62	—		0.00	—	—	—	—	—	—	—	—
PE63	—		0.00	—	—	—	—	—	—	—	—
PE64	—		0.00	—	—	—	—	—	—	—	—

Tab. A-6: *List of extension setting 2 parameters for MR-J4-A (2)*

A.1.7 Extension setting 3 parameters (PF□□)

No.	Symbol	Name	Initial value	Unit	Operation mode				Control mode		
					Standard	Full.	Lin.	DD	P	S	T
PF01	—	For manufacturer setting	0000H	—	—	—	—	—	—	—	—
PF02	—		0000H	—	—	—	—	—	—	—	—
PF03	—		0000H	—	—	—	—	—	—	—	—
PF04	—		0	—	—	—	—	—	—	—	—
PF05	—		0	—	—	—	—	—	—	—	—
PF06	—		0000H	—	—	—	—	—	—	—	—
PF07	—		1	—	—	—	—	—	—	—	—
PF08	—		1	—	—	—	—	—	—	—	—
PF09	*FOP5	Function selection F-5	0000H	—	✔	✔	—	—	✔	✔	✔
PF10	—	For manufacturer setting	0000H	—	—	—	—	—	—	—	—
PF11	—		0000H	—	—	—	—	—	—	—	—
PF12	—		10000	—	—	—	—	—	—	—	—
PF13	—		100	—	—	—	—	—	—	—	—
PF14	—		100	—	—	—	—	—	—	—	—
PF15	DBT	Electronic dynamic brake operating time	2000	ms	✔	✔	—	—	✔	✔	✔
PF16	—	For manufacturer setting	0000H	—	—	—	—	—	—	—	—
PF17	—		10	—	—	—	—	—	—	—	—
PF18	*STOD	STO diagnosis error detection time	0	s	✔	✔	✔	✔	✔	✔	✔
PF19	—	For manufacturer setting	0000H	—	—	—	—	—	—	—	—
PF20	—		0000H	—	—	—	—	—	—	—	—
PF21	DRT	Drive recorder switching time setting	0	s	✔	✔	✔	✔	✔	✔	✔
PF22	—	For manufacturer setting	200	—	—	—	—	—	—	—	—
PF23	OSCL1	Vibration tough drive - Oscillation detection level	50	%	✔	✔	✔	✔	✔	✔	—
PF24	*OSCL2	Vibration tough drive function selection	0000H	—	✔	✔	✔	✔	✔	✔	—
PF25	CVAT	SEMI-F47 function - Instantaneous power failure detection time	200	ms	✔	✔	✔	✔	✔	✔	✔
PF26	—	For manufacturer setting	0	—	—	—	—	—	—	—	—
PF27	—		0	—	—	—	—	—	—	—	—
PF28	—		0	—	—	—	—	—	—	—	—
PF29	—		0000H	—	—	—	—	—	—	—	—
PF30	—		0	—	—	—	—	—	—	—	—
PF31	FRIC	Machine diagnosis function - Friction judgement speed	0	1/min mm/s	✔	✔	✔	✔	✔	✔	✔
PF32	—	For manufacturer setting	50	—	—	—	—	—	—	—	—
PF33	—		0000H	—	—	—	—	—	—	—	—
PF34	*SOP3	RS-422 communication function selection 3	0000H	—	✔	✔	✔	✔	✔	✔	✔

Tab. A-7: *List of extension setting 3 parameters for MR-J4-A (1)*

No.	Symbol	Name	Initial value	Unit	Operation mode				Control mode		
					Standard	Full.	Lin.	DD	P	S	T
PF35	—	For manufacturer setting	0000H	—	—	—	—	—	—	—	—
PF36	—		0000H	—	—	—	—	—	—	—	—
PF37	—		0000H	—	—	—	—	—	—	—	—
PF38	—		0000H	—	—	—	—	—	—	—	—
PF39	—		0000H	—	—	—	—	—	—	—	—
PF40	—		0	—	—	—	—	—	—	—	—
PF41	—		0	—	—	—	—	—	—	—	—
PF42	—		0	—	—	—	—	—	—	—	—
PF43	—		0	—	—	—	—	—	—	—	—
PF44	—		0	—	—	—	—	—	—	—	—
PF45	—		0000H	—	—	—	—	—	—	—	—
PF46	—		0000H	—	—	—	—	—	—	—	—
PF47	—		0000H	—	—	—	—	—	—	—	—
PF48	—		0000H	—	—	—	—	—	—	—	—

Tab. A-7: *List of extension setting 3 parameters for MR-J4-A (2)*

A.1.8 Linear servo motor/DD motor setting parameters (PL□□)

No.	Symbol	Name	Initial value	Unit	Operation mode				Control mode		
					Standard	Full.	Lin.	DD	P	S	T
PL01	*LIT1	Linear servo motor/DD motor function selection 1	0301H	—	—	—	✔	✔	✔	✔	✔
PL02	*LIM	Linear encoder resolution - Numerator	1000	µm	—	—	✔	—	✔	✔	✔
PL03	*LID	Linear encoder resolution - Denominator	1000	µm	—	—	✔	—	✔	✔	✔
PL04	*LIT2	Linear servo motor/DD motor function selection 2	0003H	—	—	—	✔	✔	✔	✔	✔
PL05	LB1	Position deviation error detection level	0	mm 0.01 rev	—	—	✔	✔	✔	—	—
PL06	LB2	Speed deviation error detection level	0	1/min mm/s	—	—	✔	✔	✔	✔	—
PL07	LB3	Torque/thrust deviation error detection level	100	%	—	—	✔	✔	✔	✔	✔
PL08	*LIT3	Linear servo motor/DD motor function selection 3	0010H	—	—	—	✔	✔	✔	✔	✔
PL09	LPWM	Magnetic pole detection voltage level	30	%	—	—	✔	✔	✔	✔	✔
PL10	—	For manufacturer setting	5	—	—	—	—	—	—	—	—
PL11	—		100	—	—	—	—	—	—	—	—
PL12	—		500	—	—	—	—	—	—	—	—
PL13	—		0000H	—	—	—	—	—	—	—	—
PL14	—		0000H	—	—	—	—	—	—	—	—
PL15	—		20	—	—	—	—	—	—	—	—
PL16	—		0	—	—	—	—	—	—	—	—
PL17	LTSTS	Magnetic pole detection - Minute position detection method - Function selection	0000H	—	—	—	✔	✔	✔	✔	✔
PL18	IDLV	Magnetic pole detection - Minute position detection method - Identification signal amplitude	0	%	—	—	✔	✔	✔	✔	✔
PL19	—	For manufacturer setting	0	—	—	—	—	—	—	—	—
PL20	—		0	—	—	—	—	—	—	—	—
PL21	—		0	—	—	—	—	—	—	—	—
PL22	—		0	—	—	—	—	—	—	—	—
PL23	—		0000H	—	—	—	—	—	—	—	—
PL24	—		0	—	—	—	—	—	—	—	—
PL25	—		0000H	—	—	—	—	—	—	—	—
PL26	—		0000H	—	—	—	—	—	—	—	—
PL27	—		0000H	—	—	—	—	—	—	—	—
PL28	—		0000H	—	—	—	—	—	—	—	—
PL29	—		0000H	—	—	—	—	—	—	—	—
PL30	—		0000H	—	—	—	—	—	—	—	—
PL31	—		0000H	—	—	—	—	—	—	—	—
PL32	—		0000H	—	—	—	—	—	—	—	—
PL33	—		0000H	—	—	—	—	—	—	—	—
PL34	—		0000H	—	—	—	—	—	—	—	—
PL35	—		0000H	—	—	—	—	—	—	—	—
PL36	—		0000H	—	—	—	—	—	—	—	—
PL37	—		0000H	—	—	—	—	—	—	—	—
PL38	—		0000H	—	—	—	—	—	—	—	—
PL39	—		0000H	—	—	—	—	—	—	—	—
PL40	—		0000H	—	—	—	—	—	—	—	—

Tab. A-8: *List of linear servo motor/DD motor setting parameters for MR-J4-A (1)*

No.	Symbol	Name	Initial value	Unit	Operation mode				Control mode		
					Standard	Full.	Lin.	DD	P	S	T
PL41	—	For manufacturer setting	0000H	—	—	—	—	—	—	—	—
PL42	—		0000H	—	—	—	—	—	—	—	—
PL43	—		0000H	—	—	—	—	—	—	—	—
PL44	—		0000H	—	—	—	—	—	—	—	—
PL45	—		0000H	—	—	—	—	—	—	—	—
PL46	—		0000H	—	—	—	—	—	—	—	—
PL47	—		0000H	—	—	—	—	—	—	—	—
PL48	—		0000H	—	—	—	—	—	—	—	—

Tab. A-8: *List of linear servo motor/DD motor setting parameters for MR-J4-A (2)*

A.1.9 Option setting parameters (Po□□)

No.	Symbol	Name	Initial value	Unit	Operation mode				Control mode		
					Standard	Full.	Lin.	DD	P	S	T
Po01	—	For manufacturer setting	0000H	—	—	—	—	—	—	—	—
Po02	*ODI1	MR-D01 input device selection 1	0302H	—	✔	✔	✔	✔	✔	✔	✔
Po03	*ODI2	MR-D01 input device selection 2	0905H	—	✔	✔	✔	✔	✔	✔	✔
Po04	*ODI3	MR-D01 input device selection 3	2524H	—	✔	✔	✔	✔	✔	✔	✔
Po05	*ODI4	MR-D01 input device selection 4	2026H	—	✔	✔	✔	✔	✔	✔	✔
Po06	*ODI5	MR-D01 input device selection 5	0427H	—	✔	✔	✔	✔	✔	✔	✔
Po07	*ODI6	MR-D01 input device selection 6	0807H	—	✔	✔	✔	✔	✔	✔	✔
Po08	*ODO1	MR-D01 output device selection 1	2726H	—	✔	✔	✔	✔	✔	✔	✔
Po09	*ODO2	MR-D01 output device selection 2	0423H	—	✔	✔	✔	✔	✔	✔	✔
Po10	*OOP1	Function selection O-1	2001H	—	✔	✔	✔	✔	—	—	—
Po11	*OOP2	Function selection O-2	0000H	—	✔	✔	✔	✔	✔	✔	✔
Po12	*OOP3	Function selection O-3	0000H	—	✔	✔	✔	✔	—	—	—
Po13	*OMOD1	MR-D01 analog monitor 1 output selection	0000H	—	✔	✔	✔	✔	✔	✔	✔
Po14	*OMOD2	MR-D01 analog monitor 2 output selection	0000H	—	✔	✔	✔	✔	✔	✔	✔
Po15	OMO1	MR-D01 analog monitor 1 offset	0	mV	✔	✔	✔	✔	✔	✔	✔
Po16	OMO2	MR-D01 analog monitor 2 offset	0	mV	✔	✔	✔	✔	✔	✔	✔
Po17	—	For manufacturer setting	0000H	—	—	—	—	—	—	—	—
Po18	—		0000H	—	—	—	—	—	—	—	—
Po19	—		0000H	—	—	—	—	—	—	—	—
Po20	—		0000H	—	—	—	—	—	—	—	—
Po21	OVCO	MR-D01 override offset	0	mV	✔	✔	✔	✔	✔	✔	✔
Po22	OTLO	MR-D01 override offset	0	mV	✔	✔	✔	✔	✔	✔	✔
Po23	—	For manufacturer setting	0000H	—	—	—	—	—	—	—	—
Po24	—		0000H	—	—	—	—	—	—	—	—
Po25	—		0000H	—	—	—	—	—	—	—	—
Po26	—		0000H	—	—	—	—	—	—	—	—
Po27	*ODI7	MR-D01 input device selection 7	2D2CH	—	—	—	—	—	—	—	—
Po28	*ODI8	MR-D01 input device selection 8	002EH	—	—	—	—	—	—	—	—
Po29	—	For manufacturer setting	0000H	—	—	—	—	—	—	—	—
Po30	—		0000H	—	—	—	—	—	—	—	—
Po31	—		0000H	—	—	—	—	—	—	—	—
Po32	—		0000H	—	—	—	—	—	—	—	—

Tab. A-9: *List of option setting parameters for MR-J4-A*

NOTES

To enable a parameter whose symbol is preceded by *, cycle the power after setting it.

Abbreviations of operation modes indicate the followings.

- Standard: Standard (semi closed loop system) use of the rotary servo motor
- Full.: Fully closed loop system use of the rotary servo motor
- Lin.: Linear servo motor use
- DD: Direct drive (DD) motor use

For MR-J4-03A6(-RJ) servo amplifiers, the operation mode is available only in standard (semi closed loop system).

The symbols in the control mode column mean as follows.

- P: Position control mode
- S: Speed control mode
- T: Torque control mode

For servo amplifier with software version B3 or later, the parameter initial values for the manufacturer setting are partially changed.

Setting an out of range value to each parameter will trigger AL. 37 (Parameter error).

NOTES

The following parameters are not available with MR-J4-03A6 servo amplifiers.

- Pr. PA02 (Regenerative option)
- Pr. PA17 (Servo motor series setting)
- Pr. PA18 (Servo motor type setting)
- Pr. PA26 (Function selection A-5)
- Pr. PC44 (Function selection C-9)
- Pr. PC45 (Function selection C-A)
- Pr. PD47 (Output device selection 7)
- Pr. PE03 (Fully closed loop function selection 2)
- Pr. PE04 (Fully closed loop control - Feedback pulse electronic gear 1 -Numerator)
- Pr. PE05 (Fully closed loop control - Feedback pulse electronic gear 1 -Denominator)
- Pr. PE06 (Fully closed loop control - Speed deviation error detection level)
- Pr. PE07 (Fully closed loop control - Position deviation error detection level)
- Pr. PE08 (Fully closed loop dual feedback filter)
- Pr. PE10 (Fully closed loop function selection 3)
- Pr. PE34 (Fully closed loop control - Feedback pulse electronic gear 2 -Numerator)
- Pr. PE35 (Fully closed loop control - Feedback pulse electronic gear 2 -Denominator)
- Pr. PF25 (SEMI-F47 function - Instantaneous power failure detection time)
- Pr. PF34 (RS-422 communication function selection 3)

Linear servo motor/DD motor setting parameters (Pr. PL□□) cannot be used with MR-J4-03A6 servo amplifiers.

A.2 Additional information about the series MR-J4-A-RJ

A.2.1 Status Display

Status display	Symbol	Unit	Description	Control mode ①			Operation mode ②			
				CP/BCD	CL	PS	Standard	Full.	Lin.	DD
Cumulative feedback pulses	C	pulse	Feedback pulses from the servo motor encoder are counted and displayed. The values in excess of ±99999 can be counted. However, the counter shows only the lower five digits of the actual value since the servo amplifier display is five digits. Press the "SET" button to reset the display value to zero. The value of minus is indicated by the lit decimal points in the upper four digits.	✔	✔	✔	✔	✔	✔	✔
Servo motor speed/ Linear servo motor speed	r	1/min	The servo motor speed or Linear servo motor speed is displayed. It is displayed rounding off 0.1 1/min (0.1 mm/s) unit.	✔	✔	✔	✔	✔	✔	✔
Droop pulses	E	pulse	The number of droop pulses in the deviation counter are displayed. The decimal points in the upper four digits are lit for reverse rotation pulses. The values in excess of ±99999 can be counted. However, the counter shows only the lower five digits of the actual value since the servo amplifier display is five digits. The number of pulses displayed is in the encoder pulse unit.	✔	✔	✔	✔	✔	✔	✔
Cumulative command pulses	P	pulse	Not used with the positioning mode. "0" is always displayed.	—	—	—	—	—	—	—
Command pulse frequency	n	kpulse/s	Not used with the positioning mode. "0" is always displayed.	—	—	—	—	—	—	—
Analog speed command voltage Analog speed limit voltage	F	V	Not used with the positioning mode. An applied voltage to the CN1 connector is displayed.	—	—	—	—	—	—	—
Analog torque command voltage	U	V	Not used with the positioning mode. An applied voltage to the CN1 connector is displayed.	—	—	—	—	—	—	—
Analog torque limit voltage			Voltage of TC (Analog torque command) voltage is displayed.	✔	✔	✔	✔	✔	✔	✔
Regenerative load ratio	L	%	The ratio of regenerative power to permissible regenerative power is displayed in %.	✔	✔	✔	✔	✔	✔	✔
Effective load ratio	J	%	The continuous effective load current is displayed. The effective value in the past 15 s is displayed relative to the rated current of 100 %.	✔	✔	✔	✔	✔	✔	✔
Peak load ratio	b	%	The maximum occurrence torque is displayed. The highest value in the past 15 s is displayed relative to the rated current of 100 %.	✔	✔	✔	✔	✔	✔	✔
Instantaneous torque	T	%	The instantaneous occurrence torque is displayed. The value of torque being occurred is displayed in real time considering a rated torque as 100 %.	✔	✔	✔	✔	✔	✔	✔
Position within one-revolution (1 pulse unit)	Cy1	pulse	Position within one revolution is displayed in encoder pulses. The values in excess of ±99999 can be counted. However, the counter shows only the lower five digits of the actual value since the servo amplifier display is five digits. When the servo motor rotates in the CCW direction, the value is added.	✔	✔	✔	✔	✔	✔	✔

Tab. A-10: *Status display list of MR-J4-A-RJ (1)*

Status display	Symbol	Unit	Description	Control mode ①			Operation mode ②			
				CP/BCD	CL	PS	Standard	Full.	Lin.	DD
Position within one-revolution (1000 pulse unit)	Cy2	1000 pulses	The within one-revolution position is displayed in 1000 pulse increments of the encoder. When the servo motor rotates in the CCW direction, the value is added.	✔	✔	✔	✔	✔	✔	✔
ABS counter	LS	rev	The travel distance from the home position is displayed as multi-revolution counter value of the absolution position encoder in the absolution position detection system.	✔	✔	—	✔	✔	✔	✔
			The travel distance from the home position is displayed as load side multi-revolution counter value in the absolution position detection system	—	—	✔	✔	✔	✔	✔
Load to motor inertia ratio	dC	Multiplier	The estimated ratio of the load inertia moment to the servo motor shaft inertia moment is displayed.	✔	✔	✔	✔	✔	✔	✔
Bus voltage	Pn	V	The voltage of main circuit converter (between P+ and N–) is displayed.	✔	✔	✔	✔	✔	✔	✔
Internal temperature of encoder	ETh	°C	Inside temperature of encoder detected by the encoder is displayed.	✔	✔	✔	✔	✔	—	✔
Settling time	ST	ms	Settling time is displayed. When it exceeds 1000 ms, "1000" will be displayed.	✔	✔	✔	✔	✔	✔	✔
Oscillation detection frequency	oF	Hz	Frequency at the time of oscillation detection is displayed.	✔	✔	✔	✔	✔	✔	✔
Number of tough drive operations	Td	times	The number of tough drive functions activated is displayed.	✔	✔	✔	✔	✔	✔	✔
Unit power consumption 1 (increment of 1 W)	PC1	W	Unit power consumption is displayed by increment of 1 W. Positive value indicate power running, and negative value indicate regeneration. The values in excess of ±99999 can be counted. However, the counter shows only the lower five digits of the actual value since the servo amplifier display is five digits.	✔	✔	✔	✔	✔	✔	✔
Unit power consumption 2 (increment of 1 kW)	PC2	kW	Unit power consumption is displayed by increment of 1 kW. Positive value indicate power running, and negative value indicate regeneration.	✔	✔	✔	✔	✔	✔	✔
Unit total power consumption 1 (increment of 1 Wh)	TPC1	Wh	Unit total power consumption is displayed by increment of 1 Wh. Positive value is cumulated during power running and negative value during regeneration. The values in excess of ±99999 can be counted. However, the counter shows only the lower five digits of the actual value since the servo amplifier display is five digits.	✔	✔	✔	✔	✔	✔	✔
Unit total power consumption 2 (increment of 100 kWh)	TPC2	100 kWh	Unit total power consumption is displayed by increment of 100 kWh. Positive value is cumulated during power running and negative value during regeneration.	✔	✔	✔	✔	✔	✔	✔
Load-side encoder Cumulative feedback pulses	FC	pulse	Feedback pulses from the load-side encoder are counted and displayed. The values in excess of ±99999 can be counted. However, the counter shows only the lower five digits of the actual value since the servo amplifier display is five digits. Press the "SET" button to reset the display value to zero. The value of minus is indicated by the lit decimal points in the upper four digits.	✔	✔	—	—	✔	—	—
Load-side encoder Droop pulses	FE	pulse	Droop pulses of the deviation counter between a load-side encoder and a command are displayed. When the count exceeds ±99999, it starts from 0. Negative value is indicated by the lit decimal points in the upper four digits. The display shows the average droop pulses of 128-time sampling at the rate of 444 [µs].	✔	✔	—	—	✔	—	—

Tab. A-10: *Status display list of MR-J4-A-RJ (2)*

Status display	Symbol	Unit	Description	Control mode ①			Operation mode ②			
				CP/BCD	CL	PS	Standard	Full.	Lin.	DD
Load-side encoder information 1 (1 pulse unit)	FCy1	pulse	The Z-phase counter of a load-side encoder is displayed in the encoder pulse unit. For an incremental linear encoder, the Z-phase counter is displayed. The value is counted up from 0 based on the home position (reference mark). For an absolute position linear encoder, the encoder absolute position is displayed. When the count exceeds 99999, it starts from 0.	✔	✔	—	—	✔	—	—
Load-side encoder information 1 (100000 pulses unit)	FCy2	100000 pulses	The Z-phase counter of a load-side encoder is displayed by increments of 100000 pulses. For an incremental linear encoder, the Z-phase counter is displayed. The value is counted up from 0 based on the home position (reference mark). For an absolute position linear encoder, the encoder absolute position is displayed. When the count exceeds 99999, it starts from 0.	✔	✔	—	—	✔	—	—
Load-side encoder information 2	FL5	rev	When an incremental linear encoder is used as the load-side encoder, the display shows 0. When an absolute position linear encoder is used as the load-side encoder, the display shows 0. When a rotary encoder is used as the load-side encoder, the display shows the value of the multi-revolution counter.	✔	✔	—	—	✔	—	—
Z-phase counter low	FCy1	pulse	The Z-phase counter is displayed in the encoder pulse unit. For an incremental linear encoder, the Z-phase counter is displayed. The value is counted up from 0 based on the home position (reference mark). For an absolute position linear encoder, the encoder absolute position is displayed. When the count exceeds 99999, it starts from 0.	✔	✔	✔	—	—	✔	—
Z-phase counter high	FCy2	100000 pulses	The Z-phase counter is displayed by increments of 100000 pulses. For an incremental linear encoder, the Z-phase counter is displayed. The value is counted up from 0 based on the home position (reference mark). For an absolute position linear encoder, the encoder absolute position is displayed. When the count exceeds 99999, it starts from 0.	✔	✔	✔	—	—	✔	—
Electrical angle low	ECy1	pulse	The servo motor electrical angle is displayed.	✔	✔	—	—	—	✔	—
Electrical angle high	ECy2	100000 pulses	The servo motor electrical angle is displayed by increments of 100000 pulses.	✔	✔	—	—	—	✔	—
Current position	PoS	10^{STM}µm $10^{(STM-4)}$ inch 10^{-3} degree pulse ③	When "□□0□" (positioning display) is set in parameter PT26, the current position is displayed as machine home position is 0. When "□□1□" (roll feed display) is set in parameter PT26, the actual current position is displayed as start position is 0. The values in excess of ±99999 can be counted. However, the counter shows only the lower five digits of the actual value since the servo amplifier display is five digits.	✔	✔	—	✔	✔	✔	✔

Tab. A-10: *Status display list of MR-J4-A-RJ (3)*

Status display	Symbol	Unit	Description	Control mode ①			Operation mode ②			
				CP/BCD	CL	PS	Standard	Full.	Lin.	DD
Command position	CPoS	10^{STM}µm $10^{(STM-4)}$ inch 10^{-3} degree pulse ③	When "□□0□" (positioning display) is set in parameter PT26, the command current position is displayed as machine home position is 0. When "□□1□" (roll feed display) is set in parameter PT26, turning on the start signal starts counting from 0 and a command current position to the target position is displayed in the automatic mode. The command positions of the selected point table are displayed at a stop. At the manual mode, the command positions of the selected point table are displayed. The values in excess of ±99999 can be counted. However, the counter shows only the lower five digits of the actual value since the servo amplifier display is five digits.	✔	✔	—	✔	✔	✔	✔
Command remaining distance	rn	10^{STM}µm $10^{(STM-4)}$ inch 10^{-3} degree pulse ③	Indicates the remaining distance to the command position of the currently selected point table, program and station. The values in excess of ±99999 can be counted. However, the counter shows only the lower five digits of the actual value since the servo amplifier display is five digits.	✔	✔	✔	✔	✔	✔	✔
Point table No./program No./ command station position	Pno	—	For the point table method and program method, the point table and program No. currently being executed are displayed. The selected number is displayed during a temporary stop or manual operation. For the indexer method, the command next station position is displayed.	✔	✔	✔	✔	✔	✔	✔
Step No.	Sno	—	The step No. of the program currently being executed is displayed. At a stop, 0 is displayed.	—	✔	—	✔	✔	✔	✔
Analog override voltage	oru	V	The analog override voltage is displayed.	✔	✔	—	✔	✔	✔	✔
Override level	or	%	The setting value of the override is displayed. When the override is disabled, 100% is displayed.	✔	✔	✔	✔	✔	✔	✔
Cam axis one cycle current value	CCyC	10^{STM}µm $10^{(STM-4)}$ inch 10^{-3} degree pulse ④	The current position in one cycle of CAM axis is displayed with the range of "0 to (cam axis one cycle length - 1)", the cam axis one cycle current value which is calculated from the travel distance input to the cam axis. When the simple cam function is disabled, 0 is always displayed. The values in excess of ±99999 can be counted. However, the counter shows only the lower five digits of the actual value since the servo amplifier display is five digits. Refer to the instruction manual (positioning mode) for detecting point.	✔	✔	—	✔	✔	✔	✔
Cam standard position	CbAS	10^{STM}µm $10^{(STM-4)}$ inch 10^{-3} degree pulse ③	A feed current value which is the standard position of the cam operation is displayed. When the simple cam function is disabled, 0 is always displayed. The values in excess of ±99999 can be counted. However, the counter shows only the lower five digits of the actual value since the servo amplifier display is five digits. Refer to the instruction manual (positioning mode) for detecting point.	✔	✔	—	✔	✔	✔	✔

Tab. A-10: *Status display list of MR-J4-A-RJ (4)*

Status display	Symbol	Unit	Description	Control mode ①			Operation mode ②			
				CP/BCD	CL	PS	Standard	Full.	Lin.	DD
Cam axis feed current value	CCMd	10^{STM}µm $10^{(STM-4)}$inch 10^{-3} degree pulse ③	A feed current value during the cam axis control is displayed. When the simple cam function is disabled, 0 is always displayed. The values in excess of ±99999 can be counted. However, the counter shows only the lower five digits of the actual value since the servo amplifier display is five digits. Refer to the instruction manual (positioning mode) for detecting point.	✔	✔	—	✔	✔	✔	✔
Cam No. in execution	Cno	—	Cam No. in execution is displayed. When the simple cam function is disabled, 0 is always displayed. Refer to the instruction manual (positioning mode) for detecting point.	✔	✔	—	✔	✔	✔	✔
Cam stroke amount in execution	CSTK	10^{STM}µm $10^{(STM-4)}$inch 10^{-3} degree pulse ③	Cam stroke amount in execution is displayed. When the simple cam function is disabled, 0 is always displayed. The values in excess of ±99999 can be counted. However, the counter shows only the lower five digits of the actual value since the servo amplifier display is five digits. Refer to the instruction manual (positioning mode) for detecting point.	✔	✔	—	✔	✔	✔	✔
Main axis current value	MCMd	10^{STM}µm $10^{(STM-4)}$inch 10^{-3} degree pulse ④	A current value of the input axis (synchronous encoder axis or servo input axis) is displayed. Unit is increment of input axis position. When the simple cam function is disabled, 0 is always displayed. The values in excess of ±99999 can be counted. However, the counter shows only the lower five digits of the actual value since the servo amplifier display is five digits. Refer to the instruction manual (positioning mode) for detecting point.	✔	✔	—	✔	✔	✔	✔
Main axis one cycle current value	MCyC	10^{STM}µm $10^{(STM-4)}$inch 10^{-3} degree pulse ④	The input travel amount of the input axis is displayed within the range of "0 and (cam axis one cycle length setting - 1)". Unit is an increment of cam axis one cycle. When the simple cam function is disabled, 0 is always displayed. The values in excess of ±99999 can be counted. However, the counter shows only the lower five digits of the actual value since the servo amplifier display is five digits. Refer to the instruction manual (positioning mode) for detecting point.	✔	✔	—	✔	✔	✔	✔

Tab. A-10: *Status display list of MR-J4-A-RJ (5)*

① CP: Positioning mode (point table method)
BCD: Positioning mode (point table method in the BCD input positioning operation)
This method is available only when the MR-D01 unit is connected.
Refer to the instruction manual (positioning mode) for details.
CL: Positioning mode (program method)
PS: Positioning mode (indexer method)

② Standard: Standard (semi closed loop system) use of the rotary servo motor
Full.: Fully closed loop system use of the rotary servo motor
Lin.: Linear servo motor use
DD: Direct drive (DD) motor use

③ The unit can be changed to µm/Inch/Degree/pulse in parameter PT01.

④ Depending on the setting of (Cam control data No. 30 Main shaft input axis selection), the parameters used to set the unit and feed length multiplication will change as follows. For details of each parameter, refer to the instruction manual (positioning mode).

Setting of (Cam control data No. 30)	Parameter for the unit setting	Parameter for the feed length multiplication setting
0 or 1	Pr. PT01	Pr. PT03
2	Cam control data No. 14	Cam control data No. 14

The status display item of the servo amplifier display shown at power-on can be changed by changing parameter PC36 settings.

A.2.2 Basic setting parameters (PA□□)

No.	Symbol	Name	Initial value	Unit	Operation mode				Control mode		
					Standard	Full.	Lin.	DD	CP/BCD	CL	PS
PA01	*STY	Operation mode	1000H	—	✔	✔	✔	✔	✔	✔	✔
PA02	*REG	Regenerative option	0000H	—	✔	✔	✔	✔	✔	✔	✔
PA03	*ABS	Absolute position detection system	0000H	—	✔	✔	✔	✔	✔	✔	✔
PA04	*AOP1	Function selection A-1	2000H	—	✔	✔	✔	✔	✔	✔	✔
PA05	*FBP	Number of command input pulses per revolution	10000	—	—	—	—	—	—	—	—
PA06	*CMX	Electronic gear numerator (command pulse multiplication numerator)	1	—	✔	✔	✔	✔	✔	✔	—
		Number of gear teeth on machine side	1	—	✔	—	—	✔	—	—	✔
PA07	*CDV	Electronic gear denominator (command pulse multiplication denominator)	1	—	✔	✔	✔	✔	✔	✔	—
		Number of gear teeth on servo motor side	1	—	✔	—	—	✔	—	—	✔
PA08	ATU	Auto tuning mode	0001H	—	✔	✔	✔	✔	✔	✔	✔
PA09	RSP	Auto tuning response	16	—	✔	✔	✔	✔	✔	✔	✔
PA10	INP	In-position range	100	µm 10^{-4} inch 10^{-3} degree pulse	✔	✔	✔	✔	✔	✔	✔
PA11	TLP	Forward rotation torque limit/positive direction thrust limit	100.0	%	✔	✔	✔	✔	✔	✔	✔
PA12	TLN	Reverse rotation torque limit/negative direction thrust limit	100.0	%	✔	✔	✔	✔	✔	✔	✔
PA13	*PLSS	Command pulse input form	0100H	—	✔	✔	✔	✔	✔	✔	✔
PA14	*POL	Rotation direction selection/travel direction selection	0	—	✔	✔	✔	✔	✔	✔	✔
PA15	*ENR	Encoder output pulses	4000	pulse/rev	✔	✔	✔	✔	✔	✔	✔
PA16	*ENR2	Encoder output pulses 2	1	—	✔	✔	✔	✔	✔	✔	✔
PA17	*MSR	Servo motor series setting	0000H	—	—	—	✔	—	✔	✔	✔
PA18	*MTY	Servo motor type setting	0000H	—	—	—	✔	—	✔	✔	✔
PA19	*BLK	Parameter writing inhibit	00AAH	—	✔	✔	✔	✔	✔	✔	✔
PA20	*TDS	Tough drive setting	0000H	—	✔	✔	✔	✔	✔	✔	✔
PA21	*AOP3	Function selection A-3	0001H	—	✔	✔	✔	✔	✔	✔	—
PA22	*PCS	Position control composition selection	0000H	—	✔	✔	✔	✔	✔	✔	✔
PA23	DRAT	Drive recorder arbitrary alarm trigger setting	0000H	—	✔	✔	✔	✔	✔	✔	✔
PA24	AOP4	Function selection A-4	0000H	—	✔	✔	✔	✔	✔	✔	✔
PA25	OTHOV	One-touch tuning - Overshoot permissible level	0	%	✔	✔	✔	✔	✔	✔	✔
PA26	*AOP5	Function selection A-5	0000H	—	✔	✔	✔	✔	✔	✔	✔
PA27	—	For manufacturer setting	0000H	—	—	—	—	—	—	—	—
PA28	—		0000H	—	—	—	—	—	—	—	—
PA29	—		0000H	—	—	—	—	—	—	—	—
PA30	—		0000H	—	—	—	—	—	—	—	—
PA31	—		0000H	—	—	—	—	—	—	—	—
PA32	—		0000H	—	—	—	—	—	—	—	—

Tab. A-11: *List of basic setting parameters for MR-J4-A-RJ*

NOTES

To enable the following parameters in a positioning mode, cycle the power after setting.

- PA06 (Electronic gear numerator (command pulse multiplication numerator)/Number of gear teeth on machine side)
- PA07 (Electronic gear denominator (command pulse multiplication denominator)/Number of gear teeth on servo motor side)

The following parameter cannot be used in the positioning mode.

- PA05 (Number of command input pulses per revolution)

A.2.3 Gain/filter setting parameters (PB□□)

No.	Symbol	Name	Initial value	Unit	Operation mode				Control mode		
					Standard	Full.	Lin.	DD	CP/BCD	CL	PS
PB01	FILT	Adaptive tuning mode (adaptive filter II)	0000H	—	✔	✔	✔	✔	✔	✔	✔
PB02	VRFT	Vibration suppression control tuning mode (advanced vibration suppression control II)	0000H	—	✔	✔	✔	✔	✔	✔	✔
PB03	PST	Position command acceleration/deceleration time constant (position smoothing)	0	ms	✔	✔	✔	✔	✔	✔	✔
PB04	FFC	Feed forward gain	0	%	✔	✔	✔	✔	✔	✔	✔
PB05	—	For manufacturer setting	500	—	—	—	—	—	—	—	—
PB06	GD2	Load to motor inertia ratio/load to motor mass ratio	7.00	Multiplier	✔	✔	✔	✔	✔	✔	✔
PB07	PG1	Model loop gain	15.0	rad/s	✔	✔	✔	✔	✔	✔	✔
PB08	PG2	Position loop gain	37.0	rad/s	✔	✔	✔	✔	✔	✔	✔
PB09	VG2	Speed loop gain	823	rad/s	✔	✔	✔	✔	✔	✔	✔
PB10	VIC	Speed integral compensation	33.7	ms	✔	✔	✔	✔	✔	✔	✔
PB11	VDC	Speed differential compensation	980	—	✔	✔	✔	✔	✔	✔	✔
PB12	OVA	Overshoot amount compensation	0	%	✔	✔	✔	✔	✔	✔	✔
PB13	NH1	Machine resonance suppression filter 1	4500	Hz	✔	✔	✔	✔	✔	✔	✔
PB14	NHQ1	Notch shape selection 1	0000H	—	✔	✔	✔	✔	✔	✔	✔
PB15	NH2	Machine resonance suppression filter 2	4500	Hz	✔	✔	✔	✔	✔	✔	✔
PB16	NHQ2	Notch shape selection 2	0000H	—	✔	✔	✔	✔	✔	✔	✔
PB17	NHF	Shaft resonance suppression filter	0000H	—	✔	✔	✔	✔	✔	✔	✔
PB18	LPF	Low-pass filter setting	3141	rad/s	✔	✔	✔	✔	✔	✔	✔
PB19	VRF11	Vibration suppression control 1 - Vibration frequency	100.0	Hz	✔	✔	✔	✔	✔	✔	✔
PB20	VRF12	Vibration suppression control 1 - Resonance frequency	100.0	Hz	✔	✔	✔	✔	✔	✔	✔
PB21	VRF13	Vibration suppression control 1 - Vibration frequency damping	0.00	—	✔	✔	✔	✔	✔	✔	✔
PB22	VRF14	Vibration suppression control 1 - Resonance frequency damping	0.00	—	✔	✔	✔	✔	✔	✔	✔
PB23	VFBF	Low-pass filter selection	0000H	—	✔	✔	✔	✔	✔	✔	✔
PB24	*MVS	Slight vibration suppression control	0000H	—	✔	✔	✔	✔	✔	✔	✔
PB25	*BOP1	Function selection B-1	0000H	—	✔	✔	✔	✔	✔	✔	✔
PB26	*CDP	Gain switching function	0000H	—	✔	✔	✔	✔	✔	✔	✔
PB27	CDL	Gain switching condition	10	kpulse/s pulse 1/min	✔	✔	✔	✔	✔	✔	✔
PB28	CDT	Gain switching time constant	1	ms	✔	✔	✔	✔	✔	✔	✔
PB29	GD2B	Load to motor inertia ratio/load to motor mass ratio after gain switching	7.00	Multiplier	✔	✔	✔	✔	✔	✔	✔
PB30	PG2B	Position loop gain after gain switching	0.0	rad/s	✔	✔	✔	✔	✔	✔	✔
PB31	VG2B	Speed loop gain after gain switching	0	rad/s	✔	✔	✔	✔	✔	✔	✔
PB32	VICB	Speed integral compensation after gain switching	0.0	ms	✔	✔	✔	✔	✔	✔	✔
PB33	VRF1B	Vibration suppression control 1 - Vibration frequency after gain switching	0.0	Hz	✔	✔	✔	✔	✔	✔	✔
PB34	VRF2B	Vibration suppression control 1 - Resonance frequency after gain switching	0.0	Hz	✔	✔	✔	✔	✔	✔	✔
PB35	VRF3B	Vibration suppression control 1 - Vibration frequency damping after gain switching	0.00	—	✔	✔	✔	✔	✔	✔	✔
PB36	VRF4B	Vibration suppression control 1 - Resonance frequency damping after gain switching	0.00	—	✔	✔	✔	✔	✔	✔	✔

Tab. A-12: *List of gain/filter setting parameters for MR-J4-A-RJ (1)*

No.	Symbol	Name	Initial value	Unit	Operation mode				Control mode		
					Standard	Full.	Lin.	DD	CP/BCD	CL	PS
PB37	—	For manufacturer setting	1600	—	—	—	—	—	—	—	—
PB38	—		0.00	—	—	—	—	—	—	—	—
PB39	—		0.00	—	—	—	—	—	—	—	—
PB40	—		0.00	—	—	—	—	—	—	—	—
PB41	—		0000H	—	—	—	—	—	—	—	—
PB42	—		0000H	—	—	—	—	—	—	—	—
PB43	—		0000H	—	—	—	—	—	—	—	—
PB44	—		0.00	—	—	—	—	—	—	—	—
PB45	CNHF	Command notch filter	0000H	—	✔	✔	✔	✔	✔	✔	✔
PB46	NH3	Machine resonance suppression filter 3	4500	Hz	✔	✔	✔	✔	✔	✔	✔
PB47	NHQ3	Notch shape selection 3	0000H	—	✔	✔	✔	✔	✔	✔	✔
PB48	NH4	Machine resonance suppression filter 4	4500	Hz	✔	✔	✔	✔	✔	✔	✔
PB49	NHQ4	Notch shape selection 4	0000H	—	✔	✔	✔	✔	✔	✔	✔
PB50	NH5	Machine resonance suppression filter 5	4500	Hz	✔	✔	✔	✔	✔	✔	✔
PB51	NHQ5	Notch shape selection 5	0000H	—	✔	✔	✔	✔	✔	✔	✔
PB52	VRF21	Vibration suppression control 2 - Vibration frequency	100.0	Hz	✔	✔	✔	✔	✔	✔	✔
PB53	VRF22	Vibration suppression control 2 - Resonance frequency	100.0	Hz	✔	✔	✔	✔	✔	✔	✔
PB54	VRF23	Vibration suppression control 2 - Vibration frequency damping	0.00	—	✔	✔	✔	✔	✔	✔	✔
PB55	VRF24	Vibration suppression control 2 - Resonance frequency damping	0.00	—	✔	✔	✔	✔	✔	✔	✔
PB56	VRF21B	Vibration suppression control 2 - Vibration frequency after gain switching	0.0	Hz	✔	✔	✔	✔	✔	✔	✔
PB57	VRF22B	Vibration suppression control 2 - Resonance frequency after gain switching	0.0	Hz	✔	✔	✔	✔	✔	✔	✔
PB58	VRF23B	Vibration suppression control 2 - Vibration frequency damping after gain switching	0.00	—	✔	✔	✔	✔	✔	✔	✔
PB59	VRF24B	Vibration suppression control 2 - Resonance frequency damping after gain switching	0.00	—	✔	✔	✔	✔	✔	✔	✔
PB60	PG1B	Model loop gain after gain switching	0.0	rad/s	✔	✔	✔	✔	✔	✔	✔
PB61	—	For manufacturer setting	0.0	—	—	—	—	—	—	—	—
PB62	—		0000H	—	—	—	—	—	—	—	—
PB63	—		0000H	—	—	—	—	—	—	—	—
PB64	—		0000H	—	—	—	—	—	—	—	—

Tab. A-12: *List of gain/filter setting parameters for MR-J4-A-RJ (2)*

A.2.4 Extension setting parameters (PC□□)

No.	Symbol	Name	Initial value	Unit	Operation mode				Control mode		
					Standard	Full.	Lin.	DD	CP/BCD	CL	PS
PC01	STA	JOG operation acceleration time constant	0	ms	✔	✔	✔	✔	—	✔	—
		Acceleration time constant 1			✔	—	—	✔	—	—	✔
PC02	STB	JOG operation deceleration time constant	0	ms	✔	✔	✔	✔	—	✔	—
		Deceleration time constant 1			✔	—	—	✔	—	—	✔
PC03	*STC	S-pattern acceleration/deceleration time constant	0	ms	✔	—	✔	✔	✔	✔	—
PC04	TQC	Torque command time constant/thrust command time constant	0	—	—	—	—	—	—	—	—
PC05	SC1	Automatic operation speed 1	100	1/min	✔	—	—	✔	—	—	✔
PC06	SC2	Automatic operation speed 2	500	1/min	✔	—	—	✔	—	—	✔
PC07	SC3	Manual operation speed 1	1000	1/min	✔	—	—	✔	—	—	✔
PC08	SC4	Internal speed command 4	200	1/min mm/s	—	—	—	—	—	—	—
		Internal speed limit 4			—	—	—	—	—	—	—
PC09	SC5	Internal speed command 5	300	1/min mm/s	—	—	—	—	—	—	—
		Internal speed limit 5			—	—	—	—	—	—	—
PC10	SC6	Internal speed command 6	500	1/min mm/s	—	—	—	—	—	—	—
		Internal speed limit 6			—	—	—	—	—	—	—
PC11	SC7	Internal speed command 7	800	1/min mm/s	—	—	—	—	—	—	—
		Internal speed limit 7			—	—	—	—	—	—	—
PC12	VCM	Analog speed command - Maximum speed	0	1/min mm/s	—	—	—	—	—	—	—
		Analog speed limit - Maximum speed			—	—	—	—	—	—	—
PC13	TLC	Analog torque/thrust command maximum output	100.0	%	—	—	—	—	—	—	—
PC14	MOD1	Analog monitor 1 output	0000H	—	✔	✔	✔	✔	✔	✔	✔
PC15	MOD2	Analog monitor 2 output	0001H	—	✔	✔	✔	✔	✔	✔	✔
PC16	MBR	Electromagnetic brake sequence output	0	ms	✔	✔	✔	✔	✔	✔	✔
PC17	ZSP	Zero speed	50	1/min mm/s	✔	✔	✔	✔	✔	✔	✔
PC18	*BPS	Alarm history clear	0000H	—	✔	✔	✔	✔	✔	✔	✔
PC19	*ENRS	Encoder output pulse selection	0000H	—	✔	✔	✔	✔	✔	✔	✔
PC20	*SNO	Station No. setting	0	station	✔	✔	✔	✔	✔	✔	✔
PC21	*SOP	RS-422 communication function selection	0000H	—	✔	✔	✔	✔	✔	✔	✔
PC22	*COP1	Function selection C-1	0000H	—	✔	✔	✔	✔	✔	✔	✔
PC23	*COP2	Function selection C-2	0000H	—	—	—	—	—	—	—	—
PC24	*COP3	Function selection C-3	0000H	—	✔	✔	✔	✔	✔	✔	✔
PC25	—	For manufacturer setting	0000H	—	—	—	—	—	—	—	—
PC26	*COP5	Function selection C-5	0000H	—	✔	✔	✔	✔	✔	✔	✔
PC27	*COP6	Function selection C-6	0000H	—	✔	✔	✔	✔	✔	✔	✔
PC28	*COP7	Function selection C-7	0000H	—	—	—	✔	—	✔	✔	—
PC29	—	For manufacturer setting	0000H	—	—	—	—	—	—	—	—
PC30	STA2	Home position return acceleration time constant	0	ms	✔	—	✔	✔	—	✔	—
		Acceleration time constant 2			✔	—	—	✔	—	—	✔
PC31	STB2	Home position return deceleration time constant	0	ms	✔	—	✔	✔	—	✔	—
		Deceleration time constant 2			✔	—	—	✔	—	—	✔
PC32	CMX2	Command input pulse multiplication numerator 2	1	—	—	—	—	—	—	—	—
PC33	CMX3	Command input pulse multiplication numerator 3	1	—	—	—	—	—	—	—	—

Tab. A-13: *List of extension setting parameters for MR-J4-A-RJ (1)*

No.	Symbol	Name	Initial value	Unit	Operation mode				Control mode		
					Standard	Full.	Lin.	DD	CP/BCD	CL	PS
PC34	CMX4	Command input pulse multiplication numerator 4	1	—	—	—	—	—	—	—	—
PC35	TL2	Internal torque limit 2/internal thrust limit 2	100.0	%	✔	✔	✔	✔	✔	✔	✔
PC36	*DMD	Status display selection	0000H	—	✔	✔	✔	✔	✔	✔	✔
PC37	VCO	Analog override offset	0	mV	✔	✔	✔	✔	✔	✔	—
PC38	TPO	Analog torque limit offset	0	mV	✔	✔	✔	✔	✔	✔	✔
PC39	MO1	Analog monitor 1 offset	0	mV	✔	✔	✔	✔	✔	✔	✔
PC40	MO2	Analog monitor 2 offset	0	mV	✔	✔	✔	✔	✔	✔	✔
PC41	—	For manufacturer setting	0	—	—	—	—	—	—	—	—
PC42	—		0	—	—	—	—	—	—	—	—
PC43	ERZ	Error excessive alarm detection level	0	rev mm	✔	✔	✔	✔	✔	✔	✔
PC44	*COP9	Function selection C-9	0000H	—	—	✔	—	—	✔	✔	—
PC45	*COPA	Function selection C-A	0000H	—	—	✔	✔	—	✔	✔	—
PC46	—	For manufacturer setting	0	—	—	—	—	—	—	—	—
PC47	—		0	—	—	—	—	—	—	—	—
PC48	—		0	—	—	—	—	—	—	—	—
PC49	—		0	—	—	—	—	—	—	—	—
PC50	—		0000H	—	—	—	—	—	—	—	—
PC51	RSBR	Forced stop deceleration time constant	100	ms	✔	✔	✔	✔	✔	✔	✔
PC52	—	For manufacturer setting	0	—	—	—	—	—	—	—	—
PC53	—		0	—	—	—	—	—	—	—	—
PC54	RSUP1	Vertical axis freefall prevention compensation amount	0	0.0001rev 0.01mm	✔	✔	✔	✔	✔	✔	✔
PC55	—	For manufacturer setting	0	—	—	—	—	—	—	—	—
PC56	—		100	—	—	—	—	—	—	—	—
PC57	—		0000H	—	—	—	—	—	—	—	—
PC58	—		0	—	—	—	—	—	—	—	—
PC59	—		0000H	—	—	—	—	—	—	—	—
PC60	*COPD	Function selection C-D	0000H	—	✔	—	—	—	✔	✔	—
PC61	—	For manufacturer setting	0000H	—	—	—	—	—	—	—	—
PC62	—		0000H	—	—	—	—	—	—	—	—
PC63	—		0000H	—	—	—	—	—	—	—	—
PC64	—		0000H	—	—	—	—	—	—	—	—
PC65	—		0000H	—	—	—	—	—	—	—	—
PC66	LPSPL	Mark detection range + (lower three digits)	0	10^{STM}µm $10^{(STM-4)}$ inch 10^{-3} degree pulse	✔	✔	✔	✔	✔	✔	—
PC67	LPSPH	Mark detection range + (upper three digits)	0	10^{STM}µm $10^{(STM-4)}$ inch 10^{-3} degree pulse	✔	✔	✔	✔	✔	✔	—
PC68	LPSNL	Mark detection range - (lower three digits)	0	10^{STM}µm $10^{(STM-4)}$ inch 10^{-3} degree pulse	✔	✔	✔	✔	✔	✔	—

Tab. A-13: *List of extension setting parameters for MR-J4-A-RJ (2)*

No.	Symbol	Name	Initial value	Unit	Operation mode				Control mode		
					Standard	Full.	Lin.	DD	CP/BCD	CL	PS
PC69	LPSNH	Mark detection range - (upper three digits)	0	10^{STM}µm $10^{(STM-4)}$ inch 10^{-3} degree pulse	✔	✔	✔	✔	✔	✔	—
PC70	*SNOM	Modbus®/RTU communication station number setting	0	—	✔	✔	✔	✔	✔	✔	✔
PC71	*COPF	Function selection C-F	0040H	—	✔	✔	✔	✔	✔	✔	✔
PC72	*COPG	Function selection C-G	0000H	—	✔	✔	✔	✔	✔	✔	✔
PC73	ERW	Error excessive warning level	0	—	✔	✔	✔	✔	✔	✔	✔
PC74	—	For manufacturer setting	0000H	—	—	—	—	—	—	—	—
PC75	—		0000H	—	—	—	—	—	—	—	—
PC76	—		0000H	—	—	—	—	—	—	—	—
PC77	—		0000H	—	—	—	—	—	—	—	—
PC78	—		0000H	—	—	—	—	—	—	—	—
PC79	—		0000H	—	—	—	—	—	—	—	—
PC80	—		0000H	—	—	—	—	—	—	—	—

Tab. A-13: *List of extension setting parameters for MR-J4-A-RJ (3)*

NOTES

To enable the following parameters in a positioning mode, cycle the power after setting.

– PC03 (S-pattern acceleration/deceleration time constant)

The following parameter cannot be used in the positioning mode.

– PC04 (Torque command time constant/thrust command time constant)

– PC08 (Internal speed command 4/internal speed limit 4)

– PC09 (Internal speed command 5/internal speed limit 5)

– PC10 (Internal speed command 6/internal speed limit 6)

– PC11 (Internal speed command 7/internal speed limit 7)

– PC12 (Analog speed command - Maximum speed/Analog speed limit - Maximum speed)

– PC13 (Analog torque/thrust command maximum output)

– PC23 (Function selection C-2)

– PC32 (Command input pulse multiplication numerator 2)

– PC33 (Command input pulse multiplication numerator 3)

– PC34 (Command input pulse multiplication numerator 4)

The following parameters are used for Modbus®/RTU communication. For details, refer to “MR-J4-A-RJ Servo Amplifier Instruction Manual (Modbus®/RTU communication)”.

– Pr. PC70 (Modbus®/RTU communication station number setting)

– Pr. PC71 (Function selection C-F)

– Pr. PC72 (Function selection C-G)

Using the Modbus®/RTU communication function prevents the RS-422/RS-485 communication function (Mitsubishi general-purpose AC servo protocol) from being used, and vice versa. They cannot be used together.

A.2.5 I/O setting parameters (PD□□)

No.	Symbol	Name	Initial value	Unit	Operation mode				Control mode		
					Standard	Full.	Lin.	DD	CP/BCD	CL	PS
PD01	*DIA1	Input signal automatic on selection 1	0000H	—	✔	✔	✔	✔	✔	✔	✔
PD02	—	For manufacturer setting	0000H	—	—	—	—	—	—	—	—
PD03	*DI1L	Input device selection 1L	0202H	—	—	—	—	—	—	—	—
PD04	*DI1H	Input device selection 1H	0202H	—	✔	✔	✔	✔	✔	✔	✔
PD05	*DI2L	Input device selection 2L	2100H	—	—	—	—	—	—	—	—
PD06	*DI2H	Input device selection 2H	2021H	—	✔	✔	✔	✔	✔	✔	✔
PD07	*DI3L	Input device selection 3L	0704H	—	—	—	—	—	—	—	—
PD08	*DI3H	Input device selection 3H	0707H	—	✔	✔	✔	✔	✔	✔	✔
PD09	*DI4L	Input device selection 4L	0805H	—	—	—	—	—	—	—	—
PD10	*DI4H	Input device selection 4H	0808H	—	✔	✔	✔	✔	✔	✔	✔
PD11	*DI5L	Input device selection 5L	0303H	—	—	—	—	—	—	—	—
PD12	*DI5H	Input device selection 5H	3803H	—	✔	✔	✔	✔	✔	✔	✔
PD13	*DI6L	Input device selection 6L	2006H	—	—	—	—	—	—	—	—
PD14	*DI6H	Input device selection 6H	3920H	—	✔	✔	✔	✔	✔	✔	✔
PD15	—	For manufacturer setting	0000H	—	—	—	—	—	—	—	—
PD16	—		0000H	—	—	—	—	—	—	—	—
PD17	*DI8L	Input device selection 8L	0A0AH	—	—	—	—	—	—	—	—
PD18	*DI8H	Input device selection 8H	0A00H	—	✔	✔	✔	✔	✔	✔	✔
PD19	*DI9L	Input device selection 9L	0B0BH	—	—	—	—	—	—	—	—
PD20	*DI9H	Input device selection 9H	0B00H	—	✔	✔	✔	✔	✔	✔	✔
PD21	*DI10L	Input device selection 10L	2323H	—	—	—	—	—	—	—	—
PD22	*DI10H	Input device selection 10H	2B23H	—	✔	✔	✔	✔	✔	✔	✔
PD23	*DO1	Output device selection 1	0004H	—	✔	✔	✔	✔	✔	✔	✔
PD24	*DO2	Output device selection 2	000CH	—	✔	✔	✔	✔	✔	✔	✔
PD25	*DO3	Output device selection 3	0004H	—	✔	✔	✔	✔	✔	✔	✔
PD26	*DO4	Output device selection 4	0007H	—	✔	✔	✔	✔	✔	✔	✔
PD27	—	For manufacturer setting	0003H	—	—	—	—	—	—	—	—
PD28	*DO6	Output device selection 6	0002H	—	✔	✔	✔	✔	✔	✔	✔
PD29	*DIF	Input filter setting	0004H	—	✔	✔	✔	✔	✔	✔	✔
PD30	*DOP1	Function selection D-1	0000H	—	✔	✔	✔	✔	✔	✔	✔
PD31	*DOP2	Function selection D-2	0000H	—	✔	✔	✔	✔	✔	✔	—
PD32	*DOP3	Function selection D-3	0000H	—	✔	✔	✔	✔	✔	✔	✔
PD33	*DOP4	Function selection D-4	0000H	—	✔	✔	✔	✔	✔	✔	✔
PD34	DOP5	Function selection D-5	0000H	—	✔	✔	✔	✔	✔	✔	✔
PD35	—	For manufacturer setting	0000H	—	—	—	—	—	—	—	—
PD36	—		0000H	—	—	—	—	—	—	—	—
PD37	—		0000H	—	—	—	—	—	—	—	—
PD38	—		0	—	—	—	—	—	—	—	—
PD39	—		0	—	—	—	—	—	—	—	—
PD40	—		0	—	—	—	—	—	—	—	—
PD41	*DIA3	Input signal automatic on selection 3	0000H	—	✔	✔	✔	✔	✔	✔	✔
PD42	*DIA4	Input signal automatic on selection 4	0000H	—	✔	✔	✔	✔	✔	✔	✔

Tab. A-14: *List of I/O setting parameters for MR-J4-A-RJ (1)*

No.	Symbol	Name	Initial value	Unit	Operation mode				Control mode		
					Standard	Full.	Lin.	DD	CP/BCD	CL	PS
PD43	*DI11L	Input device selection 11L	0000H	—	—	—	—	—	—	—	—
PD44	*DI11H	Input device selection 11H	3A00H	—	✔	✔	✔	✔	✔	✔	✔
PD45	*DI12L	Input device selection 12L	0000H	—	—	—	—	—	—	—	—
PD46	*DI12H	Input device selection 12H	3B00H	—	✔	✔	✔	✔	✔	✔	✔
PD47	*DO7	Output device selection 7	0000H	—	✔	✔	✔	✔	✔	✔	✔
PD48	—	For manufacturer setting	0000H	—	—	—	—	—	—	—	—

Tab. A-14: *List of I/O setting parameters for MR-J4-A-RJ (2)*

NOTE

The following parameter cannot be used in the positioning mode.

- PD03 (Input device selection 1L)
- PD05 (Input device selection 2L)
- PD07 (Input device selection 3L)
- PD09 (Input device selection 4L)
- PD11 (Input device selection 5L)
- PD13 (Input device selection 6L)
- PD17 (Input device selection 8L)
- PD19 (Input device selection 9L)
- PD21 (Input device selection 10L)
- PD43 (Input device selection 11L)
- PD45 (Input device selection 12L)

A.2.6 Extension setting 2 parameters (PE□□)

No.	Symbol	Name	Initial value	Unit	Operation mode				Control mode		
					Standard	Full.	Lin.	DD	CP/BCD	CL	PS
PE01	*FCT1	Fully closed loop function selection 1	0000H	—	—	—	—	—	—	—	—
PE02	—	For manufacturer setting	0000H	—	—	—	—	—	—	—	—
PE03	*FCT2	Fully closed loop function selection 2	0003H	—	—	✔	—	—	✔	✔	—
PE04	*FBN	Fully closed loop control - Feedback pulse electronic gear 1 - Numerator	1	—	—	✔	—	—	✔	✔	—
PE05	*FBD	Fully closed loop control - Feedback pulse electronic gear 1 - Denominator	1	—	—	✔	—	—	✔	✔	—
PE06	BC1	Fully closed loop control - Speed deviation error detection level	400	1/min	—	✔	—	—	✔	✔	—
PE07	BC2	Fully closed loop control - Position deviation error detection level	100	kpulse	—	✔	—	—	✔	✔	—
PE08	DUF	Fully closed loop dual feedback filter	10	rad/s	—	✔	—	—	✔	✔	—
PE09	—	For manufacturer setting	0000H	—	—	✔	—	—	✔	✔	—
PE10	FCT3	Fully closed loop function selection 3	0000H	—	—	✔	—	—	✔	✔	—
PE11	—	For manufacturer setting	0000H	—	—	—	—	—	—	—	—
PE12	—		0000H	—	—	—	—	—	—	—	—
PE13	—		0000H	—	—	—	—	—	—	—	—
PE14	—		0111H	—	—	—	—	—	—	—	—
PE15	—		20	—	—	—	—	—	—	—	—
PE16	—		0000H	—	—	—	—	—	—	—	—
PE17	—		0000H	—	—	—	—	—	—	—	—
PE18	—		0000H	—	—	—	—	—	—	—	—
PE19	—		0000H	—	—	—	—	—	—	—	—
PE20	—		0000H	—	—	—	—	—	—	—	—
PE21	—		0000H	—	—	—	—	—	—	—	—
PE22	—		0000H	—	—	—	—	—	—	—	—
PE23	—		0000H	—	—	—	—	—	—	—	—
PE24	—		0000H	—	—	—	—	—	—	—	—
PE25	—		0000H	—	—	—	—	—	—	—	—
PE26	—		0000H	—	—	—	—	—	—	—	—
PE27	—		0000H	—	—	—	—	—	—	—	—
PE28	—		0000H	—	—	—	—	—	—	—	—
PE29	—		0000H	—	—	—	—	—	—	—	—
PE30	—		0000H	—	—	—	—	—	—	—	—
PE31	—		0000H	—	—	—	—	—	—	—	—
PE32	—		0000H	—	—	—	—	—	—	—	—
PE33	—		0000H	—	—	—	—	—	—	—	—
PE34	*FBN2	Fully closed loop control - Feedback pulse electronic gear 2 - Numerator	1	—	—	✔	—	—	✔	✔	—
PE35	*FBD2	Fully closed loop control - Feedback pulse electronic gear 2 - Denominator	1	—	—	✔	—	—	✔	✔	—
PE36	—	For manufacturer setting	0.0	—	—	—	—	—	—	—	—
PE37	—		0.00	—	—	—	—	—	—	—	—
PE38	—		0.00	—	—	—	—	—	—	—	—
PE39	—		20	—	—	—	—	—	—	—	—
PE40	—		0000H	—	—	—	—	—	—	—	—
PE41	EOP3	Function selection E-3	0000H	—	✔	✔	✔	✔	✔	✔	✔

Tab. A-15: *List of extension setting 2 parameters for MR-J4-A-RJ (1)*

No.	Symbol	Name	Initial value	Unit	Operation mode				Control mode		
					Standard	Full.	Lin.	DD	CP/BCD	CL	PS
PE42	—	For manufacturer setting	0	—	—	—	—	—	—	—	—
PE43	—		0.0	—	—	—	—	—	—	—	—
PE44	LMCP	Lost motion compensation positive-side compensation value selection	0	0.01%	✔	✔	✔	✔	✔	✔	✔
PE45	LMCN	Lost motion compensation negative-side compensation value selection	0	0.01%	✔	✔	✔	✔	✔	✔	✔
PE46	LMFLT	Lost motion filter setting	0	0.1 ms	✔	✔	✔	✔	✔	✔	✔
PE47	TOF	Torque offset	0	0.01%	✔	✔	—	—	✔	✔	✔
PE48	*LMOP	Lost motion compensation function selection	0000H	—	✔	✔	✔	✔	✔	✔	✔
PE49	LMCD	Lost motion compensation timing	0	0.1 ms	✔	✔	✔	✔	✔	✔	✔
PE50	LMCT	Lost motion compensation non-sensitive band	0	pulse kpulse	✔	✔	✔	✔	✔	✔	✔
PE51	—	For manufacturer setting	0000H	—	—	—	—	—	—	—	—
PE52	—		0000H	—	—	—	—	—	—	—	—
PE53	—		0000H	—	—	—	—	—	—	—	—
PE54	—		0000H	—	—	—	—	—	—	—	—
PE55	—		0000H	—	—	—	—	—	—	—	—
PE56	—		0000H	—	—	—	—	—	—	—	—
PE57	—		0000H	—	—	—	—	—	—	—	—
PE58	—		0000H	—	—	—	—	—	—	—	—
PE59	—		0000H	—	—	—	—	—	—	—	—
PE60	—		0000H	—	—	—	—	—	—	—	—
PE61	—		0.00	—	—	—	—	—	—	—	—
PE62	—		0.00	—	—	—	—	—	—	—	—
PE63	—		0.00	—	—	—	—	—	—	—	—
PE64	—		0.00	—	—	—	—	—	—	—	—

Tab. A-15: *List of extension setting 2 parameters for MR-J4-A-RJ (2)*

NOTE

The following parameter cannot be used in the positioning mode.

– PE01 (Fully closed loop function selection 1)

A.2.7 Extension setting 3 parameters (PF□□)

No.	Symbol	Name	Initial value	Unit	Operation mode				Control mode		
					Standard	Full.	Lin.	DD	CP/BCD	CL	PS
PF01	—	For manufacturer setting	0000H	—	—	—	—	—	—	—	—
PF02	—		0000H	—	—	—	—	—	—	—	—
PF03	—		0000H	—	—	—	—	—	—	—	—
PF04	—		0	—	—	—	—	—	—	—	—
PF05	—		0	—	—	—	—	—	—	—	—
PF06	—		0000H	—	—	—	—	—	—	—	—
PF07	—		1	—	—	—	—	—	—	—	—
PF08	—		1	—	—	—	—	—	—	—	—
PF09	*FOP5	Function selection F-5	0000H	—	✔	✔	—	—	✔	✔	✔
PF10	—	For manufacturer setting	0000H	—	—	—	—	—	—	—	—
PF11	—		0000H	—	—	—	—	—	—	—	—
PF12	—		10000	—	—	—	—	—	—	—	—
PF13	—		100	—	—	—	—	—	—	—	—
PF14	—		100	—	—	—	—	—	—	—	—
PF15	DBT	Electronic dynamic brake operating time	2000	ms	✔	✔	—	—	✔	✔	✔
PF16	—	For manufacturer setting	0000H	—	—	—	—	—	—	—	—
PF17	—		10	—	—	—	—	—	—	—	—
PF1	—		0000H	—	—	—	—	—	—	—	—
PF19	—		0000H	—	—	—	—	—	—	—	—
PF20	—		0000H	—	—	—	—	—	—	—	—
PF21	DRT	Drive recorder switching time setting	0	s	✔	✔	✔	✔	✔	✔	✔
PF22	—	For manufacturer setting	200	—	—	—	—	—	—	—	—
PF23	OSCL1	Vibration tough drive - Oscillation detection level	50	%	✔	✔	✔	✔	✔	✔	✔
PF24	*OSCL2	Vibration tough drive function selection	0000H	—	✔	✔	✔	✔	✔	✔	✔
PF25	CVAT	SEMI-F47 function - Instantaneous power failure detection time	200	ms	✔	✔	✔	✔	✔	✔	✔
PF26	—	For manufacturer setting	0	—	—	—	—	—	—	—	—
PF27	—		0	—	—	—	—	—	—	—	—
PF28	—		0	—	—	—	—	—	—	—	—
PF29	—		0000H	—	—	—	—	—	—	—	—
PF30	—		0	—	—	—	—	—	—	—	—
PF31	FRIC	Machine diagnosis function - Friction judgement speed	0	1/min mm/s	✔	✔	✔	✔	✔	✔	✔
PF32	—	For manufacturer setting	50	—	—	—	—	—	—	—	—
PF33	—		0000H	—	—	—	—	—	—	—	—
PF34	*SOP3	RS-422 communication function selection 3	0000H	—	✔	✔	✔	✔	✔	✔	✔
PF35	—	For manufacturer setting	0000H	—	—	—	—	—	—	—	—
PF36	—		0000H	—	—	—	—	—	—	—	—
PF37	—		0000H	—	—	—	—	—	—	—	—
PF38	—		0000H	—	—	—	—	—	—	—	—
PF39	—		0000H	—	—	—	—	—	—	—	—
PF40	—		0	—	—	—	—	—	—	—	—
PF41	—		0	—	—	—	—	—	—	—	—

Tab. A-16: *List of extension setting 3 parameters for MR-J4-A-RJ (1)*

No.	Symbol	Name	Initial value	Unit	Operation mode				Control mode		
					Standard	Full.	Lin.	DD	CP/BCD	CL	PS
PF42	—	For manufacturer setting	0	—	—	—	—	—	—	—	—
PF43	—		0	—	—	—	—	—	—	—	—
PF44	—		0000H	—	—	—	—	—	—	—	—
PF45	*FOP12	Function selection F-12	0000H	—	✔	✔	✔	✔	✔	✔	✔
PF46	MIC	Modbus®/RTU communication time out selection	0	s	✔	✔	✔	✔	✔	✔	✔
PF47	—	For manufacturer setting	0000H	—	—	—	—	—	—	—	—
PF48	—		0000H	—	—	—	—	—	—	—	—

Tab. A-16: *List of extension setting 3 parameters for MR-J4-A-RJ (2)*

NOTES

The following parameters are used for Modbus®/RTU communication. For details, refer to "MR-J4-A-RJ Servo Amplifier Instruction Manual (Modbus®/RTU communication)"

– Pr. PF45 (Function selection F-12)

– Pr. PF46 (Modbus®/RTU communication time-out selection)

Using the Modbus®/RTU communication function prevents the RS-422/RS-485 communication function (Mitsubishi general-purpose AC servo protocol) from being used, and vice versa. They cannot be used together.

A.2.8 Linear servo motor/DD motor setting parameters (PL□□)

No.	Symbol	Name	Initial value	Unit	Operation mode				Control mode		
					Standard	Full.	Lin.	DD	CP/BCD	CL	PS
PL01	*LIT1	Linear servo motor/DD motor function selection 1	0301H	—	—	—	✔	✔	✔	✔	✔
PL02	*LIM	Linear encoder resolution - Numerator	1000	µm	—	—	✔	—	✔	✔	—
PL03	*LID	Linear encoder resolution - Denominator	1000	µm	—	—	✔	—	✔	✔	—
PL04	*LIT2	Linear servo motor/DD motor function selection 2	0003H	—	—	—	✔	✔	✔	✔	✔
PL05	LB1	Position deviation error detection level	0	mm 0.01 rev	—	—	✔	✔	✔	✔	✔
PL06	LB2	Speed deviation error detection level	0	1/min mm/s	—	—	✔	✔	✔	✔	✔
PL07	LB3	Torque/thrust deviation error detection level	100	%	—	—	✔	✔	✔	✔	✔
PL08	*LIT3	Linear servo motor/DD motor function selection 3	0010H	—	—	—	✔	✔	✔	✔	✔
PL09	LPWM	Magnetic pole detection voltage level	30	%	—	—	✔	✔	✔	✔	✔
PL10	—	For manufacturer setting	5	—	—	—	—	—	—	—	—
PL11	—		100	—	—	—	—	—	—	—	—
PL12	—		500	—	—	—	—	—	—	—	—
PL13	—		0000H	—	—	—	—	—	—	—	—
PL14	—		0000H	—	—	—	—	—	—	—	—
PL15	—		20	—	—	—	—	—	—	—	—
PL16	—		0	—	—	—	—	—	—	—	—
PL17	LTSTS	Magnetic pole detection - Minute position detection method - Function selection	0000H	—	—	—	✔	✔	✔	✔	✔
PL18	IDLV	Magnetic pole detection - Minute position detection method - Identification signal amplitude	0	%	—	—	✔	✔	✔	✔	✔
PL19	—	For manufacturer setting	0	—	—	—	—	—	—	—	—
PL20	—		0	—	—	—	—	—	—	—	—
PL21	—		0	—	—	—	—	—	—	—	—
PL22	—		0	—	—	—	—	—	—	—	—
PL23	—		0000H	—	—	—	—	—	—	—	—
PL24	—		0	—	—	—	—	—	—	—	—
PL25	—		0000H	—	—	—	—	—	—	—	—
PL26	—		0000H	—	—	—	—	—	—	—	—
PL27	—		0000H	—	—	—	—	—	—	—	—
PL28	—		0000H	—	—	—	—	—	—	—	—
PL29	—		0000H	—	—	—	—	—	—	—	—
PL30	—		0000H	—	—	—	—	—	—	—	—
PL31	—		0000H	—	—	—	—	—	—	—	—
PL32	—		0000H	—	—	—	—	—	—	—	—
PL33	—		0000H	—	—	—	—	—	—	—	—
PL34	—		0000H	—	—	—	—	—	—	—	—
PL35	—		0000H	—	—	—	—	—	—	—	—
PL36	—		0000H	—	—	—	—	—	—	—	—
PL37	—		0000H	—	—	—	—	—	—	—	—
PL38	—		0000H	—	—	—	—	—	—	—	—
PL39	—		0000H	—	—	—	—	—	—	—	—

Tab. A-17: *List of linear servo motor/DD motor setting parameters for MR-J4-A-RJ (1)*

No.	Symbol	Name	Initial value	Unit	Operation mode				Control mode		
					Standard	Full.	Lin.	DD	CP/BCD	CL	PS
PL40	—	For manufacturer setting	0000H	—	—	—	—	—	—	—	—
PL41	—		0000H	—	—	—	—	—	—	—	—
PL42	—		0000H	—	—	—	—	—	—	—	—
PL43	—		0000H	—	—	—	—	—	—	—	—
PL44	—		0000H	—	—	—	—	—	—	—	—
PL45	—		0000H	—	—	—	—	—	—	—	—
PL46	—		0000H	—	—	—	—	—	—	—	—
PL47	—		0000H	—	—	—	—	—	—	—	—
PL48	—		0000H	—	—	—	—	—	—	—	—

Tab. A-17: *List of linear servo motor/DD motor setting parameters for MR-J4-A-RJ (2)*

A.2.9 Option setting parameters (Po□□)

No.	Symbol	Name	Initial value	Unit	Operation mode				Control mode		
					Standard	Full.	Lin.	DD	CP/BCD	CL	PS
Po01	—	For manufacturer setting	0000H		—	—	—	—	—	—	—
Po02	*ODI1	MR-D01 input device selection 1	0302H		✔	✔	✔	✔	✔	✔	✔
Po03	*ODI2	MR-D01 input device selection 2	0905H		✔	✔	✔	✔	✔	✔	✔
Po04	*ODI3	MR-D01 input device selection 3	2524H		✔	✔	✔	✔	✔	✔	✔
Po05	*ODI4	MR-D01 input device selection 4	2026H		✔	✔	✔	✔	✔	✔	✔
Po06	*ODI5	MR-D01 input device selection 5	0427H		✔	✔	✔	✔	✔	✔	✔
Po07	*ODI6	MR-D01 input device selection 6	0807H		✔	✔	✔	✔	✔	✔	✔
Po08	*ODO1	MR-D01 output device selection 1	2726H		✔	✔	✔	✔	✔	✔	✔
Po09	*ODO2	MR-D01 output device selection 2	0423H		✔	✔	✔	✔	✔	✔	✔
Po10	*OOP1	Function selection O-1	2001H		✔	✔	✔	✔	✔	✔	✔
Po11	*OOP2	Function selection O-2	0000H		✔	✔	✔	✔	✔	✔	✔
Po12	*OOP3	Function selection O-3	0000H		✔	✔	✔	✔	—	—	—
Po13	*OMOD1	MR-D01 analog monitor 1 output selection	0000H		✔	✔	✔	✔	✔	✔	✔
Po14	*OMOD2	MR-D01 analog monitor 2 output selection	0000H		✔	✔	✔	✔	✔	✔	✔
Po15	OMO1	MR-D01 analog monitor 1 offset	0	mV	✔	✔	✔	✔	✔	✔	✔
Po16	OMO2	MR-D01 analog monitor 2 offset	0	mV	✔	✔	✔	✔	✔	✔	✔
Po17	—	For manufacturer setting	0000H		—	—	—	—	—	—	—
Po18	—		0000H		—	—	—	—	—	—	—
Po19	—		0000H		—	—	—	—	—	—	—
Po20	—		0000H		—	—	—	—	—	—	—
Po21	OVCO	MR-D01 override offset	0	mV	✔	✔	✔	✔	✔	✔	✔
Po22	OTLO	MR-D01 override offset	0	mV	✔	✔	✔	✔	✔	✔	✔
Po23	—	For manufacturer setting	0000H		—	—	—	—	—	—	—
Po24	—		0000H		—	—	—	—	—	—	—
Po25	—		0000H		—	—	—	—	—	—	—
Po26	—		0000H		—	—	—	—	—	—	—
Po27	*ODI7	MR-D01 input device selection 7	2D2CH		—	—	—	—	—	—	—
Po28	*ODI8	MR-D01 input device selection 8	002EH		—	—	—	—	—	—	—
Po29	—	For manufacturer setting	0000H		—	—	—	—	—	—	—
Po30	—		0000H		—	—	—	—	—	—	—
Po31	—		0000H		—	—	—	—	—	—	—
Po32	—		0000H		—	—	—	—	—	—	—

Tab. A-18: *List of option setting parameters for MR-J4-A-RJ*

A.2.10 Positioning control parameters (PT□□)

No.	Symbol	Name	Initial value	Unit	Operation mode				Control mode		
					Standard	Full.	Lin.	DD	CP/BCD	CL	PS
PT01	*CTY	Command mode selection	0000H	—	✔	✔	✔	✔	✔	✔	✔
PT02	*TOP1	Function selection T-1	0000H	—	✔	✔	✔	✔	✔	✔	✔
PT03	*FTY	Feeding function selection	0000H	—	✔	✔	✔	✔	✔	✔	✔
PT04	*ZTY	Home position return type	0010H	—	✔	✔	✔	✔	✔	✔	✔
PT05	ZRF	Home position return speed	100	1/min mm/s	✔	✔	✔	✔	✔	✔	✔
PT06	CRF	Creep speed	10	1/min mm/s	✔	✔	✔	✔	✔	✔	✔
PT07	ZST	Home position shift distance	0	µm 10^{-4} inch 10^{-3} degree pulse	✔	✔	✔	✔	✔	✔	✔
PT08	*ZPS	Home position return position data	0	10^{STM} µm $10^{(STM-4)}$ inch 10^{-3} degree pulse	✔	✔	✔	✔	✔	✔	—
PT09	DCT	Travel distance after proximity dog	1000	10^{STM} µm $10^{(STM-4)}$ inch 10^{-3} degree pulse	✔	✔	✔	✔	✔	✔	—
PT10	ZTM	Stopper type home position return stopper time	100	ms	✔	✔	✔	✔	✔	✔	—
PT11	ZTT	Stopper type home position return torque limit value	15.0	%	✔	✔	✔	✔	✔	✔	—
PT12	CRP	Rough match output range	0	10^{STM} µm $10^{(STM-4)}$ inch 10^{-3} degree pulse	✔	✔	✔	✔	✔	✔	✔
PT13	JOG	JOG operation	100	1/min mm/s	✔	✔	✔	✔	✔	✔	✔
PT14	*BKC	Backlash compensation	0	pulse	✔	✔	✔	✔	✔	✔	✔
PT15	LMPL	Software limit +	0	10^{STM} µm $10^{(STM-4)}$ inch 10^{-3} degree pulse	✔	✔	✔	✔	✔	✔	—
PT16	LMPH										
PT17	LMNL	Software limit –	0	10^{STM} µm $10^{(STM-4)}$ inch 10^{-3} degree pulse	✔	✔	✔	✔	✔	✔	—
PT18	LMNH										
PT19	*LPPL	Position range output address +	0	10^{STM} µm $10^{(STM-4)}$ inch 10^{-3} degree pulse	✔	✔	✔	✔	✔	✔	—
PT20	*LPPH										
PT21	*LNPL	Position range output address –	0	10^{STM} µm $10^{(STM-4)}$ inch 10^{-3} degree pulse	✔	✔	✔	✔	✔	✔	—
PT22	*LNPH										
PT23	OUT1	OUT1 output setting time	0	ms	✔	✔	✔	✔	—	✔	—
PT24	OUT2	OUT2 output setting time	0	ms	✔	✔	✔	✔	—	✔	—
PT25	OUT3	OUT3 output setting time	0	ms	✔	✔	✔	✔	—	✔	—
PT26	*TOP2	Function selection T-2	0000H	—	✔	✔	✔	✔	✔	✔	—

Tab. A-19: *List of positioning control parameters for MR-J4-A-RJ (1)*

No.	Symbol	Name	Initial value	Unit	Operation mode				Control mode		
					Standard	Full.	Lin.	DD	CP/BCD	CL	PS
PT27	*ODM	Operation mode selection	0000H	—	✔	—	—	✔	—	—	✔
PT28	*STN	Number of stations per rotation	8	stations	✔	—	—	✔	—	—	✔
PT29	*TOP3	Function selection T-3	0000H	—	✔	✔	✔	✔	✔	✔	✔
PT30	MSTL	Mark sensor stop travel distance	0	10^{STM} µm $10^{(STM-4)}$ inch	✔	✔	✔	✔	✔	✔	—
PT31	MSTH		0	10^{-3} degree pulse	✔	✔	✔	✔	✔	✔	—
PT32	—	For manufacturer setting	0000H	—	—	—	—	—	—	—	—
PT33	—		0000H	—	—	—	—	—	—	—	—
PT34	*PDEF	Point table/program default	0000H	—	✔	✔	✔	✔	✔	✔	—
PT35	*TOP5	Function selection T-5	0000H	—	✔	✔	✔	✔	✔	✔	—
PT36	—	For manufacturer setting	0000H	—	—	—	—	—	—	—	—
PT37	—		10	—	—	—	—	—	—	—	—
PT38	*TOP7	Function selection T-7	0000H	—	✔	—	—	✔	—	—	✔
PT39	INT	Torque limit delay time	100	ms	✔	—	—	✔	—	—	✔
PT40	*SZS	Station home position shift distance	0	pulse	✔	—	—	✔	—	—	✔
PT41	ORP	Home position return inhibit function selection	0000H		✔	✔	✔	✔	✔	✔	✔
PT42	*OVM	Digital override minimum multiplication	0	%	✔	—	—	✔	—	—	✔
PT43	*OVS	Digital override pitch width	0	%	✔	—	—	✔	—	—	✔
PT44	—	For manufacturer setting	0000H	—	—	—	—	—	—	—	—
PT45	*CZTY	Home position return type 2	0000H	—	—	—	—	—	✔	✔	—
PT46	—	For manufacturer setting	0000H	—	—	—	—	—	—	—	—
PT47	—		0000H	—	—	—	—	—	—	—	—
PT48	—		0000H	—	—	—	—	—	—	—	—

Tab. A-19: *List of positioning control parameters for MR-J4-A-RJ (2)*

NOTES

The following parameter is used for Modbus®/RTU communication. For details, refer to "MR-J4-A-RJ Servo Amplifier Instruction Manual (Modbus®/RTU communication)"

– Pr. PT45 (Home position return type 2)

Using the Modbus®/RTU communication function prevents the RS-422/RS-485 communication function (Mitsubishi general-purpose AC servo protocol) from being used, and vice versa. They cannot be used together.

NOTES

To enable a parameter whose symbol is preceded by *, cycle the power after setting it.

Abbreviations of operation modes indicate the followings.

- Standard: Standard (semi closed loop system) use of the rotary servo motor
- Full.: Fully closed loop system use of the rotary servo motor
- Lin.: Linear servo motor use
- DD: Direct drive (DD) motor use

For MR-J4-03A6-RJ servo amplifiers, the operation mode is available only in standard (semi closed loop system).

The symbols in the control mode column mean as follows.

- CP: Positioning mode (point table method)
- BCD: Positioning mode (point table method in the BCD input positioning operation)
  This method is available only when the MR-D01 unit is connected.
  Refer to the instruction manual (positioning mode) for details.
- CL: Positioning mode (program method)
- PS: Positioning mode (indexer method)

Setting a value out of the setting range in each parameter will trigger AL. 37 (Parameter error).

NOTES

The following parameters are not available with MR-J4-03A6-RJ servo amplifiers.

- Pr. PA02 (Regenerative option)
- Pr. PA17 (Servo motor series setting)
- Pr. PA18 (Servo motor type setting)
- Pr. PA26 (Function selection A-5)
- Pr. PC44 (Function selection C-9)
- Pr. PC45 (Function selection C-A)
- Pr. PD47 (Output device selection 7)
- Pr. PE03 (Fully closed loop function selection 2)
- Pr. PE04 (Fully closed loop control - Feedback pulse electronic gear 1 -Numerator)
- Pr. PE05 (Fully closed loop control - Feedback pulse electronic gear 1 -Denominator)
- Pr. PE06 (Fully closed loop control - Speed deviation error detection level)
- Pr. PE07 (Fully closed loop control - Position deviation error detection level)
- Pr. PE08 (Fully closed loop dual feedback filter)
- Pr. PE10 (Fully closed loop function selection 3)
- Pr. PE34 (Fully closed loop control - Feedback pulse electronic gear 2 -Numerator)
- Pr. PE35 (Fully closed loop control - Feedback pulse electronic gear 2 -Denominator)
- Pr. PF25 (SEMI-F47 function - Instantaneous power failure detection time)
- Pr. PF34 (RS-422 communication function selection 3)

Linear servo motor/DD motor setting parameters (Pr. PL□□) cannot be used with MR-J4-03A6-RJ servo amplifiers.

A.3 Additional information about the series MR-J4-B(-RJ)

A.3.1 Status display

Display	Status	Description
1 ⋮ 5	Initializing	System check in progress
Ab	Initializing	• Power of the servo amplifier was switched on at the condition that the power of the servo system controller is off. • The control axis No. set to the auxiliary axis number setting switches (SW2-3 and SW2-4) and the axis selection rotary switch (SW1) do not match the one set to the servo system controller. • A servo amplifier malfunctioned, or communication error occurred with the servo system controller or the previous axis servo amplifier. In this case, the indication changes as follows: "Ab", "AC", "Ad", and "Ab" • The servo system controller is malfunctioning.
Ab.	Initializing	During initial setting for communication specifications
AC	Initializing	Initial setting for communication specifications completed, and then it synchronized with servo system controller.
Ad	Initializing	During initial parameter setting communication with servo system controller
AE	Initializing	During the servo motor/encoder information and telecommunication with servo system controller
AF	Initializing	During initial signal data communication with servo system controller
AH	Initializing completion	The process for initial data communication with the servo system controller is completed.
AA	Initializing standby	The power supply of servo system controller is turned off during the power supply of servo amplifier is on.
b## ①	Ready-off	The ready-off signal from the servo system controller was received.
d## ①	Servo-on	The ready-off signal from the servo system controller was received.
C## ①	Servo-off	The ready-off signal from the servo system controller was received.
*** ②	Alarm and warning	The alarm No. and the warning No. that occurred is displayed. ④
888	CPU error	CPU watchdog error has occurred.
b##. ① d##. C##.	Test operation mode ③	JOG operation, positioning operation, program operation, output signal (DO) forced output, or motor-less operation was set.

Tab. A-20: *Indication list of MR-J4-B(-RJ)*

① The meanings of ## are listed below.

##	Description
01	Axis No. 1
≀	≀
64	Axis No. 64

② ** indicates the alarm No. and the warning No.

③ Requires the MR Configurator2.

④ Only a list of alarms and warnings is listed in section 8.2. Refer to "MELSERVO J4 Servo Amplifier Instruction Manual (Troubleshooting)" for details of alarms and warnings.

A.3.2 Basic setting parameters (PA□□)

No.	Symbol	Name	Initial value	Unit	Operation mode			
					Standard	Full.	Lin.	DD
PA01	**STY	Operation mode	1000H	—	✔	✔	✔	✔
PA02	**REG	Regenerative option	0000H	—	✔	✔	✔	✔
PA03	*ABS	Absolute position detection system	0000H	—	✔	✔	✔	✔
PA04	*AOP1	Function selection A-1	2000H	—	✔	✔	✔	✔
PA05	—	For manufacturer setting	10000	—	—	—	—	—
PA06	—		1	—	—	—	—	—
PA07	—		1	—	—	—	—	—
PA08	ATU	Auto tuning mode	0001H	—	✔	✔	✔	✔
PA09	RSP	Auto tuning response	16	—	✔	✔	✔	✔
PA10	INP	In-position range	1600	pulse	✔	✔	✔	✔
PA11	—	For manufacturer setting	1000.0	—	—	—	—	—
PA12	—		1000.0	—	—	—	—	—
PA13	—		0000H	—	—	—	—	—
PA14	*POL	Rotation direction selection/travel direction selection	0	—	✔	✔	✔	✔
PA15	*ENR	Encoder output pulses	4000	pulse/rev	✔	✔	✔	✔
PA16	*ENR2	Encoder output pulses 2	1	—	✔	✔	✔	✔
PA17	**MSR	Servo motor series setting	0000H	—	—	—	✔	—
PA18	**MTY	Servo motor type setting	0000H	—	—	—	✔	—
PA19	*BLK	Parameter writing inhibit	00ABH	—	✔	✔	✔	✔
PA20	*TDS	Tough drive setting	0000H	—	✔	✔	✔	✔
PA21	*AOP3	Function selection A-3	0001H	—	✔	✔	✔	✔
PA22	**PCS	Position control composition selection	0000H	—	✔	—	—	—
PA23	DRAT	Drive recorder arbitrary alarm trigger setting	0000H	—	✔	✔	✔	✔
PA24	AOP4	Function selection A-4	0000H	—	✔	✔	✔	✔
PA25	OTHOV	One-touch tuning – Overshoot permissible level	0	%	✔	✔	✔	✔
PA26	*AOP5	Function selection A-5	0000H	—	✔	✔	✔	✔
PA27	—	For manufacturer setting	0000H	—	—	—	—	—
PA28	—		0000H	—	—	—	—	—
PA29	—		0000H	—	—	—	—	—
PA30	—		0000H	—	—	—	—	—
PA31	—		0000H	—	—	—	—	—
PA32	—		0000H	—	—	—	—	—

Tab. A-21: *List of basic setting parameters for MR-J4-B(-RJ)*

A.3.3 Gain/filter setting parameters (PB□□)

No.	Symbol	Name	Initial value	Unit	Operation mode			
					Standard	Full.	Lin.	DD
PB01	FILT	Adaptive tuning mode (adaptive filter II)	0000H	—	✔	✔	✔	✔
PB02	VRFT	Vibration suppression control tuning mode (advanced vibration suppression control II)	0000H	—	✔	✔	✔	✔
PB03	TFBGN	Torque feedback loop gain	18000	rad/s	✔	✔	✔	✔
PB04	FFC	Feed forward gain	0	%	✔	✔	✔	✔
PB05	—	For manufacturer setting	500	—	—	—	—	—
PB06	GD2	Load to motor inertia ratio/load to motor mass ratio	7.00	Multiplier	✔	✔	✔	✔
PB07	PG1	Model loop gain	15.0	rad/s	✔	✔	✔	✔
PB08	PG2	Position loop gain	37.0	rad/s	✔	✔	✔	✔
PB09	VG2	Speed loop gain	823	rad/s	✔	✔	✔	✔
PB10	VIC	Speed integral compensation	33.7	ms	✔	✔	✔	✔
PB11	VDC	Speed differential compensation	980	—	✔	✔	✔	✔
PB12	OVA	Overshoot amount compensation	0	%	✔	✔	✔	✔
PB13	NH1	Machine resonance suppression filter 1	4500	Hz	✔	✔	✔	✔
PB14	NHQ1	Notch shape selection 1	0000h	—	✔	✔	✔	✔
PB15	NH2	Machine resonance suppression filter 2	4500	Hz	✔	✔	✔	✔
PB16	NHQ2	Notch shape selection 2	0000H	—	✔	✔	✔	✔
PB17	NHF	Shaft resonance suppression filter	0000H	—	✔	✔	✔	✔
PB18	LPF	Low-pass filter setting	3141	rad/s	✔	✔	✔	✔
PB19	VRF11	Vibration suppression control 1 - Vibration frequency	100.0	Hz	✔	✔	✔	✔
PB20	VRF12	Vibration suppression control 1 - Resonance frequency	100.0	Hz	✔	✔	✔	✔
PB21	VRF13	Vibration suppression control 1 - Vibration frequency damping	0.00	—	✔	✔	✔	✔
PB22	VRF14	Vibration suppression control 1 - Resonance frequency damping	0.00	—	✔	✔	✔	✔
PB23	VFBF	Low-pass filter selection	0000H	—	✔	✔	✔	✔
PB24	*MVS	Slight vibration suppression control	0000H	—	✔	✔	✔	✔
PB25	*BOP1	Function selection B-1	0000H	—	✔	✔	✔	✔
PB26	*CDP	Gain switching function	0000H	—	✔	✔	✔	✔
PB27	CDL	Gain switching condition	10	kpulse/s pulse 1/min	✔	✔	✔	✔
PB28	CDT	Gain switching time constant	1	ms	✔	✔	✔	✔
PB29	GD2B	Load to motor inertia ratio/load to motor mass ratio after gain switching	7.00	Multiplier	✔	✔	✔	✔
PB30	PG2B	Position loop gain after gain switching	0.0	rad/s	✔	✔	✔	✔
PB31	VG2B	Speed loop gain after gain switching	0	rad/s	✔	✔	✔	✔
PB32	VICB	Speed integral compensation after gain switching	0.0	ms	✔	✔	✔	✔
PB33	VRF11B	Vibration suppression control 1 - Vibration frequency after gain switching	0.0	Hz	✔	✔	✔	✔
PB34	VRF12B	Vibration suppression control 1 - Resonance frequency after gain switching	0.0	Hz	✔	✔	✔	✔
PB35	VRF13B	Vibration suppression control 1 - Vibration frequency damping after gain switching	0.00	—	✔	✔	✔	✔
PB36	VRF14B	Vibration suppression control 1 - Resonance frequency damping after gain switching	0.00	—	✔	✔	✔	✔
PB37	—	For manufacturer setting	1600	—	—	—	—	—
PB38	—		0.00	—	—	—	—	—
PB39	—		0.00	—	—	—	—	—
PB40	—		0.00	—	—	—	—	—

Tab. A-22: *List of gain/filter setting parameters for MR-J4-B(-RJ) (1)*

No.	Symbol	Name	Initial value	Unit	Operation mode			
					Standard	Full.	Lin.	DD
PB41	—	For manufacturer setting	0	—	—	—	—	—
PB42	—		0	—	—	—	—	—
PB43	—		0000H	—	—	—	—	—
PB44	—		0.00	—	—	—	—	—
PB45	CNHF	Command notch filter	0000H	—	✔	✔	✔	✔
PB46	NH3	Machine resonance suppression filter 3	4500	Hz	✔	✔	✔	✔
PB47	NHQ3	Notch shape selection 3	0000H	—	✔	✔	✔	✔
PB48	NH4	Machine resonance suppression filter 4	4500	Hz	✔	✔	✔	✔
PB49	NHQ4	Notch shape selection 4	0000H	—	✔	✔	✔	✔
PB50	NH5	Machine resonance suppression filter 5	4500	Hz	✔	✔	✔	✔
PB51	NHQ5	Notch shape selection 5	0000H	—	✔	✔	✔	✔
PB52	VRF21	Vibration suppression control 2 - Vibration frequency	100.0	Hz	✔	✔	✔	✔
PB53	VRF22	Vibration suppression control 2 - Resonance frequency	100.0	Hz	✔	✔	✔	✔
PB54	VRF23	Vibration suppression control 2 - Vibration frequency damping	0.00	—	✔	✔	✔	✔
PB55	VRF24	Vibration suppression control 2 - Resonance frequency damping	0.00	—	✔	✔	✔	✔
PB56	VRF21B	Vibration suppression control 2 - Vibration frequency after gain switching	0.0	Hz	✔	✔	✔	✔
PB57	VRF22B	Vibration suppression control 2 - Resonance frequency after gain switching	0.0	Hz	✔	✔	✔	✔
PB58	VRF23B	Vibration suppression control 2 - Vibration frequency damping after gain switching	0.00		✔	✔	✔	✔
PB59	VRF24B	Vibration suppression control 2 - Resonance frequency damping after gain switching	0.00	—	✔	✔	✔	✔
PB60	PG1B	Model loop gain after gain switching	0.0	rad/s	✔	✔	✔	✔
PB61	—	For manufacturer setting	0.0	—	—	—	—	—
PB62	—		0000H	—	—	—	—	—
PB63	—		0000H	—	—	—	—	—
PB64	—		0000H	—	—	—	—	—

Tab. A-22: *List of gain/filter setting parameters for MR-J4-B(-RJ) (2)*

A.3.4 Extension setting parameters (PC□□)

No.	Symbol	Name	Initial value	Unit	Operation mode			
					Standard	Full.	Lin.	DD
PC01	ERZ	Error excessive alarm level	0	rev mm	✔	✔	✔	✔
PC02	MBR	Electromagnetic brake sequence output	0	ms	✔	✔	✔	✔
PC03	*ENRS	Encoder output pulse selection	0000H	—	✔	✔	✔	✔
PC04	**COP1	Function selection C-1	0000H	—	✔	✔	✔	✔
PC05	**COP2	Function selection C-2	0000H	—	✔	—	—	—
PC06	*COP3	Function selection C-3	0000H	—	✔	✔	✔	✔
PC07	ZSP	Zero speed	50	1/min mm/s	✔	✔	✔	✔
PC08	OSL	Overspeed alarm detection level	0	1/min mm/s	✔	✔	✔	✔
PC09	MOD1	Analog monitor 1 output	0000H	—	✔	✔	✔	✔
PC10	MOD2	Analog monitor 2 output	0000H	—	✔	✔	✔	✔
PC11	MO1	Analog monitor 1 offset	0	mV	✔	✔	✔	✔
PC12	MO2	Analog monitor 2 offset	0	mV	✔	✔	✔	✔
PC13	MOSDL	Analog monitor - Feedback position output standard data - Low	0	pulse	✔	✔	✔	✔
PC14	MOSDH	Analog monitor - Feedback position output standard data - High	0	10^3 pulses	✔	✔	✔	✔
PC15	—	For manufacturer setting	0	—	—	—	—	—
PC16	—		0000H	—	—	—	—	—
PC17	**COP4	Function selection C-4	0000H	—	✔	✔	✔	✔
PC18	*COP5	Function selection C-5	0000H	—	✔	✔	✔	✔
PC19	—	For manufacturer setting	0000H	—	—	—	—	—
PC20	*COP7	Function selection C-7	0000H	—	✔	✔	✔	✔
PC21	*BPS	Alarm history clear	0000H	—	✔	✔	✔	✔
PC22	—	For manufacturer setting	0	—	—	—	—	—
PC23	—		0000H	—	—	—	—	—
PC24	RSBR	Forced stop deceleration time constant	100	ms	✔	✔	✔	✔
PC25	—	For manufacturer setting	0	—	—	—	—	—
PC26	**COP8	Function selection C-8	0000H	—	✔① ①	✔	✔	✔
PC27	**COP9	Function selection C-9	0000H	—	✔① ①	✔	✔	—
PC28	—	For manufacturer setting	0000H	—	—	—	—	—
PC29	*COPB	Function selection C-B	0000H	—	✔	—	✔	✔
PC30	—	For manufacturer setting	0	—	—	—	—	—
PC31	RSUP1	Vertical axis freefall prevention compensation amount	0	0.0001rev 0.01mm	✔	✔	✔	✔
PC32	—	For manufacturer setting	0000H	—	—	—	—	—
PC33	—		0	—	—	—	—	—
PC34	—		100	—	—	—	—	—
PC35	—		0000H	—	—	—	—	—
PC36	—		0000H	—	—	—	—	—
PC37	—		0000H	—	—	—	—	—

Tab. A-23: *List of extension setting parameters for MR-J4-B(-RJ) (1)*

No.	Symbol	Name	Initial value	Unit	Operation mode			
					Standard	Full.	Lin.	DD
PC38	ERW	Error excessive warning level	0	rev mm	✔	✔	✔	✔
PC39	—	For manufacturer setting	0000H	—	—	—	—	—
PC40	—		0000H	—	—	—	—	—
PC41	—		0000H	—	—	—	—	—
PC42	—		0000H	—	—	—	—	—
PC43	—		0000H	—	—	—	—	—
PC44	—		0000H	—	—	—	—	—
PC45	—		0000H	—	—	—	—	—
PC46	—		0000H	—	—	—	—	—
PC47	—		0000H	—	—	—	—	—
PC48	—		0000H	—	—	—	—	—
PC49	—		0000H	—	—	—	—	—
PC50	—		0000H	—	—	—	—	—
PC51	—		0000H	—	—	—	—	—
PC52	—		0000H	—	—	—	—	—
PC53	—		0000H	—	—	—	—	—
PC54	—		0000H	—	—	—	—	—
PC55	—		0000H	—	—	—	—	—
PC56	—		0000H	—	—	—	—	—
PC57	—		0000H	—	—	—	—	—
PC58	—		0000H	—	—	—	—	—
PC59	—		0000H	—	—	—	—	—
PC60	—		0000H	—	—	—	—	—
PC61	—		0000H	—	—	—	—	—
PC62	—		0000H	—	—	—	—	—
PC63	—		0000H	—	—	—	—	—
PC64	—		0000H	—	—	—	—	—

Tab. A-23: *List of extension setting parameters for MR-J4-B(-RJ) (2)*

① It is available when the scale measurement function is enabled (PA22 is "1□□□" or "2□□□").

A.3.5 I/O setting parameters (PD□□)

No.	Symbol	Name	Initial value	Unit	Operation mode			
					Standard	Full.	Lin.	DD
PD01	—	For manufacturer setting	0000H	—	—	—	—	—
PD02	*DIA2	Input signal automatic on selection 2	0000H	—	✔	✔	✔	✔
PD03	—	For manufacturer setting	0020H	—	—	—	—	—
PD04	—		0021H	—	—	—	—	—
PD05	—		0022H	—	—	—	—	—
PD06	—		0000H	—	—	—	—	—
PD07	*DO1	Output device selection 1	0005H	—	✔	✔	✔	✔
PD08	*DO2	Output device selection 2	0004H	—	✔	✔	✔	✔
PD09	*DO3	Output device selection 3	0003H	—	✔	✔	✔	✔
PD10	—	For manufacturer setting	0000H	—	—	—	—	—
PD11	*DIF	Input filter setting	0004H	ms	✔	✔	✔	✔
PD12	*DOP1	Function selection D-1	0000H	—	✔	✔	✔	✔
PD13	*DOP2	Function selection D-2	0000H	—	✔	✔	✔	✔
PD14	*DOP3	Function selection D-3	0000H	—	✔	✔	✔	✔
PD15	*IDCS	Driver communication setting	0000H	—	✔	✔	—	—
PD16	*MD1	Driver communication setting - Master - Transmit data selection 1	0000H	—	✔	✔	—	—
PD17	*MD2	Driver communication setting - Master - Transmit data selection 2	0000H	—	✔	✔	—	—
PD18	—	For manufacturer setting	0000H	—	—	—	—	—
PD19	—		0000H	—	—	—	—	—
PD20	*SLA1	Driver communication setting - Slave - Master axis No. selection 1	0	—	✔	—	—	—
PD21	—	For manufacturer setting	0	—	—	—	—	—
PD22	—		0	—	—	—	—	—
PD23	—		0	—	—	—	—	—
PD24	—		0000H	—	—	—	—	—
PD25	—		0000H	—	—	—	—	—
PD26	—		0000H	—	—	—	—	—
PD27	—		0000H	—	—	—	—	—
PD28	—		0000H	—	—	—	—	—
PD29	—		0000H	—	—	—	—	—
PD30	TLC	Master-slave operation - Torque command coefficient on slave	0	—	✔	—	—	—
PD31	VLC	Master-slave operation - Speed limit coefficient on slave	0	—	✔	—	—	—
PD32	VLL	Master-slave operation - Speed limit adjusted value on slave	0	1/min	✔	—	—	—
PD33	—	For manufacturer setting	0000H	—	—	—	—	—
PD34	—		0000H	—	—	—	—	—
PD35	—		0000H	—	—	—	—	—
PD36	—		0000H	—	—	—	—	—
PD37	—		0000H	—	—	—	—	—
PD38	—		0000H	—	—	—	—	—
PD39	—		0000H	—	—	—	—	—
PD40	—		0000H	—	—	—	—	—
PD41	—		0000H	—	—	—	—	—
PD42	—		0000H	—	—	—	—	—

Tab. A-24: *List of I/O setting parameters for MR-J4-B(-RJ) (1)*

No.	Symbol	Name	Initial value	Unit	Operation mode			
					Standard	Full.	Lin.	DD
PD43	—	For manufacturer setting	0000H	—	—	—	—	—
PD44	—		0000H	—	—	—	—	—
PD45	—		0000H	—	—	—	—	—
PD46	—		0000H	—	—	—	—	—
PD47	—		0000H	—	—	—	—	—
PD48	—		0000H	—	—	—	—	—

Tab. A-24: *List of I/O setting parameters for MR-J4-B(-RJ) (2)*

A.3.6 Extension setting 2 parameters (PE□□)

No.	Symbol	Name	Initial value	Unit	Operation mode			
					Standard	Full.	Lin.	DD
PE01	**FCT1	Fully closed loop function selection 1	0000H	—	—	✔	—	—
PE02	—	For manufacturer setting	0000H	—	—	—	—	—
PE03	*FCT2	Fully closed loop function selection 2	0003H	—	—	✔	—	—
PE04	**FBN	Fully closed loop control - Feedback pulse electronic gear 1 - Numerator	1	—	—	✔	—	—
PE05	**FBD	Fully closed loop control - Feedback pulse electronic gear 1 - Denominator	1	—	—	✔	—	—
PE06	BC1	Fully closed loop control - Speed deviation error detection level	400	1/min	—	✔	—	—
PE07	BC2	Fully closed loop control - Position deviation error detection level	100	kpulse	—	✔	—	—
PE08	DUF	Fully closed loop dual feedback filter	10	rad/s	—	✔	—	—
PE09	—	For manufacturer setting	0000H	—	—	—	—	—
PE10	FCT3	Fully closed loop function selection 3	0000H	—	✔	✔	—	—
PE11	—	For manufacturer setting	0000H	—	—	—	—	—
PE12	—		0000H	—	—	—	—	—
PE13	—		0000H	—	—	—	—	—
PE14	—		0111H	—	—	—	—	—
PE15	—		20	—	—	—	—	—
PE16	—		0000H	—	—	—	—	—
PE17	—		0000H	—	—	—	—	—
PE18	—		0000H	—	—	—	—	—
PE19	—		0000H	—	—	—	—	—
PE20	—		0000H	—	—	—	—	—
PE21	—		0000H	—	—	—	—	—
PE22	—		0000H	—	—	—	—	—
PE23	—		0000H	—	—	—	—	—
PE24	—		0000H	—	—	—	—	—
PE25	—		0000H	—	—	—	—	—
PE26	—		0000H	—	—	—	—	—
PE27	—		0000H	—	—	—	—	—
PE28	—		0000H	—	—	—	—	—
PE29	—		0000H	—	—	—	—	—
PE30	—		0000H	—	—	—	—	—
PE31	—		0000H	—	—	—	—	—
PE32	—		0000H	—	—	—	—	—
PE33	—		0000H	—	—	—	—	—
PE34	**FBN2	Fully closed loop control - Feedback pulse electronic gear 2 - Numerator	1	—	—	✔	—	—
PE35	**FBD2	Fully closed loop control - Feedback pulse electronic gear 2 - Denominator	1	—	—	✔	—	—
PE36	—	For manufacturer setting	0.0	—	—	—	—	—
PE37	—		0.00	—	—	—	—	—
PE38	—		0.00	—	—	—	—	—
PE39	—		20	—	—	—	—	—
PE40	—		0000H	—	—	—	—	—
PE41	EOP3	Function selection E-3	0000H	—	✔	✔	✔	✔
PE42	—	For manufacturer setting	0	—	—	—	—	—

Tab. A-25: *List of Extension setting 2 parameters for MR-J4-B(-RJ) (1)*

No.	Symbol	Name	Initial value	Unit	Operation mode			
					Standard	Full.	Lin.	DD
PE43	—	For manufacturer setting	0.0	—	—	—	—	—
PE44	LMCP	Lost motion compensation positive-side compensation value selection	0	0.01%	✔	✔	✔	✔
PE45	LMCN	Lost motion compensation negative-side compensation value selection	0	0.01%	✔	✔	✔	✔
PE46	LMFLT	Lost motion filter setting	0	0.1 ms	✔	✔	✔	✔
PE47	TOF	Torque offset	0	0.01%	✔	✔	—	—
PE48	*LMOP	Lost motion compensation function selection	0000H	—	✔	✔	✔	✔
PE49	LMCD	Lost motion compensation timing	0	0.1 ms	✔	✔	✔	✔
PE50	LMCT	Lost motion compensation non-sensitive band	0	pulse kpulse	✔	✔	✔	✔
PE51	—	For manufacturer setting	0000H	—	—	—	—	—
PE52	—		0000H	—	—	—	—	—
PE53	—		0000H	—	—	—	—	—
PE54	—		0000H	—	—	—	—	—
PE55	—		0000H	—	—	—	—	—
PE56	—		0000H	—	—	—	—	—
PE57	—		0000H	—	—	—	—	—
PE58	—		0000H	—	—	—	—	—
PE59	—		0000H	—	—	—	—	—
PE60	—		0000H	—	—	—	—	—
PE61	—		0.00	—	—	—	—	—
PE62	—		0.00	—	—	—	—	—
PE63	—		0.00	—	—	—	—	—
PE64	—		0.00	—	—	—	—	—

Tab. A-25: *List of Extension setting 2 parameters for MR-J4-B(-RJ) (2)*

A.3.7 Extension setting 3 parameters (PF□□)

No.	Symbol	Name	Initial value	Unit	Operation mode			
					Standard	Full.	Lin.	DD
PF01	—	For manufacturer setting	0000H	—	—	—	—	—
PF02	—		0000H	—	—	—	—	—
PF03	—		0000H	—	—	—	—	—
PF04	—		0	—	—	—	—	—
PF05	—		0000H	—	—	—	—	—
PF06	*FOP5	Function selection F-5	0000H	—	✔	✔	✔	✔
PF07	—	For manufacturer setting	0000H	—	—	—	—	—
PF08	—		0000H	—	—	—	—	—
PF09	—		0	—	—	—	—	—
PF10	—		0	—	—	—	—	—
PF11	—		0	—	—	—	—	—
PF12	DBT	Electronic dynamic brake operating time	2000	ms	✔	✔	✔	✔
PF13	—	For manufacturer setting	0000H	—	—	—	—	—
PF14	—		10	—	—	—	—	—
PF15	—		0000H	—	—	—	—	—
PF16	—		0000H	—	—	—	—	—
PF17	—		0000H	—	—	—	—	—
PF18	**STOD	STO diagnosis error detection time	0	s	✔	✔	✔	✔
PF19	—	For manufacturer setting	0000H	—	—	—	—	—
PF20	—		0000H	—	—	—	—	—
PF21	DRT	Drive recorder switching time setting	0	s	✔	✔	✔	✔
PF22	—	For manufacturer setting	200	—	—	—	—	—
PF23	OSCL1	Vibration tough drive - Oscillation detection level	50	%	✔	✔	✔	✔
PF24	*OSCL2	Vibration tough drive function selection	0000H	—	✔	✔	✔	✔
PF25	CVAT	SEMI-F47 function - Instantaneous power failure detection time	200	ms	✔	✔	✔	✔
PF26	—	For manufacturer setting	0	—	—	—	—	—
PF27	—		0	—	—	—	—	—
PF28	—		0	—	—	—	—	—
PF29	—		0000H	—	—	—	—	—
PF30	—		0	—	—	—	—	—
PF31	FRIC	Machine diagnosis function - Friction judgement speed	0	1/min mm/s	✔	✔	✔	✔
PF32	—	For manufacturer setting	50	—	—	—	—	—
PF33	—		0000H	—	—	—	—	—
PF34	—		0000H	—	—	—	—	—
PF35	—		0000H	—	—	—	—	—
PF36	—		0000H	—	—	—	—	—
PF37	—		0000H	—	—	—	—	—
PF38	—		0000H	—	—	—	—	—
PF39	—		0000H	—	—	—	—	—
PF40	—		0000H	—	—	—	—	—
PF41	—		0000H	—	—	—	—	—

Tab. A-26: *List of Extension setting 3 parameters for MR-J4-B(-RJ) (1)*

No.	Symbol	Name	Initial value	Unit	Operation mode			
					Standard	Full.	Lin.	DD
PF42	—	For manufacturer setting	0000H	—	—	—	—	—
PF43	—		0000H	—	—	—	—	—
PF44	—		0	—	—	—	—	—
PF45	—		0000H	—	—	—	—	—
PF46	—		0000H	—	—	—	—	—
PF47	—		0000H	—	—	—	—	—
PF48	—		0000H	—	—	—	—	—

Tab. A-26: *List of Extension setting 3 parameters for MR-J4-B(-RJ) (2)*

A.3.8 Linear servo motor/DD motor setting parameters (PL□□)

No.	Symbol	Name	Initial value	Unit	Operation mode			
					Standard	Full.	Lin.	DD
PL01	**LIT1	Linear servo motor/DD motor function selection 1	0301H	—	—	—	✔	✔
PL02	**LIM	Linear encoder resolution - Numerator	1000	µm	—	—	✔	—
PL03	**LID	Linear encoder resolution - Denominator	1000	µm	—	—	✔	—
PL04	*LIT2	Linear servo motor/DD motor function selection 2	0003H	—	—	—	✔	✔
PL05	LB1	Position deviation error detection level	0	mm 0.01 rev	—	—	✔	✔
PL06	LB2	Speed deviation error detection level	0	mm/s 1/min	—	—	✔	✔
PL07	LB3	Torque/thrust deviation error detection level	100	%	—	—	✔	✔
PL08	*LIT3	Linear servo motor/DD motor function selection 3	0010H	—	—	—	✔	✔
PL09	LPWM	Magnetic pole detection voltage level	30	%	—	—	✔	✔
PL10	—	For manufacturer setting	5	—	—	—	—	—
PL11	—		100	—	—	—	—	—
PL12	—		500	—	—	—	—	—
PL13	—		0000H	—	—	—	—	—
PL14	—		0	—	—	—	—	—
PL15	—		20	—	—	—	—	—
PL16	—		0	—	—	—	—	—
PL17	LTSTS	Magnetic pole detection - Minute position detection method - Function selection	0000H	—	—	—	✔	✔
PL18	IDLV	Magnetic pole detection - Minute position detection method - Identification signal amplitude	0	%	—	—	✔	✔
PL19	—	For manufacturer setting	0	—	—	—	—	—
PL20	—		0	—	—	—	—	—
PL21	—		0	—	—	—	—	—
PL22	—		0	—	—	—	—	—
PL23	—		0000H	—	—	—	—	—
PL24	—		0	—	—	—	—	—
PL25	—		0000H	—	—	—	—	—
PL26	—		0000H	—	—	—	—	—
PL27	—		0000H	—	—	—	—	—
PL28	—		0000H	—	—	—	—	—
PL29	—		0000H	—	—	—	—	—
PL30	—		0000H	—	—	—	—	—
PL31	—		0000H	—	—	—	—	—
PL32	—		0000H	—	—	—	—	—
PL33	—		0000H	—	—	—	—	—
PL34	—		0000H	—	—	—	—	—
PL35	—		0000H	—	—	—	—	—
PL36	—		0000H	—	—	—	—	—
PL37	—		0000H	—	—	—	—	—
PL38	—		0000H	—	—	—	—	—
PL39	—		0000H	—	—	—	—	—
PL40	—		0000H	—	—	—	—	—

Tab. A-27: *List of linear servo motor/DD motor setting parameters for MR-J4-B(-RJ) (1)*

No.	Symbol	Name	Initial value	Unit	Operation mode			
					Standard	Full.	Lin.	DD
PL41	—	For manufacturer setting	0000H	—	—	—	—	—
PL42	—		0000H	—	—	—	—	—
PL43	—		0000H	—	—	—	—	—
PL44	—		0000H	—	—	—	—	—
PL45	—		0000H	—	—	—	—	—
PL46	—		0000H	—	—	—	—	—
PL47	—		0000H	—	—	—	—	—
PL48	—		0000H	—	—	—	—	—

Tab. A-27: *List of linear servo motor/DD motor setting parameters for MR-J4-B(-RJ) (2)*

NOTES

The parameter whose symbol is preceded by * is enabled with the following conditions:

- *: After setting the parameter, cycle the power or reset the controller.
- **: After setting the parameter, cycle the power.

Abbreviations of operation modes indicate the followings.

- Standard: Standard (semi closed loop system) use of the rotary servo motor
- Full.: Fully closed loop system use of the rotary servo motor
- Lin.: Linear servo motor use
- DD: Direct drive (DD) motor use

For servo amplifier with software version B3 or later, the parameter initial values for the manufacturer setting are partially changed.

A.4 Additional information about the series MR-J4W-B

A.4.1 Status display

Display	Status	Description
1 ⋮ 5	Initializing	System check in progress
Ab	Initializing	• Power of the servo amplifier was switched on at the condition that the power of the servo system controller is off. • The control axis No. set to the auxiliary axis number setting switches (SW2-5 and SW2-6) and the axis selection rotary switch (SW1) do not match the one set to the servo system controller. • A servo amplifier malfunctioned, or communication error occurred with the servo system controller or the previous axis servo amplifier. In this case, the indication changes as follows: "Ab", "AC", "Ad", and "Ab" • The servo system controller is malfunctioning.
Ab.	Initializing	During initial setting for communication specifications
AC	Initializing	Initial setting for communication specifications completed, and then it synchronized with servo system controller.
Ad	Initializing	During initial parameter setting communication with servo system controller
AE	Initializing	During the servo motor/encoder information and telecommunication with servo system controller
AF	Initializing	During initial signal data communication with servo system controller
AH	Initializing completion	The process for initial data communication with the servo system controller is completed.
AA	Initializing standby	The power supply of servo system controller is turned off during the power supply of servo amplifier is on.
b## ①	Ready-off	The ready-off signal from the servo system controller was received.
d## ①	Servo-on	The ready-off signal from the servo system controller was received.
C## ①	Servo-off	The ready-off signal from the servo system controller was received.
*** ②	Alarm and warning	The alarm No. and the warning No. that occurred is displayed. ④
888	CPU error	CPU watchdog error has occurred.
b#. d#. C#. ①	Test operation mode ③	JOG operation, positioning operation, program operation, output signal (DO) forced output, or motor-less operation was set.

Tab. A-28: *Indication list of MR-J4W-B*

① The meanings of ## are listed below.

##	Description
01	Axis No. 1
≀	≀
64	Axis No. 64

② *** indicates the alarm No. and the warning No. "A" in the third digit indicates the A-axis, "B" indicates the B-axis, and "C" indicates the C-axis.

③ Only a list of alarms and warnings is listed in section 8.3. Refer to "MELSERVO J4 Servo Amplifier Instruction Manual (Troubleshooting)" for details of alarms and warnings.

A.4.2 Basic setting parameters (PA□□)

No.	Symbol	Name	Initial value	Unit	Each/ Common	Operation mode			
						Standard	Full.	Lin.	DD
PA01	**STY	Operation mode	1000H	—	Each	✔	✔	✔	✔
PA02	**REG	Regenerative option	0000H	—	Common	✔	✔	✔	✔
PA03	*ABS	Absolute position detection system	0000H	—	Each	✔	✔	✔	✔
PA04	*AOP1	Function selection A-1	2000H	—	Common	✔	✔	✔	✔
PA05	—	For manufacturer setting	10000	—	—	—	—	—	—
PA06	—		1	—	—	—	—	—	—
PA07	—		1	—	—	—	—	—	—
PA08	ATU	Auto tuning mode	0001H	—	Each	✔	✔	✔	✔
PA09	RSP	Auto tuning response	16	—	Each	✔	✔	✔	✔
PA10	INP	In-position range	1600	pulse	Each	✔	✔	✔	✔
PA11	—	For manufacturer setting	1000.0	—	—	—	—	—	—
PA12	—		1000.0	—	—	—	—	—	—
PA13	—		0000H	—	—	—	—	—	—
PA14	*POL	Rotation direction selection/travel direction selection	0	—	Each	✔	✔	✔	✔
PA15	*ENR	Encoder output pulses	4000	pulse/rev	Each	✔	✔	✔	✔
PA16	*ENR2	Encoder output pulses 2	1	—	Each	✔	✔	✔	✔
PA17	**MSR	Servo motor series setting	0000H	—	Each	—	—	✔	—
PA18	**MTY	Servo motor type setting	0000H	—	Each	—	—	✔	—
PA19	*BLK	Parameter writing inhibit	00ABH	—	Each	✔	✔	✔	✔
PA20	*TDS	Tough drive setting	0000H	—	Each	✔	✔	✔	✔
PA21	*AOP3	Function selection A-3	0001H	—	Each	✔	✔	✔	✔
PA22	**PCS	Position control composition selection	0000H	—	Each	✔	—	—	—
PA23	DRAT	Drive recorder arbitrary alarm trigger setting	0000H	—	Each	✔	✔	✔	✔
PA24	AOP4	Function selection A-4	0000H	—	Each	✔	✔	✔	✔
PA25	OTHOV	One-touch tuning – Overshoot permissible level	0	%	Each	✔	✔	✔	✔
PA26	—	For manufacturer setting	0000H	—	—	—	—	—	—
PA27	—		0000H	—	—	—	—	—	—
PA28	—		0000H	—	—	—	—	—	—
PA29	—		0000H	—	—	—	—	—	—
PA30	—		0000H	—	—	—	—	—	—
PA31	—		0000H	—	—	—	—	—	—
PA32	—		0000H	—	—	—	—	—	—

Tab. A-29: *List of basic setting parameters for MR-J4W-B*

A.4.3 Gain/filter setting parameters (PB□□)

No.	Symbol	Name	Initial value	Unit	Each/ Common	Operation mode			
						Standard	Full.	Lin.	DD
PB01	FILT	Adaptive tuning mode (adaptive filter II)	0000H	—	Each	✔	✔	✔	✔
PB02	VRFT	Vibration suppression control tuning mode (advanced vibration suppression control II)	0000H	—	Each	✔	✔	✔	✔
PB03	TFBGN	Torque feedback loop gain	18000	rad/s	Each	✔	✔	✔	✔
PB04	FFC	Feed forward gain	0	%	Each	✔	✔	✔	✔
PB05	—	For manufacturer setting	500	—	—	—	—	—	—
PB06	GD2	Load to motor inertia ratio/load to motor mass ratio	7.00	Multiplier	Each	✔	✔	✔	✔
PB07	PG1	Model loop gain	15.0	rad/s	Each	✔	✔	✔	✔
PB08	PG2	Position loop gain	37.0	rad/s	Each	✔	✔	✔	✔
PB09	VG2	Speed loop gain	823	rad/s	Each	✔	✔	✔	✔
PB10	VIC	Speed integral compensation	33.7	ms	Each	✔	✔	✔	✔
PB11	VDC	Speed differential compensation	980	—	Each	✔	✔	✔	✔
PB12	OVA	Overshoot amount compensation	0	%	Each	✔	✔	✔	✔
PB13	NH1	Machine resonance suppression filter 1	4500	Hz	Each	✔	✔	✔	✔
PB14	NHQ1	Notch shape selection 1	0000h	—	Each	✔	✔	✔	✔
PB15	NH2	Machine resonance suppression filter 2	4500	Hz	Each	✔	✔	✔	✔
PB16	NHQ2	Notch shape selection 2	0000H	—	Each	✔	✔	✔	✔
PB17	NHF	Shaft resonance suppression filter	0000H	—	Each	✔	✔	✔	✔
PB18	LPF	Low-pass filter setting	3141	rad/s	Each	✔	✔	✔	✔
PB19	VRF11	Vibration suppression control 1 - Vibration frequency	100.0	Hz	Each	✔	✔	✔	✔
PB20	VRF12	Vibration suppression control 1 - Resonance frequency	100.0	Hz	Each	✔	✔	✔	✔
PB21	VRF13	Vibration suppression control 1 - Vibration frequency damping	0.00	—	Each	✔	✔	✔	✔
PB22	VRF14	Vibration suppression control 1 - Resonance frequency damping	0.00	—	Each	✔	✔	✔	✔
PB23	VFBF	Low-pass filter selection	0000H	—	Each	✔	✔	✔	✔
PB24	*MVS	Slight vibration suppression control	0000H	—	Each	✔	✔	✔	✔
PB25	*BOP1	Function selection B-1	0000H	—	Each	✔	✔	✔	✔
PB26	*CDP	Gain switching function	0000H	—	Each	✔	✔	✔	✔
PB27	CDL	Gain switching condition	10	kpulse/s pulse 1/min	Each	✔	✔	✔	✔
PB28	CDT	Gain switching time constant	1	ms	Each	✔	✔	✔	✔
PB29	GD2B	Load to motor inertia ratio/load to motor mass ratio after gain switching	7.00	Multiplier	Each	✔	✔	✔	✔
PB30	PG2B	Position loop gain after gain switching	0.0	rad/s	Each	✔	✔	✔	✔
PB31	VG2B	Speed loop gain after gain switching	0	rad/s	Each	✔	✔	✔	✔
PB32	VICB	Speed integral compensation after gain switching	0.0	ms	Each	✔	✔	✔	✔
PB33	VRF11B	Vibration suppression control 1 - Vibration frequency after gain switching	0.0	Hz	Each	✔	✔	✔	✔
PB34	VRF12B	Vibration suppression control 1 - Resonance frequency after gain switching	0.0	Hz	Each	✔	✔	✔	✔
PB35	VRF13B	Vibration suppression control 1 - Vibration frequency damping after gain switching	0.00	—	Each	✔	✔	✔	✔
PB36	VRF14B	Vibration suppression control 1 - Resonance frequency damping after gain switching	0.00	—	Each	✔	✔	✔	✔

Tab. A-30: *List of gain/filter setting parameters for MR-J4W-B (1)*

No.	Symbol	Name	Initial value	Unit	Each/ Common	Operation mode			
						Standard	Full.	Lin.	DD
PB37	—	For manufacturer setting	1600	—	—	—	—	—	—
PB38	—		0.00	—	—	—	—	—	—
PB39	—		0.00	—	—	—	—	—	—
PB40	—		0.00	—	—	—	—	—	—
PB41	—		0	—	—	—	—	—	—
PB42	—		0	—	—	—	—	—	—
PB43	—		0000H	—	—	—	—	—	—
PB44	—		0.00	—	—	—	—	—	—
PB45	CNHF	Command notch filter	0000H	—	Each	✔	✔	✔	✔
PB46	NH3	Machine resonance suppression filter 3	4500	Hz	Each	✔	✔	✔	✔
PB47	NHQ3	Notch shape selection 3	0000H	—	Each	✔	✔	✔	✔
PB48	NH4	Machine resonance suppression filter 4	4500	Hz	Each	✔	✔	✔	✔
PB49	NHQ4	Notch shape selection 4	0000H	—	Each	✔	✔	✔	✔
PB50	NH5	Machine resonance suppression filter 5	4500	Hz	Each	✔	✔	✔	✔
PB51	NHQ5	Notch shape selection 5	0000H	—	Each	✔	✔	✔	✔
PB52	VRF21	Vibration suppression control 2 - Vibration frequency	100.0	Hz	Each	✔	✔	✔	✔
PB53	VRF22	Vibration suppression control 2 - Resonance frequency	100.0	Hz	Each	✔	✔	✔	✔
PB54	VRF23	Vibration suppression control 2 - Vibration frequency damping	0.00	—	Each	✔	✔	✔	✔
PB55	VRF24	Vibration suppression control 2 - Resonance frequency damping	0.00	—	Each	✔	✔	✔	✔
PB56	VRF21B	Vibration suppression control 2 - Vibration frequency after gain switching	0.0	Hz	Each	✔	✔	✔	✔
PB57	VRF22B	Vibration suppression control 2 - Resonance frequency after gain switching	0.0	Hz	Each	✔	✔	✔	✔
PB58	VRF23B	Vibration suppression control 2 - Vibration frequency damping after gain switching	0.00		Each	✔	✔	✔	✔
PB59	VRF24B	Vibration suppression control 2 - Resonance frequency damping after gain switching	0.00	—	Each	✔	✔	✔	✔
PB60	PG1B	Model loop gain after gain switching	0.0	rad/s	Each	✔	✔	✔	✔
PB61	—	For manufacturer setting	0.0	—	—	—	—	—	—
PB62	—		0000H	—	—	—	—	—	—
PB63	—		0000H	—	—	—	—	—	—
PB64	—		0000H	—	—	—	—	—	—

Tab. A-30: *List of gain/filter setting parameters for MR-J4W-B (2)*

A.4.4 Extension setting parameters (PC□□)

No.	Symbol	Name	Initial value	Unit	Each/ Common	Operation mode			
						Standard	Full.	Lin.	DD
PC01	ERZ	Error excessive alarm level	0	rev mm	Each	✔	✔	✔	✔
PC02	MBR	Electromagnetic brake sequence output	0	ms	Each	✔	✔	✔	✔
PC03	*ENRS	Encoder output pulse selection	0000H	—	Each	✔	✔	✔	✔
PC04	**COP1	Function selection C-1	0000H	—	Each	✔	✔	✔	✔
PC05	**COP2	Function selection C-2	0000H	—	Each	✔	—	—	—
PC06	*COP3	Function selection C-3	0000H	—	Each	✔	✔	✔	✔
PC07	ZSP	Zero speed	50	1/min mm/s	Each	✔	✔	✔	✔
PC08	OSL	Overspeed alarm detection level	0	1/min mm/s	Each	✔	✔	✔	✔
PC09	MOD1	Analog monitor 1 output	0000H	—	Common	✔	—	—	—
PC10	MOD2	Analog monitor 2 output	0001H	—	Common	✔	—	—	—
PC11	MO1	Analog monitor 1 offset	0	mV	Common	✔	—	—	—
PC12	MO2	Analog monitor 2 offset	0	mV	Common	✔	—	—	—
PC13	MOSDL	Analog monitor - Feedback position output standard data - Low	0	pulse	Each	✔	—	—	—
PC14	MOSDH	Analog monitor - Feedback position output standard data - High	0	10000 pulses	Each	✔	—	—	—
PC15	—	For manufacturer setting	0	—	—	—	—	—	—
PC16	—		0000H	—	—	—	—	—	—
PC17	**COP4	Function selection C-4	0000H	—	Each	✔	✔	✔	✔
PC18	*COP5	Function selection C-5	0000H	—	Common	✔	✔	✔	✔
PC19	—	For manufacturer setting	0000H	—	—	—	—	—	—
PC20	*COP7	Function selection C-7	0000H	—	Common	✔	✔	✔	✔
PC21	*BPS	Alarm history clear	0000H	—	Each	✔	✔	✔	✔
PC22	—	For manufacturer setting	0	—	—	—	—	—	—
PC23	—		0000H	—	—	—	—	—	—
PC24	RSBR	Forced stop deceleration time constant	100	ms	Each	✔	✔	✔	✔
PC25	—	For manufacturer setting	0	—	—	—	—	—	—
PC26	—		0000H	—	—	—	—	—	—
PC27	**COP9	Function selection C-9	0000H	—	Each	✔ ①	✔	✔	—
PC28	—	For manufacturer setting	0000H	—	—	—	—	—	—
PC29	*COPB	Function selection C-B	0000H	—		✔	—	✔	✔
PC30	—	For manufacturer setting	0	—	—	—	—	—	—
PC31	RSUP1	Vertical axis freefall prevention compensation amount	0	0.0001rev 0.01mm	Each	✔	✔	✔	✔
PC32	—	For manufacturer setting	0000H	—	—	—	—	—	—
PC33	—		0	—	—	—	—	—	—
PC34	—		100	—	—	—	—	—	—
PC35	—		0000H	—	—	—	—	—	—
PC36	—		0000H	—	—	—	—	—	—
PC37	—		0000H	—	—	—	—	—	—

Tab. A-31: *List of extension setting parameters for MR-J4W-B (1)*

No.	Symbol	Name	Initial value	Unit	Each/ Common	Operation mode			
						Standard	Full.	Lin.	DD
PC38	ERW	Error excessive warning level	0	rev mm	Each	✔	✔	✔	✔
PC39	—	For manufacturer setting	0000H	—	—	—	—	—	—
PC40	—		0000H	—	—	—	—	—	—
PC41	—		0000H	—	—	—	—	—	—
PC42	—		0000H	—	—	—	—	—	—
PC43	—		0000H	—	—	—	—	—	—
PC44	—		0000H	—	—	—	—	—	—
PC45	—		0000H	—	—	—	—	—	—
PC46	—		0000H	—	—	—	—	—	—
PC47	—		0000H	—	—	—	—	—	—
PC48	—		0000H	—	—	—	—	—	—
PC49	—		0000H	—	—	—	—	—	—
PC50	—		0000H	—	—	—	—	—	—
PC51	—		0000H	—	—	—	—	—	—
PC52	—		0000H	—	—	—	—	—	—
PC53	—		0000H	—	—	—	—	—	—
PC54	—		0000H	—	—	—	—	—	—
PC55	—		0000H	—	—	—	—	—	—
PC56	—		0000H	—	—	—	—	—	—
PC57	—		0000H	—	—	—	—	—	—
PC58	—		0000H	—	—	—	—	—	—
PC59	—		0000H	—	—	—	—	—	—
PC60	—		0000H	—	—	—	—	—	—
PC61	—		0000H	—	—	—	—	—	—
PC62	—		0000H	—	—	—	—	—	—
PC63	—		0000H	—	—	—	—	—	—
PC64	—		0000H	—	—	—	—	—	—

Tab. A-31: *List of extension setting parameters for MR-J4W-B (2)*

① It is available when the scale measurement function is enabled (PA22 is "1□□□" or "2□□□").

A.4.5 I/O setting parameters (PD□□)

No.	Symbol	Name	Initial value	Unit	Each/ Common	Operation mode			
						Standard	Full.	Lin.	DD
PD01	—	For manufacturer setting	0000H	—	—	—	—	—	—
PD02	*DIA2	Input signal automatic on selection 2	0000H	—	Each	✔	✔	✔	✔
PD03	—	For manufacturer setting	0020H	—	—	—	—	—	—
PD04	—		0021H	—	—	—	—	—	—
PD05	—		0022H	—	—	—	—	—	—
PD06	—		0000H	—	—	—	—	—	—
PD07	*DO1	Output device selection 1	0005H	—	Each	✔	✔	✔	✔
PD08	*DO2	Output device selection 2	0004H	—	Common	✔	✔	✔	✔
PD09	*DO3	Output device selection 3	0003H	—	Common	✔	✔	✔	✔
PD10	—	For manufacturer setting	0000H	—	—	—	—	—	—
PD11	*DIF	Input filter setting	0004H	ms	Common	✔	✔	✔	✔
PD12	*DOP1	Function selection D-1	0000H	—	Each	✔	✔	✔	✔
PD13	—	For manufacturer setting	0000H	—	—	—	—	—	—
PD14	*DOP3	Function selection D-3	0000H	—	Each	✔	✔	✔	✔
PD15	—	For manufacturer setting	0000H	—	—	—	—	—	—
PD16	—		0000H	—	—	—	—	—	—
PD17	—		0000H	—	—	—	—	—	—
PD18	—		0000H	—	—	—	—	—	—
PD19	—		0000H	—	—	—	—	—	—
PD20	—		0	—	—	—	—	—	—
PD21	—		0	—	—	—	—	—	—
PD22	—		0	—	—	—	—	—	—
PD23	—		0	—	—	—	—	—	—
PD24	—		0000H	—	—	—	—	—	—
PD25	—		0000H	—	—	—	—	—	—
PD26	—		0000H	—	—	—	—	—	—
PD27	—		0000H	—	—	—	—	—	—
PD28	—		0000H	—	—	—	—	—	—
PD29	—		0000H	—	—	—	—	—	—
PD30	—		0	—	—	—	—	—	—
PD31	—		0	—	—	—	—	—	—
PD32	—		0	—	—	—	—	—	—
PD33	—		0000H	—	—	—	—	—	—
PD34	—		0000H	—	—	—	—	—	—
PD35	—		0000H	—	—	—	—	—	—
PD36	—		0000H	—	—	—	—	—	—
PD37	—		0000H	—	—	—	—	—	—
PD38	—		0000H	—	—	—	—	—	—
PD39	—		0000H	—	—	—	—	—	—
PD40	—		0000H	—	—	—	—	—	—
PD41	—		0000H	—	—	—	—	—	—
PD42	—		0000H	—	—	—	—	—	—

Tab. A-32: *List of I/O setting parameters for MR-J4W-B (1)*

No.	Symbol	Name	Initial value	Unit	Each/ Common	Operation mode			
						Standard	Full.	Lin.	DD
PD43	—	For manufacturer setting	0000H	—	—	—	—	—	—
PD44	—		0000H	—	—	—	—	—	—
PD45	—		0000H	—	—	—	—	—	—
PD46	—		0000H	—	—	—	—	—	—
PD47	—		0000H	—	—	—	—	—	—
PD48	—		0000H	—	—	—	—	—	—

Tab. A-32: *List of I/O setting parameters for MR-J4W-B (2)*

A.4.6 Extension setting 2 parameters (PE□□)

No.	Symbol	Name	Initial value	Unit	Each/ Common	Operation mode			
						Standard	Full.	Lin.	DD
PE01	**FCT1	Fully closed loop function selection 1	0000H	—	Each	—	✔	—	—
PE02	—	For manufacturer setting	0000H	—	—	—	—	—	—
PE03	*FCT2	Fully closed loop function selection 2	0003H	—	Each	—	✔	—	—
PE04	**FBN	Fully closed loop control - Feedback pulse electronic gear 1 - Numerator	1	—	Each	—	✔	—	—
PE05	**FBD	Fully closed loop control - Feedback pulse electronic gear 1 - Denominator	1	—	Each	—	✔	—	—
PE06	BC1	Fully closed loop control - Speed deviation error detection level	400	1/min	Each	—	✔	—	—
PE07	BC2	Fully closed loop control - Position deviation error detection level	100	kpulse	Each	—	✔	—	—
PE08	DUF	Fully closed loop dual feedback filter	10	rad/s	Each	—	✔	—	—
PE09	—	For manufacturer setting	0000H	—	—	—	—	—	—
PE10	FCT3	Fully closed loop function selection 3	0000H	—	Each	✔	✔	—	—
PE11	—	For manufacturer setting	0000H	—	—	—	—	—	—
PE12	—		0000H	—	—	—	—	—	—
PE13	—		0000H	—	—	—	—	—	—
PE14	—		0111H	—	—	—	—	—	—
PE15	—		20	—	—	—	—	—	—
PE16	—		0000H	—	—	—	—	—	—
PE17	—		0000H	—	—	—	—	—	—
PE18	—		0000H	—	—	—	—	—	—
PE19	—		0000H	—	—	—	—	—	—
PE20	—		0000H	—	—	—	—	—	—
PE21	—		0000H	—	—	—	—	—	—
PE22	—		0000H	—	—	—	—	—	—
PE23	—		0000H	—	—	—	—	—	—
PE24	—		0000H	—	—	—	—	—	—
PE25	—		0000H	—	—	—	—	—	—
PE26	—		0000H	—	—	—	—	—	—
PE27	—		0000H	—	—	—	—	—	—
PE28	—		0000H	—	—	—	—	—	—
PE29	—		0000H	—	—	—	—	—	—
PE30	—		0000H	—	—	—	—	—	—
PE31	—		0000H	—	—	—	—	—	—
PE32	—		0000H	—	—	—	—	—	—
PE33	—		0000H	—	—	—	—	—	—
PE34	**FBN2	Fully closed loop control - Feedback pulse electronic gear 2 - Numerator	1	—	Each	—	✔	—	—
PE35	**FBD2	Fully closed loop control - Feedback pulse electronic gear 2 - Denominator	1	—	Each	—	✔	—	—
PE36	—	For manufacturer setting	0.0	—	—	—	—	—	—
PE37	—		0.00	—	—	—	—	—	—
PE38	—		0.00	—	—	—	—	—	—
PE39	—		20	—	—	—	—	—	—
PE40	—		0000H	—	—	—	—	—	—
PE41	EOP3	Function selection E-3	0000H	—	Each	✔	✔	✔	✔

Tab. A-33: *List of Extension setting 2 parameters for MR-J4W-B (1)*

No.	Symbol	Name	Initial value	Unit	Each/ Common	Operation mode			
						Standard	Full.	Lin.	DD
PE42	—	For manufacturer setting	0	—	—	—	—	—	—
PE43	—		0.0	—	—	—	—	—	—
PE44	—		0	—	—	—	—	—	—
PE45	—		0	—	—	—	—	—	—
PE46	—		0	—	—	—	—	—	—
PE47	TOF	Torque offset	0	0.01%	Each	✔	✔	—	—
PE48	—	For manufacturer setting	0000H	—	—	—	—	—	—
PE49	—		0	—	—	—	—	—	—
PE50	—		0	—	—	—	—	—	—
PE51	—		0000H	—	—	—	—	—	—
PE52	—		0000H	—	—	—	—	—	—
PE53	—		0000H	—	—	—	—	—	—
PE54	—		0000H	—	—	—	—	—	—
PE55	—		0000H	—	—	—	—	—	—
PE56	—		0000H	—	—	—	—	—	—
PE57	—		0000H	—	—	—	—	—	—
PE58	—		0000H	—	—	—	—	—	—
PE59	—		0000H	—	—	—	—	—	—
PE60	—		0000H	—	—	—	—	—	—
PE61	—		0.00	—	—	—	—	—	—
PE62	—		0.00	—	—	—	—	—	—
PE63	—		0.00	—	—	—	—	—	—
PE64	—		0.00	—	—	—	—	—	—

Tab. A-33: *List of Extension setting 2 parameters for MR-J4W-B (2)*

A.4.7 Extension setting 3 parameters (PF□□)

No.	Symbol	Name	Initial value	Unit	Each/ Common	Operation mode			
						Standard	Full.	Lin.	DD
PF01	—	For manufacturer setting	0000H	—	—	—	—	—	—
PF02	*FOP2	Function selection F-2	0000H	—	Common	✔	✔	✔	✔
PF03	—	For manufacturer setting	0000H	—	—	—	—	—	—
PF04	—		0	—	—	—	—	—	—
PF05	—		0000H	—	—	—	—	—	—
PF06	*FOP5	Function selection F-5	0000H	—	Each	✔	✔	✔	✔
PF07	—	For manufacturer setting	0000H	—	—	—	—	—	—
PF08	—		0000H	—	—	—	—	—	—
PF09	—		0	—	—	—	—	—	—
PF10	—		0	—	—	—	—	—	—
PF11	—		0	—	—	—	—	—	—
PF12	DBT	Electronic dynamic brake operating time	2000	ms	Each	✔	✔	✔	✔
PF13	—	For manufacturer setting	0000H	—	—	—	—	—	—
PF14	—		10	—	—	—	—	—	—
PF15	—		0000H	—	—	—	—	—	—
PF16	—		0000H	—	—	—	—	—	—
PF17	—		0000H	—	—	—	—	—	—
PF18	**STOD	STO diagnosis error detection time	0	s	Common	✔	✔	✔	✔
PF19	—	For manufacturer setting	0000H	—	—	—	—	—	—
PF20	—		0000H	—	—	—	—	—	—
PF21	DRT	Drive recorder switching time setting	0	s	Common	✔	✔	✔	✔
PF22	—	For manufacturer setting	200	—	—	—	—	—	—
PF23	OSCL1	Vibration tough drive - Oscillation detection level	50	%	Each	✔	✔	✔	✔
PF24	*OSCL2	Vibration tough drive function selection	0000H	—	Each	✔	✔	✔	✔
PF25	CVAT	SEMI-F47 function - Instantaneous power failure detection time	200	ms	Common	✔	✔	✔	✔
PF26	—	For manufacturer setting	0	—	—	—	—	—	—
PF27	—		0	—	—	—	—	—	—
PF28	—		0	—	—	—	—	—	—
PF29	—		0000H	—	—	—	—	—	—
PF30	—		0	—	—	—	—	—	—
PF31	FRIC	Machine diagnosis function - Friction judgement speed	0	1/min mm/s	Each	✔	✔	✔	✔
PF32	—	For manufacturer setting	50	—	—	—	—	—	—
PF33	—		0000H	—	—	—	—	—	—
PF34	—		0000H	—	—	—	—	—	—
PF35	—		0000H	—	—	—	—	—	—
PF36	—		0000H	—	—	—	—	—	—
PF37	—		0000H	—	—	—	—	—	—
PF38	—		0000H	—	—	—	—	—	—
PF39	—		0000H	—	—	—	—	—	—
PF40	—		0000H	—	—	—	—	—	—
PF41	—		0000H	—	—	—	—	—	—

Tab. A-34: *List of Extension setting 3 parameters for MR-J4W-B (1)*

No.	Symbol	Name	Initial value	Unit	Each/ Common	Operation mode			
						Standard	Full.	Lin.	DD
PF42	—	For manufacturer setting	0000H	—	—	—	—	—	—
PF43	—		0000H	—	—	—	—	—	—
PF44	—		0000H	—	—	—	—	—	—
PF45	—		0000H	—	—	—	—	—	—
PF46	—		0000H	—	—	—	—	—	—
PF47	—		0000H	—	—	—	—	—	—
PF48	—		0000H	—	—	—	—	—	—

Tab. A-34: *List of Extension setting 3 parameters for MR-J4W-B (2)*

A.4.8 Linear servo motor/DD motor setting parameters (PL□□)

No.	Symbol	Name	Initial value	Unit	Each/ Common	Operation mode			
						Standard	Full.	Lin.	DD
PL01	**LIT1	Linear servo motor/DD motor function selection 1	0301H	—	Each	—	—	✔	✔
PL02	**LIM	Linear encoder resolution - Numerator	1000	µm	Each	—	—	✔	—
PL03	**LID	Linear encoder resolution - Denominator	1000	µm	Each	—	—	✔	—
PL04	*LIT2	Linear servo motor/DD motor function selection 2	0003H	—	Each	—	—	✔	✔
PL05	LB1	Position deviation error detection level	0	mm 0.01rev	Each	—	—	✔	✔
PL06	LB2	Speed deviation error detection level	0	1/min mm/s	Each	—	—	✔	✔
PL07	LB3	Torque/thrust deviation error detection level	100	%	Each	—	—	✔	✔
PL08	*LIT3	Linear servo motor/DD motor function selection 3	0010H	—	Each	—	—	✔	✔
PL09	LPWM	Magnetic pole detection voltage level	30	%	Each	—	—	✔	✔
PL10	—	For manufacturer setting	5	—	—	—	—	—	—
PL11	—		100	—	—	—	—	—	—
PL12	—		500	—	—	—	—	—	—
PL13	—		0000H	—	—	—	—	—	—
PL14	—		0	—	—	—	—	—	—
PL15	—		20	—	—	—	—	—	—
PL16	—		0	—	—	—	—	—	—
PL17	LTSTS	Magnetic pole detection - Minute position detection method - Function selection	0000H	—	Each	—	—	✔	✔
PL18	IDLV	Magnetic pole detection - Minute position detection method - Identification signal amplitude	0	%	Each	—	—	✔	✔
PL19	—	For manufacturer setting	0	—	—	—	—	—	—
PL20	—		0	—	—	—	—	—	—
PL21	—		0	—	—	—	—	—	—
PL22	—		0	—	—	—	—	—	—
PL23	—		0000H	—	—	—	—	—	—
PL24	—		0	—	—	—	—	—	—
PL25	—		0000H	—	—	—	—	—	—
PL26	—		0000H	—	—	—	—	—	—
PL27	—		0000H	—	—	—	—	—	—
PL28	—		0000H	—	—	—	—	—	—
PL29	—		0000H	—	—	—	—	—	—
PL30	—		0000H	—	—	—	—	—	—
PL31	—		0000H	—	—	—	—	—	—
PL32	—		0000H	—	—	—	—	—	—
PL33	—		0000H	—	—	—	—	—	—
PL34	—		0000H	—	—	—	—	—	—
PL35	—		0000H	—	—	—	—	—	—
PL36	—		0000H	—	—	—	—	—	—
PL37	—		0000H	—	—	—	—	—	—
PL38	—		0000H	—	—	—	—	—	—
PL39	—		0000H	—	—	—	—	—	—
PL40	—		0000H	—	—	—	—	—	—

Tab. A-35: *List of linear servo motor/DD motor setting parameters for MR-J4W-B (1)*

No.	Symbol	Name	Initial value	Unit	Each/ Common	Operation mode			
						Standard	Full.	Lin.	DD
PL41	—	For manufacturer setting	0000H	—	—	—	—	—	—
PL42	—		0000H	—	—	—	—	—	—
PL43	—		0000H	—	—	—	—	—	—
PL44	—		0000H	—	—	—	—	—	—
PL45	—		0000H	—	—	—	—	—	—
PL46	—		0000H	—	—	—	—	—	—
PL47	—		0000H	—	—	—	—	—	—
PL48	—		0000H	—	—	—	—	—	—

Tab. A-35: *List of linear servo motor/DD motor setting parameters for MR-J4W-B (2)*

NOTES

The parameter whose symbol is preceded by * is enabled with the following conditions:

- *: After setting the parameter, cycle the power or reset the controller.
- **: After setting the parameter, cycle the power.

How to set parameters

- Each: Set parameters for each axis of A, B, and C.
- Common: Set parameters for common axis of A, B, and C. Be sure to set the same value to all axes.

The same values are set as default for all axes.

Abbreviations of operation modes indicate the followings.

- Standard: Standard (semi closed loop system) use of the rotary servo motor
- Full.: Fully closed loop system use of the rotary servo motor
- Lin.: Linear servo motor use
- DD: Direct drive (DD) motor use

For MR-J4W2-0306B6 servo amplifiers, the operation mode is available only in standard (semi closed loop system).

Setting an out of range value to each parameter will trigger AL. 37 (Parameter error).

NOTES

The following parameters are not available with 200 W or more MR-J4W-B servo amplifiers.

- Pr. PC09 (Analog monitor 1 output)
- Pr. PC10 (Analog monitor 2 output)
- Pr. PC11 (Analog monitor 1 offset)
- Pr. PC12 (Analog monitor 2 offset)
- Pr. PC13 (Analog monitor - Feedback position output standard data - Low)
- Pr. PC14 (Analog monitor - Feedback position output standard data - High)

The following parameters are not available with MR-J4W2-0303B6 servo amplifiers.

- Pr. PA02 (Regenerative option)
- Pr. PA17 (Servo motor series setting)
- Pr. PA18 (Servo motor type setting)
- Pr. PA22 (Position control composition selection)
- Pr. PC20 (Function selection C-7)
- Pr. PC27 (Function selection C-9)
- Pr. PE01 (Fully closed loop function selection 1)
- Pr. PE03 (Fully closed loop function selection 2)
- Pr. PE04 (Fully closed loop control - Feedback pulse electronic gear 1 - Numerator)
- Pr. PE05 (Fully closed loop control - Feedback pulse electronic gear 1 - Denominator)
- Pr. PE06 (Fully closed loop control - Speed deviation error detection level)
- Pr. PE07 (Fully closed loop control - Position deviation error detection level)
- Pr. PE08 (Fully closed loop dual feedback filter)
- Pr. PE10 (Fully closed loop function selection 3)
- Pr. PE34 (Fully closed loop control - Feedback pulse electronic gear 2 - Numerator)
- Pr. PE35 (Fully closed loop control - Feedback pulse electronic gear 2 - Denominator)

Linear servo motor/DD motor setting parameters (Pr. PL□□) cannot be used with MR-J4W2-0303B6 servo amplifiers.

When you connect the amplifier to a servo system controller, servo parameter values of the servo system controller will be written to each parameter.

Setting may not be made to some parameters and their ranges depending on the servo system controller model, servo amplifier software version, and MR Configurator2 software version. For details, refer to the servo system controller user's manual.

A.5 Additional information about the series MR-J4-GF(-RJ)

A.5.1 Status display

Display	Status	Description
1 ⋮ 5	Initializing	System check in progress
A b	Initializing	No connection with the servo system controller
A C	Initializing	During initial communication with the servo system controller
A A	Initializing standby	Communication disconnection with the servo system controller
b # # ①	Ready-off	The ready-off signal from the servo system controller was received.
d # # ①	Servo-on	The ready-off signal from the servo system controller was received.
C # # ①	Servo-off	The ready-off signal from the servo system controller was received.
* * * ②	Alarm and warning	The alarm No. and the warning No. that occurred is displayed. ④
8 8 8	CPU error	CPU watchdog error has occurred.
b # #. ① d # #. C # #.	Test operation mode ③	JOG operation, positioning operation, program operation, output signal (DO) forced output, or motor-less operation, or single-step feed was set.

Tab. A-36: *Indication list of MR-J4-GF(-RJ)*

① ## is displayed in hexadecimal. The meanings of ## are listed below.

##	Description
01	Axis No. 1
≀	≀
64	Axis No. 64

② ** indicates the alarm No. and the warning No.

③ Requires the MR Configurator2.

④ Only a list of alarms and warnings is listed in section 8.2. Refer to "MELSERVO J4 Servo Amplifier Instruction Manual (Troubleshooting)" for details of alarms and warnings.

A.5.2 Basic setting parameters (PA□□)

No.	Symbol	Name	Initial value	Unit	Operation mode			
					Standard	Full.	Lin.	DD
PA01	**STY	Operation mode	1000H	—	✔	✔	✔	✔
PA02	**REG	Regenerative option	0000H	—	✔	✔	✔	✔
PA03	*ABS	Absolute position detection system	0000H	—	✔	✔	✔	✔
PA04	*AOP1	Function selection A-1	2000H	—	✔	✔	✔	✔
PA05	—	For manufacturer setting	10000	—	—	—	—	—
PA06	—		1	—	—	—	—	—
PA07	—		1	—	—	—	—	—
PA08	ATU	Auto tuning mode	0001H	—	✔	✔	✔	✔
PA09	RSP	Auto tuning response	16	—	✔	✔	✔	✔
PA10	INP	In-position range	1600	pulse	✔	✔	✔	✔
PA11	TLP	Forward rotation torque limit/positive direction thrust limit	1000.0	%	✔	✔	✔	✔
PA12	TLN	Reverse rotation torque limit/negative direction thrust limit	1000.0	%	✔	✔	✔	✔
PA13	—	For manufacturer setting	0000H	—	—	—	—	—
PA14	*POL	Rotation direction selection/travel direction selection	0	—	✔	✔	✔	✔
PA15	*ENR	Encoder output pulses	4000	pulse/rev	✔	✔	✔	✔
PA16	*ENR2	Encoder output pulses 2	1	—	✔	✔	✔	✔
PA17	**MSR	Servo motor series setting	0000H	—	—	—	✔	—
PA18	**MTY	Servo motor type setting	0000H	—	—	—	✔	—
PA19	*BLK	Parameter writing inhibit	00ABH	—	✔	✔	✔	✔
PA20	*TDS	Tough drive setting	0000H	—	✔	✔	✔	✔
PA21	*AOP3	Function selection A-3	0001H	—	✔	✔	✔	✔
PA22	**PCS	Position control composition selection	0000H	—	✔	—	—	—
PA23	DRAT	Drive recorder arbitrary alarm trigger setting	0000H	—	✔	✔	✔	✔
PA24	AOP4	Function selection A-4	0000H	—	✔	✔	✔	✔
PA25	OTHOV	One-touch tuning – Overshoot permissible level	0	%	✔	✔	✔	✔
PA26	*AOP5	Function selection A-5	0000H	—	✔	✔	✔	✔
PA27	—	For manufacturer setting	0000H	—	—	—	—	—
PA28	—		0000H	—	—	—	—	—
PA29	—		0000H	—	—	—	—	—
PA30	—		0000H	—	—	—	—	—
PA31	—		0000H	—	—	—	—	—
PA32	—		0000H	—	—	—	—	—

Tab. A-37: *List of basic setting parameters for MR-J4-GF(-RJ)*

A.5.3 Gain/filter setting parameters (PB□□)

No.	Symbol	Name	Initial value	Unit	Operation mode			
					Standard	Full.	Lin.	DD
PB01	FILT	Adaptive tuning mode (adaptive filter II)	0000H	—	✔	✔	✔	✔
PB02	VRFT	Vibration suppression control tuning mode (advanced vibration suppression control II)	0000H	—	✔	✔	✔	✔
PB03	—	For manufacturer setting	18000	—	—	—	—	—
PB04	FFC	Feed forward gain	0	%	✔	✔	✔	✔
PB05	—	For manufacturer setting	500	—	—	—	—	—
PB06	GD2	Load to motor inertia ratio/load to motor mass ratio	7.00	Multiplier	✔	✔	✔	✔
PB07	PG1	Model loop gain	15.0	rad/s	✔	✔	✔	✔
PB08	PG2	Position loop gain	37.0	rad/s	✔	✔	✔	✔
PB09	VG2	Speed loop gain	823	rad/s	✔	✔	✔	✔
PB10	VIC	Speed integral compensation	33.7	ms	✔	✔	✔	✔
PB11	VDC	Speed differential compensation	980	—	✔	✔	✔	✔
PB12	OVA	Overshoot amount compensation	0	%	✔	✔	✔	✔
PB13	NH1	Machine resonance suppression filter 1	4500	Hz	✔	✔	✔	✔
PB14	NHQ1	Notch shape selection 1	0000h	—	✔	✔	✔	✔
PB15	NH2	Machine resonance suppression filter 2	4500	Hz	✔	✔	✔	✔
PB16	NHQ2	Notch shape selection 2	0000H	—	✔	✔	✔	✔
PB17	NHF	Shaft resonance suppression filter	0000H	—	✔	✔	✔	✔
PB18	LPF	Low-pass filter setting	3141	rad/s	✔	✔	✔	✔
PB19	VRF11	Vibration suppression control 1 - Vibration frequency	100.0	Hz	✔	✔	✔	✔
PB20	VRF12	Vibration suppression control 1 - Resonance frequency	100.0	Hz	✔	✔	✔	✔
PB21	VRF13	Vibration suppression control 1 - Vibration frequency damping	0.00	—	✔	✔	✔	✔
PB22	VRF14	Vibration suppression control 1 - Resonance frequency damping	0.00	—	✔	✔	✔	✔
PB23	VFBF	Low-pass filter selection	0000H	—	✔	✔	✔	✔
PB24	*MVS	Slight vibration suppression control	0000H	—	✔	✔	✔	✔
PB25	*BOP1	Function selection B-1	0000H	—	✔	✔	✔	✔
PB26	*CDP	Gain switching function	0000H	—	✔	✔	✔	✔
PB27	CDL	Gain switching condition	10	kpulse/s pulse 1/min	✔	✔	✔	✔
PB28	CDT	Gain switching time constant	1	ms	✔	✔	✔	✔
PB29	GD2B	Load to motor inertia ratio/load to motor mass ratio after gain switching	7.00	Multiplier	✔	✔	✔	✔
PB30	PG2B	Position loop gain after gain switching	0.0	rad/s	✔	✔	✔	✔
PB31	VG2B	Speed loop gain after gain switching	0	rad/s	✔	✔	✔	✔
PB32	VICB	Speed integral compensation after gain switching	0.0	ms	✔	✔	✔	✔
PB33	VRF11B	Vibration suppression control 1 - Vibration frequency after gain switching	0.0	Hz	✔	✔	✔	✔
PB34	VRF12B	Vibration suppression control 1 - Resonance frequency after gain switching	0.0	Hz	✔	✔	✔	✔
PB35	VRF13B	Vibration suppression control 1 - Vibration frequency damping after gain switching	0.00	—	✔	✔	✔	✔
PB36	VRF14B	Vibration suppression control 1 - Resonance frequency damping after gain switching	0.00	—	✔	✔	✔	✔
PB37	—	For manufacturer setting	1600	—	—	—	—	—
PB38	—		0.00	—	—	—	—	—
PB39	—		0.00	—	—	—	—	—
PB40	—		0.00	—	—	—	—	—

Tab. A-38: *List of gain/filter setting parameters for MR-J4-GF(-RJ) (1)*

No.	Symbol	Name	Initial value	Unit	Operation mode			
					Standard	Full.	Lin.	DD
PB41	—	For manufacturer setting	0000H	—	—	—	—	—
PB42	—		0000H	—	—	—	—	—
PB43	—		0000H	—	—	—	—	—
PB44	—		0.00	—	—	—	—	—
PB45	CNHF	Command notch filter	0000H	—	✔	✔	✔	✔
PB46	NH3	Machine resonance suppression filter 3	4500	Hz	✔	✔	✔	✔
PB47	NHQ3	Notch shape selection 3	0000H	—	✔	✔	✔	✔
PB48	NH4	Machine resonance suppression filter 4	4500	Hz	✔	✔	✔	✔
PB49	NHQ4	Notch shape selection 4	0000H	—	✔	✔	✔	✔
PB50	NH5	Machine resonance suppression filter 5	4500	Hz	✔	✔	✔	✔
PB51	NHQ5	Notch shape selection 5	0000H	—	✔	✔	✔	✔
PB52	VRF21	Vibration suppression control 2 - Vibration frequency	100.0	Hz	✔	✔	✔	✔
PB53	VRF22	Vibration suppression control 2 - Resonance frequency	100.0	Hz	✔	✔	✔	✔
PB54	VRF23	Vibration suppression control 2 - Vibration frequency damping	0.00	—	✔	✔	✔	✔
PB55	VRF24	Vibration suppression control 2 - Resonance frequency damping	0.00	—	✔	✔	✔	✔
PB56	VRF21B	Vibration suppression control 2 - Vibration frequency after gain switching	0.0	Hz	✔	✔	✔	✔
PB57	VRF22B	Vibration suppression control 2 - Resonance frequency after gain switching	0.0	Hz	✔	✔	✔	✔
PB58	VRF23B	Vibration suppression control 2 - Vibration frequency damping after gain switching	0.00		✔	✔	✔	✔
PB59	VRF24B	Vibration suppression control 2 - Resonance frequency damping after gain switching	0.00	—	✔	✔	✔	✔
PB60	PG1B	Model loop gain after gain switching	0.0	rad/s	✔	✔	✔	✔
PB61	—	For manufacturer setting	0.0	—	—	—	—	—
PB62	—		0000H	—	—	—	—	—
PB63	—		0000H	—	—	—	—	—
PB64	—		0000H	—	—	—	—	—

Tab. A-38: *List of gain/filter setting parameters for MR-J4-GF(-RJ) (2)*

A.5.4 Extension setting parameters (PC□□)

No.	Symbol	Name	Initial value	Unit	Operation mode			
					Standard	Full.	Lin.	DD
PC01	ERZ	Error excessive alarm level	0	rev mm	✔	✔	✔	✔
PC02	MBR	Electromagnetic brake sequence output	0	ms	✔	✔	✔	✔
PC03	*ENRS	Encoder output pulse selection	0000H	—	✔	✔	✔	✔
PC04	**COP1	Function selection C-1	0000H	—	✔	✔	✔	✔
PC05	**COP2	Function selection C-2	0000H	—	✔	—	—	—
PC06	*COP3	Function selection C-3	0000H	—	✔	✔	✔	✔
PC07	ZSP	Zero speed	50	1/min mm/s	✔	✔	✔	✔
PC08	OSL	Overspeed alarm detection level	0	1/min mm/s	✔	✔	✔	✔
PC09	MOD1	Analog monitor 1 output	0000H	—	✔	✔	✔	✔
PC10	MOD2	Analog monitor 2 output	0000H	—	✔	✔	✔	✔
PC11	MO1	Analog monitor 1 offset	0	mV	✔	✔	✔	✔
PC12	MO2	Analog monitor 2 offset	0	mV	✔	✔	✔	✔
PC13	—	For manufacturer setting	0	—	—	—	—	—
PC14	—		0	—	—	—	—	—
PC15	—		0	—	—	—	—	—
PC16	—		0000H	—	—	—	—	—
PC17	**COP4	Function selection C-4	0000H	—	—	—	✔	—
PC18	*COP5	Function selection C-5	0010H	—	✔	✔	✔	✔
PC19	*COP6	Function selection C-6	0000H	—	✔	✔	✔	✔
PC20	*COP7	Function selection C-7	0000H	—	✔	✔	✔	✔
PC21	*BPS	Alarm history clear	0000H	—	✔	✔	✔	✔
PC22	—	For manufacturer setting	0	—	—	—	—	—
PC23	—		0000H	—	—	—	—	—
PC24	RSBR	Forced stop deceleration time constant	100	ms	✔	✔	✔	✔
PC25	—	For manufacturer setting	0	—	—	—	—	—
PC26	**COP8	Function selection C-8	0000H	—	✔ ①	✔	✔	✔
PC27	**COP9	Function selection C-9	0000H	—	✔ ①	✔	✔	—
PC28	—	For manufacturer setting	0000H	—	—	—	—	—
PC29	*COPB	Function selection C-B	1000H	—	✔	✔	✔	✔
PC30	—	For manufacturer setting	0	—	—	—	—	—
PC31	RSUP1	Vertical axis freefall prevention compensation amount	0	0.0001rev 0.01mm	✔	✔	✔	✔
PC32	—	For manufacturer setting	0000H	—	—	—	—	—
PC33	—		0	—	—	—	—	—
PC34	—		100	—	—	—	—	—
PC35	—		0000H	—	—	—	—	—
PC36	—		0000H	—	—	—	—	—
PC37	—		0000H	—	—	—	—	—

Tab. A-39: *List of extension setting parameters for MR-J4-GF(-RJ) (1)*

① It is available when the scale measurement function is enabled (PA22 is "1□□□" or "2□□□").

No.	Symbol	Name	Initial value	Unit	Operation mode			
					Standard	Full.	Lin.	DD
PC38	ERW	Error excessive warning level	0	rev mm	✔	✔	✔	✔
PC39	—	For manufacturer setting	0000H	—	—	—	—	—
PC40	—		0000H	—	—	—	—	—
PC41	—		0000H	—	—	—	—	—
PC42	—		0000H	—	—	—	—	—
PC43	—		0000H	—	—	—	—	—
PC44	—		0000H	—	—	—	—	—
PC45	—		0000H	—	—	—	—	—
PC46	—		0000H	—	—	—	—	—
PC47	—		0000H	—	—	—	—	—
PC48	—		0000H	—	—	—	—	—
PC49	—		0000H	—	—	—	—	—
PC50	—		0000H	—	—	—	—	—
PC51	—		0000H	—	—	—	—	—
PC52	—		0000H	—	—	—	—	—
PC53	—		0000H	—	—	—	—	—
PC54	—		0000H	—	—	—	—	—
PC55	—		0000H	—	—	—	—	—
PC56	—		0000H	—	—	—	—	—
PC57	—		0000H	—	—	—	—	—
PC58	—		0000H	—	—	—	—	—
PC59	—		0000H	—	—	—	—	—
PC60	—		0000H	—	—	—	—	—
PC61	—		0000H	—	—	—	—	—
PC62	—		0000H	—	—	—	—	—
PC63	—		0000H	—	—	—	—	—
PC64	—		0000H	—	—	—	—	—
PC65	—		50.00	—	—	—	—	—
PC66	—		10	—	—	—	—	—
PC67	FEWL	Following error output level	0000H	pulse	✔	✔	✔	✔
PC68	FEWH		00C0H		✔	✔	✔	✔
PC69	FEWF	Following error output filtering time	10	ms	✔	✔	✔	✔
PC70	—	For manufacturer setting	100	—	—	—	—	—
PC71	—		10	—	—	—	—	—
PC72	—		20.00	—	—	—	—	—
PC73	—		10	—	—	—	—	—
PC74	—		10.0	—	—	—	—	—
PC75	—		10	—	—	—	—	—
PC76	*COPE	Function selection C-E	0001H	—	✔	✔	✔	✔
PC77	—	For manufacturer setting	0.0	—	—	—	—	—
PC78	—		0000H	—	—	—	—	—
PC79	—		0000H	—	—	—	—	—
PC80	—		0000H	—	—	—	—	—

Tab. A-39: *List of extension setting parameters for MR-J4-GF(-RJ) (2)*

A.5.5 I/O setting parameters (PD□□)

No.	Symbol	Name	Initial value	Unit	Operation mode			
					Standard	Full.	Lin.	DD
PD01	*DIA1	Input signal automatic on selection 1	0000H	—	✔	✔	✔	✔
PD02	—	For manufacturer setting	0000H	—	—	—	—	—
PD03	*DI1	Input device selection 1	000AH	—	✔	✔	✔	✔
PD04	*DI2	Input device selection 2	000BH	—	✔	✔	✔	✔
PD05	*DI3	Input device selection 3	0022H	—	✔	✔	✔	✔
PD06	—	For manufacturer setting	0000H	—	—	—	—	—
PD07	*DO1	Output device selection 1	0005H	—	✔	✔	✔	✔
PD08	*DO2	Output device selection 2	0004H	—	✔	✔	✔	✔
PD09	*DO3	Output device selection 3	0003H	—	✔	✔	✔	✔
PD10	—	For manufacturer setting	0000H	—	—	—	—	—
PD11	*DIF	Input filter setting	0004H	ms	✔	✔	✔	✔
PD12	*DOP1	Function selection D-1	0101H	—	✔	✔	✔	✔
PD13	*DOP2	Function selection D-2	0000H	—	✔	✔	✔	✔
PD14	*DOP3	Function selection D-3	0000H	—	✔	✔	✔	✔
PD15	—	For manufacturer setting	0000H	—	—	—	—	—
PD16	—		0000H	—	—		—	—
PD17	—		0000H	—	—	—	—	—
PD18	—		0000H	—	—	—	—	—
PD19	—		0000H	—	—	—	—	—
PD20	—		0	—	—	—	—	—
PD21	—		0	—	—	—	—	—
PD22	—		0	—	—	—	—	—
PD23	—		0	—	—	—	—	—
PD24	—		0000H	—	—	—	—	—
PD25	—		0000H	—	—	—	—	—
PD26	—		0000H	—	—	—	—	—
PD27	—		0000H	—	—	—	—	—
PD28	—		0000H	—	—	—	—	—
PD29	—		0000H	—	—	—	—	—
PD30	—		0	—		—	—	—
PD31			0	—		—	—	—
PD32	—		0	—	—	—	—	—
PD33	—		0000H	—	—	—	—	—
PD34	—		0000H	—	—	—	—	—
PD35	—		0000H	—	—	—	—	—
PD36	—		0000H	—	—	—	—	—
PD37	*TPOP	Touch probe function selection	0000H	—	✔	✔	✔	✔
PD38	—	For manufacturer setting	002CH	—	—	—	—	—
PD39	—		002DH	—	—	—	—	—
PD40	—		0	—	—	—	—	—
PD41	*DOP4	Function selection D-4	0000H	—	✔	✔	✔	✔

Tab. A-40: *List of I/O setting parameters for MR-J4-GF(-RJ) (1)*

No.	Symbol	Name	Initial value	Unit	Operation mode			
					Standard	Full.	Lin.	DD
PD42	—	For manufacturer setting	0000H	—	—	—	—	—
PD43	—		0000H	—	—	—	—	—
PD44	—		0000H	—	—	—	—	—
PD45	—		0000H	—	—	—	—	—
PD46	—		0000H	—	—	—	—	—
PD47	—		0000H	—	—	—	—	—
PD48	—		0000H	—	—	—	—	—

Tab. A-40: *List of I/O setting parameters for MR-J4-GF(-RJ) (2)*

A.5.6 Extension setting 2 parameters (PE□□)

No.	Symbol	Name	Initial value	Unit	Operation mode			
					Standard	Full.	Lin.	DD
PE01	**FCT1	Fully closed loop function selection 1	0000H	—	—	✔	—	—
PE02	—	For manufacturer setting	0000H	—	—	—	—	—
PE03	*FCT2	Fully closed loop function selection 2	0003H	—	—	✔	—	—
PE04	**FBN	Fully closed loop control - Feedback pulse electronic gear 1 - Numerator	1	—	—	✔	—	—
PE05	**FBD	Fully closed loop control - Feedback pulse electronic gear 1 - Denominator	1	—	—	✔	—	—
PE06	BC1	Fully closed loop control - Speed deviation error detection level	400	1/min	—	✔	—	—
PE07	BC2	Fully closed loop control - Position deviation error detection level	100	kpulse	—	✔	—	—
PE08	DUF	Fully closed loop dual feedback filter	10	rad/s	—	✔	—	—
PE09	—	For manufacturer setting	0000H	—	—	—	—	—
PE10	FCT3	Fully closed loop function selection 3	0000H	—	—	✔	—	—
PE11	—	For manufacturer setting	0000H	—	—	—	—	—
PE12	—		0000H	—	—	—	—	—
PE13	—		0000H	—	—	—	—	—
PE14	—		0111H	—	—	—	—	—
PE15	—		20	—	—	—	—	—
PE16	—		0000H	—	—	—	—	—
PE17	—		0000H	—	—	—	—	—
PE18	—		0000H	—	—	—	—	—
PE19	—		0000H	—	—	—	—	—
PE20	—		0000H	—	—	—	—	—
PE21	—		0000H	—	—	—	—	—
PE22	—		0000H	—	—	—	—	—
PE23	—		0000H	—	—	—	—	—
PE24	—		0000H	—	—	—	—	—
PE25	—		0000H	—	—	—	—	—
PE26	—		0000H	—	—	—	—	—
PE27	—		0000H	—	—	—	—	—
PE28	—		0000H	—	—	—	—	—
PE29	—		0000H	—	—	—	—	—
PE30	—		0000H	—	—	—	—	—
PE31	—		0000H	—	—	—	—	—
PE32	—		0000H	—	—	—	—	—
PE33	—		0000H	—	—	—	—	—
PE34	**FBN2	Fully closed loop control - Feedback pulse electronic gear 2 - Numerator	1	—	—	✔	—	—
PE35	**FBD2	Fully closed loop control - Feedback pulse electronic gear 2 - Denominator	1	—	—	✔	—	—
PE36	—	For manufacturer setting	0.0	—	—	—	—	—
PE37	—		0.00	—	—	—	—	—
PE38	—		0.00	—	—	—	—	—
PE39	—		20	—	—	—	—	—
PE40	—		0000H	—	—	—	—	—
PE41	EOP3	Function selection E-3	0000H	—	✔	✔	✔	✔
PE42	—	For manufacturer setting	0	—	—	—	—	—

Tab. A-41: *List of Extension setting 2 parameters for MR-J4-GF(-RJ) (1)*

No.	Symbol	Name	Initial value	Unit	Operation mode			
					Standard	Full.	Lin.	DD
PE43	—	For manufacturer setting	0.0	—	—	—	—	—
PE44	LMCP	Lost motion compensation positive-side compensation value selection	0	0.01%	✔	✔	✔	✔
PE45	LMCN	Lost motion compensation negative-side compensation value selection	0	0.01%	✔	✔	✔	✔
PE46	LMFLT	Lost motion filter setting	0	0.1 ms	✔	✔	✔	✔
PE47	TOF	Torque offset	0	0.01%	✔	✔	—	—
PE48	*LMOP	Lost motion compensation function selection	0000H	—	✔	✔	✔	✔
PE49	LMCD	Lost motion compensation timing	0	0.1 ms	✔	✔	✔	✔
PE50	LMCT	Lost motion compensation non-sensitive band	0	pulse kpulse	✔	✔	✔	✔
PE51	—	For manufacturer setting	0000H	—	—	—	—	—
PE52	—		0000H	—	—	—	—	—
PE53	—		0000H	—	—	—	—	—
PE54	—		0000H	—	—	—	—	—
PE55	—		0000H	—	—	—	—	—
PE56	—		0000H	—	—	—	—	—
PE57	—		0000H	—	—	—	—	—
PE58	—		0000H	—	—	—	—	—
PE59	—		0000H	—	—	—	—	—
PE60	—		0000H	—	—	—	—	—
PE61	—		0.00	—	—	—	—	—
PE62	—		0.00	—	—	—	—	—
PE63	—		0.00	—	—	—	—	—
PE64	—		0.00	—	—	—	—	—

Tab. A-41: *List of Extension setting 2 parameters for MR-J4-GF(-RJ) (2)*

A.5.7 Extension setting 3 parameters (PF□□)

No.	Symbol	Name	Initial value	Unit	Operation mode			
					Standard	Full.	Lin.	DD
PF01	—	For manufacturer setting	0000H	—	—	—	—	—
PF02	—		0000H	—	—	—	—	—
PF03	—		0000H	—	—	—	—	—
PF04	—		0	—	—	—	—	—
PF05	—		0000H	—	—	—	—	—
PF06	*FOP5	Function selection F-5	0000H	—	✔	✔	—	—
PF07	—	For manufacturer setting	0000H	—	—	—	—	—
PF08	—		0000H	—	—	—	—	—
PF09	—		0	—	—	—	—	—
PF10	—		0	—	—	—	—	—
PF11	—		0	—	—	—	—	—
PF12	DBT	Electronic dynamic brake operating time	2000	ms	✔	✔	—	—
PF13	—	For manufacturer setting	0000H	—	—	—	—	—
PF14	—		10	—	—	—	—	—
PF15	—		0000H	—	—	—	—	—
PF16	—		0000H	—	—	—	—	—
PF17	—		0000H	—	—	—	—	—
PF18	**STOD	STO diagnosis error detection time	10	s	✔	✔	✔	✔
PF19	TSL	Friction failure prediction - Compensation coefficient 1	0	0.001% °C	✔	✔	✔	✔
PF20	TIC	Friction failure prediction - Compensation coefficient 2	0	0.1%	✔	✔	✔	✔
PF21	DRT	Drive recorder switching time setting	0	s	✔	✔	✔	✔
PF22	—	For manufacturer setting	200	—	—	—	—	—
PF23	OSCL1	Vibration tough drive - Oscillation detection level	50	%	✔	✔	✔	✔
PF24	*OSCL2	Vibration tough drive function selection	0000H	—	✔	✔	✔	✔
PF25	CVAT	SEMI-F47 function - Instantaneous power failure detection time	200	ms	✔	✔	✔	✔
PF26	—	For manufacturer setting	0	—	—	—	—	—
PF27	—		0	—	—	—	—	—
PF28	—		0	—	—	—	—	—
PF29	—		0000H	—	—	—	—	—
PF30	—		0	—	—	—	—	—
PF31	FRIC	Machine diagnosis function - Friction judgement speed	0	1/min mm/s	✔	✔	✔	✔
PF32	—	For manufacturer setting	50	—	—	—	—	—
PF33	—		0000H	—	—	—	—	—
PF34	*MFP	Machine diagnosis function selection	0000H	—	✔	✔	✔	✔
PF35	—	For manufacturer setting	0000H	—	—	—	—	—
PF36	—		0000H	—	—	—	—	—
PF37	—		0000H	—	—	—	—	—
PF38	—		0000H	—	—	—	—	—
PF39	—		0000H	—	—	—	—	—
PF40	MFPP	Friction failure prediction parameter	0000H	—	✔	✔	✔	✔

Tab. A-42: *List of Extension setting 3 parameters for MR-J4-GF(-RJ) (1)*

No.	Symbol	Name	Initial value	Unit	Operation mode			
					Standard	Full.	Lin.	DD
PF41	FPMT	Failure prediction - Servo motor total travel distance	0	rev m	✔	✔	✔	✔
PF42	PAV	Friction failure prediction - Average characteristic	0	0.1%	✔	✔	✔	✔
PF43	PSD	Friction failure prediction - Standard deviation	0	0.1%	✔	✔	✔	✔
PF44	—	For manufacturer setting	0	—	—	—	—	—
PF45	VAV	Vibration failure prediction - Average characteristic	0	0.1%	✔	✔	✔	✔
PF46	VSD	Vibration failure prediction - Standard deviation	0	0.1%	✔	✔	✔	✔
PF47	—	For manufacturer setting	0000H	—	—	—	—	—
PF48	—		0000H	—	—	—	—	—
PF49	—		100	—	—	—	—	—
PF50	—		100	—	—	—	—	—
PF51	—		0000H	—	—	—	—	—
PF52	—		0000H	—	—	—	—	—
PF53	—		0	—	—	—	—	—
PF54	—		0	—	—	—	—	—
PF55	—		0	—	—	—	—	—
PF56	—		0	—	—	—	—	—
PF57	—		0000H	—	—	—	—	—
PF58	—		0000H	—	—	—	—	—
PF59	—		0000H	—	—	—	—	—
PF60	—		0000H	—	—	—	—	—
PF61	—		0000H	—	—	—	—	—
PF62	—		0000H	—	—	—	—	—
PF63	—		0000H	—	—	—	—	—
PF64	—		0000H	—	—	—	—	—

Tab. A-42: *List of Extension setting 3 parameters for MR-J4-GF(-RJ) (2)*

A.5.8 Linear servo motor/DD motor setting parameters (PL□□)

No.	Symbol	Name	Initial value	Unit	Operation mode			
					Standard	Full.	Lin.	DD
PL01	**LIT1	Linear servo motor/DD motor function selection 1	0301H	—	—	—	✔	✔
PL02	**LIM	Linear encoder resolution - Numerator	1000	µm	—	—	✔	—
PL03	**LID	Linear encoder resolution - Denominator	1000	µm	—	—	✔	—
PL04	*LIT2	Linear servo motor/DD motor function selection 2	0003H	—	—	—	✔	✔
PL05	LB1	Position deviation error detection level	0	mm 0.01 rev	—	—	✔	✔
PL06	LB2	Speed deviation error detection level	0	mm/s 1/min	—	—	✔	✔
PL07	LB3	Torque/thrust deviation error detection level	100	%	—	—	✔	✔
PL08	*LIT3	Linear servo motor/DD motor function selection 3	0010H	—	—	—	✔	✔
PL09	LPWM	Magnetic pole detection voltage level	30	%	—	—	✔	✔
PL10	—	For manufacturer setting	5	—	—	—	—	—
PL11	—		100	—	—	—	—	—
PL12	—		500	—	—	—	—	—
PL13	—		0000H	—	—	—	—	—
PL14	—		0000H	—	—	—	—	—
PL15	—		20	—	—	—	—	—
PL16	—		0	—	—	—	—	—
PL17	LTSTS	Magnetic pole detection - Minute position detection method - Function selection	0000H	—	—	—	✔	✔
PL18	IDLV	Magnetic pole detection - Minute position detection method - Identification signal amplitude	0	%	—	—	✔	✔
PL19	—	For manufacturer setting	0	—	—	—	—	—
PL20	—		0	—	—	—	—	—
PL21	—		0	—	—	—	—	—
PL22	—		0	—	—	—	—	—
PL23	—		0000H	—	—	—	—	—
PL24	—		0	—	—	—	—	—
PL25	—		0000H	—	—	—	—	—
PL26	—		0000H	—	—	—	—	—
PL27	—		0000H	—	—	—	—	—
PL28	—		0000H	—	—	—	—	—
PL29	—		0000H	—	—	—	—	—
PL30	—		0000H	—	—	—	—	—
PL31	—		0000H	—	—	—	—	—
PL32	—		0000H	—	—	—	—	—
PL33	—		0000H	—	—	—	—	—
PL34	—		0000H	—	—	—	—	—
PL35	—		0000H	—	—	—	—	—
PL36	—		0000H	—	—	—	—	—
PL37	—		0000H	—	—	—	—	—
PL38	—		0000H	—	—	—	—	—
PL39	—		0000H	—	—	—	—	—
PL40	—		0000H	—	—	—	—	—

Tab. A-43: *List of linear servo motor/DD motor setting parameters for MR-J4-GF(-RJ) (1)*

No.	Symbol	Name	Initial value	Unit	Operation mode			
					Standard	Full.	Lin.	DD
PL41	—	For manufacturer setting	0000H	—	—	—	—	—
PL42	—		0000H	—	—	—	—	—
PL43	—		0000H	—	—	—	—	—
PL44	—		0000H	—	—	—	—	—
PL45	—		0000H	—	—	—	—	—
PL46	—		0000H	—	—	—	—	—
PL47	—		0000H	—	—	—	—	—
PL48	—		0000H	—	—	—	—	—

Tab. A-43: *List of linear servo motor/DD motor setting parameters for MR-J4-GF(-RJ) (2)*

A.5.9 Positioning control parameters ([Pr. PT□□)

No.	Symbol	Name	Initial value	Unit	Operation mode			
					Standard	Full.	Lin.	DD
PT01	—	For manufacturer setting	0300H	—	—	—	—	—
PT02	—		0001H	—	—	—	—	—
PT03	—		0000H	—	—	—	—	—
PT04	—		0000H	—	—	—	—	—
PT05	ZRF	Home position return speed	100.00	1/min mm/s	✔	✔	✔	✔
PT06	CRF	Creep speed	10.00	1/min mm/s	✔	✔	✔	✔
PT07	ZST	Home position shift distance	0	pulse	✔	✔	✔	✔
PT08	—	For manufacturer setting	0	—	—	—	—	—
PT09	DCT	Travel distance after proximity dog	0	pulse	✔	✔	✔	✔
PT10	ZTM	Stopper type home position return stopper time	100	ms	✔	✔	✔	✔
PT11	ZTT	Stopper type home position return torque limit value	15.0	%	✔	✔	✔	✔
PT12	—	For manufacturer setting	0	—	—	—	—	—
PT13	—		100	—	—	—	—	—
PT14	—		0	—	—	—	—	—
PT15	LMPL	Software limit +	0000H	pulse	✔	✔	✔	✔
PT16	LMPH		0000H	—	✔	✔	✔	✔
PT17	LMNL	Software limit -	0000H	pulse	✔	✔	✔	✔
PT18	LMNH		0000H	—	✔	✔	✔	✔
PT19	—	For manufacturer setting	0000H	—	—	—	—	—
PT20	—		0000H	—	—	—	—	—
PT21	—		0000H	—	—	—	—	—
PT22	—		0000H	—	—	—	—	—
PT23	—		0	—	—	—	—	—
PT24	—		0	—	—	—	—	—
PT25	—		0	—	—	—	—	—
PT26	—		0000H	—	—	—	—	—
PT27	—		0000H	—	—	—	—	—
PT28	—		8	—	—	—	—	—
PT29	*TOP3	Function selection T-3	0000H	—	✔	✔	✔	✔
PT30	—	For manufacturer setting	0000H	—	—	—	—	—
PT31	—		0000H	—	—	—	—	—
PT32	—		0000H	—	—	—	—	—
PT33	—		0000H	—	—	—	—	—
PT34	—		0000H	—	—	—	—	—
PT35	—		0000H	—	—	—	—	—
PT36	—		0000H	—	—	—	—	—
PT37	—		10	—	—	—	—	—
PT38	—		0000H	—	—	—	—	—
PT39	—		100	—	—	—	—	—
PT40	—		0	—	—	—	—	—
PT41	ORP	Home position return inhibit function selection	0000H	—	✔	✔	✔	✔

Tab. A-44: *List of positioning control parameters for MR-J4-GF(-RJ) (1)*

No.	Symbol	Name	Initial value	Unit	Operation mode			
					Standard	Full.	Lin.	DD
PT42	—	For manufacturer setting	0	—	—	—	—	—
PT43	—		0	—	—	—	—	—
PT44	—		0000H	—	—	—	—	—
PT45	HMM	Home position return type	37	—	✔	✔	✔	✔
PT46	—	For manufacturer setting	0000H	—	—	—	—	—
PT47	—		0000H	—	—	—	—	—
PT48	—		0000H	—	—	—	—	—
PT49	—		0	—	—	—	—	—
PT50	—		0	—	—	—	—	—
PT51	—		0	—	—	—	—	—
PT52	—		0	—	—	—	—	—
PT53	—		0.0	—	—	—	—	—
PT54	—		0	—	—	—	—	—
PT55	*TOP8	Function selection T-8	0000H	—	✔	✔	✔	✔
PT56	HMA	Home position return acceleration time constant	0	ms	✔	✔	✔	✔
PT57	HMB	Home position return deceleration time constant	0	ms	✔	✔	✔	✔
PT58	—	For manufacturer setting	100.00	—	—	—	—	—
PT59	—		500.00	—	—	—	—	—
PT60	—		1000.00	—	—	—	—	—
PT61	—		200.00	—	—	—	—	—
PT62	—		0000H	—	—	—	—	—
PT63	—		0000H	—	—	—	—	—
PT64	—		0000H	—	—	—	—	—
PT65	—		100.00	—	—	—	—	—
PT66	—		20000.00	—	—	—	—	—
PT67	VLMT	Speed limit	500.00	1/min mm/s	✔	✔	✔	✔
PT68	—	For manufacturer setting	0102H	—	—	—	—	—
PT69	ZSTH	Home position shift distance (extension parameter)	0	pulse	✔	✔	✔	✔
PT70	—	For manufacturer setting	0000H	—	—	—	—	—
PT71	DCTH	Travel distance after proximity dog (extension parameter)	0	pulse	✔	✔	✔	✔
PT72	—	For manufacturer setting	0000H	—	—	—	—	—
PT73	—		0000H	—	—	—	—	—
PT74	—		0000H	—	—	—	—	—
PT75	—		0000H	—	—	—	—	—
PT76	—		0000H	—	—	—	—	—
PT77	—		0000H	—	—	—	—	—
PT78	—		0000H	—	—	—	—	—
PT79	—		0000H	—	—	—	—	—
PT80	—		0000H	—	—	—	—	—

Tab. A-44: *List of positioning control parameters for MR-J4-GF(-RJ) (2)*

A.5.10 Network setting parameters (Pr. PN□□)

No.	Symbol	Name	Initial value	Unit	Operation mode			
					Standard	Full.	Lin.	DD
PN01	—	For manufacturer setting	0	—	—	—	—	—
PN02	CERT	Communication error detection time	0	ms	✔	✔	✔	✔
PN03	**NWMD	Communication mode setting for CC-Link IE communication	0000H	—	✔	✔	✔	✔
PN04	**NWNO	CC-Link IE communication network number	0	—	✔	✔	✔	✔
PN05	CERI	Communication error detection frequency setting	0	%	✔	✔	✔	✔
PN06	NOP1	Function selection N-1	0000H	—	✔	✔	✔	✔
PN07	—	For manufacturer setting	0000H	—	—	—	—	—
PN08	—		0000H	—	—	—	—	—
PN09	—		0000H	—	—	—	—	—
PN10	—		0000H	—	—	—	—	—
PN11	—		0000H	—	—	—	—	—
PN12	—		0000H	—	—	—	—	—
PN13	—		0000H	—	—	—	—	—
PN14	—		0000H	—	—	—	—	—
PN15	—		0000H	—	—	—	—	—
PN16	—		0000H	—	—	—	—	—
PN17	—		0000H	—	—	—	—	—
PN18	—		0000H	—	—	—	—	—
PN19	—		0000H	—	—	—	—	—
PN20	—		0000H	—	—	—	—	—
PN21	—		0000H	—	—	—	—	—
PN22	—		0000H	—	—	—	—	—
PN23	—		0000H	—	—	—	—	—
PN24	—		0000H	—	—	—	—	—
PN25	—		0000H	—	—	—	—	—
PN26	—		0000H	—	—	—	—	—
PN27	—		0000H	—	—	—	—	—
PN28	—		0000H	—	—	—	—	—
PN29	—		0000H	—	—	—	—	—
PN30	—		0000H	—	—	—	—	—
PN31	—		0000H	—	—	—	—	—
PN32	—		0000H	—	—	—	—	—

Tab. A-45: *List of network setting parameters for MR-J4-GF(-RJ)*

NOTES

The parameter whose symbol is preceded by * is enabled with the following conditions:

- *: After setting the parameter, cycle the power or reset the controller.
- **: After setting the parameter, cycle the power.

Abbreviations of operation modes indicate the followings. Operation modes other than the standard mode is used with servo amplifiers with software version A1 or later.

- Standard: Standard (semi closed loop system) use of the rotary servo motor
- Full.: Fully closed loop system use of the rotary servo motor
- Lin.: Linear servo motor use
- DD: Direct drive (DD) motor use

A.6 Additional information about the series MR-J4-TM

A.6.1 Status display

Display	Status	Description
1 ⋮ 5	Initializing	System check in progress
A b	Initializing	No connection with the servo system controller
A C	Initializing	During initial communication with the servo system controller
A A	Initializing standby	Communication disconnection with the servo system controller
b # # ①	Ready-off	The ready-off signal from the servo system controller was received.
d # # ①	Servo-on	The ready-off signal from the servo system controller was received.
C # # ①	Servo-off	The ready-off signal from the servo system controller was received.
* * * ②	Alarm and warning	The alarm No. and the warning No. that occurred is displayed.
8 8 8	CPU error	CPU watchdog error has occurred.
b # #. ① d # #. C # #.	Test operation mode ③	JOG operation, positioning operation, program operation, output signal (DO) forced output or motor-less operation was set.

Tab. A-46: *Indication list of MR-J4-TM(-RJ)*

① ## is displayed in hexadecimal. The meanings of ## are listed below.

##	Description
00	For the last 2 digits of axis No. or automatic setting with the servo system controller.
01 ⋮ FF	Last 2 digits of axis No.

② ** indicates the alarm No. and the warning No.

③ Requires the MR Configurator2.

A.6.2 Basic setting parameters (PA□□)

No.	Symbol	Name	Initial value	Unit	Operation mode			
					Standard	Full.	Lin.	DD
PA01	**STY	Operation mode	1000H	—	✔	✔	✔	✔
PA02	**REG	Regenerative option	0000H	—	✔	✔	✔	✔
PA03	*ABS	Absolute position detection system	0000H	—	✔	✔	✔	✔
PA04	*AOP1	Function selection A-1	2000H	—	✔	✔	✔	✔
PA05	—	For manufacturer setting	10000	—	—	—	—	—
PA06	*CMX	Electronic gear numerator	1	—	✔	✔	✔	✔
PA07	*CDV	Electronic gear denominator	1	—	✔	✔	✔	✔
PA08	ATU	Auto tuning mode	0001H	—	✔	✔	✔	✔
PA09	RSP	Auto tuning response	16	—	✔	✔	✔	✔
PA10	INP	In-position range	1600	10^{-3} degree pulse	✔	✔	✔	✔
PA11	TLP	Forward rotation torque limit/positive direction thrust limit	1000.0	%	✔	✔	✔	✔
PA12	TLN	Reverse rotation torque limit/negative direction thrust limit	1000.0	%	✔	✔	✔	✔
PA13	—	For manufacturer setting	0000H	—	—	—	—	—
PA14	*POL	Rotation direction selection/travel direction selection	0	—	✔	✔	✔	✔
PA15	*ENR	Encoder output pulses	4000	pulse/rev	✔	✔	✔	✔
PA16	*ENR2	Encoder output pulses 2	1	—	✔	✔	✔	✔
PA17	**MSR	Servo motor series setting	0000H	—	—	—	✔	—
PA18	**MTY	Servo motor type setting	0000H	—	—	—	✔	—
PA19	*BLK	Parameter writing inhibit	00ABH	—	✔	✔	✔	✔
PA20	*TDS	Tough drive setting	0000H	—	✔	✔	✔	✔
PA21	*AOP3	Function selection A-3	0001H	—	✔	✔	✔	✔
PA22	**PCS	Position control composition selection	0000H	—	✔	—	—	—
PA23	DRAT	Drive recorder arbitrary alarm trigger setting	0000H	—	✔	✔	✔	✔
PA24	AOP4	Function selection A-4	0000H	—	✔	✔	✔	✔
PA25	OTHOV	One-touch tuning – Overshoot permissible level	0	%	✔	✔	✔	✔
PA26	*AOP5	Function selection A-5	0000H	—	✔	✔	✔	✔
PA27	—	For manufacturer setting	0000H	—	—	—	—	—
PA28	—		0000H	—	—	—	—	—
PA29	—		0000H	—	—	—	—	—
PA30	—		0000H	—	—	—	—	—
PA31	—		0000H	—	—	—	—	—
PA32	—		0000H	—	—	—	—	—

Tab. A-47: *List of basic setting parameters for MR-J4-TM*

A.6.3 Gain/filter setting parameters (PB□□)

No.	Symbol	Name	Initial value	Unit	Operation mode			
					Standard	Full.	Lin.	DD
PB01	FILT	Adaptive tuning mode (adaptive filter II)	0000H	—	✔	✔	✔	✔
PB02	VRFT	Vibration suppression control tuning mode (advanced vibration suppression control II)	0000H	—	✔	✔	✔	✔
PB03	—	For manufacturer setting	18000	—	—	—	—	—
PB04	FFC	Feed forward gain	0	%	✔	✔	✔	✔
PB05	—	For manufacturer setting	500	—	—	—	—	—
PB06	GD2	Load to motor inertia ratio/load to motor mass ratio	7.00	Multiplier	✔	✔	✔	✔
PB07	PG1	Model loop gain	15.0	rad/s	✔	✔	✔	✔
PB08	PG2	Position loop gain	37.0	rad/s	✔	✔	✔	✔
PB09	VG2	Speed loop gain	823	rad/s	✔	✔	✔	✔
PB10	VIC	Speed integral compensation	33.7	ms	✔	✔	✔	✔
PB11	VDC	Speed differential compensation	980	—	✔	✔	✔	✔
PB12	OVA	Overshoot amount compensation	0	%	✔	✔	✔	✔
PB13	NH1	Machine resonance suppression filter 1	4500	Hz	✔	✔	✔	✔
PB14	NHQ1	Notch shape selection 1	0000h	—	✔	✔	✔	✔
PB15	NH2	Machine resonance suppression filter 2	4500	Hz	✔	✔	✔	✔
PB16	NHQ2	Notch shape selection 2	0000H	—	✔	✔	✔	✔
PB17	NHF	Shaft resonance suppression filter	0000H	—	✔	✔	✔	✔
PB18	LPF	Low-pass filter setting	3141	rad/s	✔	✔	✔	✔
PB19	VRF11	Vibration suppression control 1 - Vibration frequency	100.0	Hz	✔	✔	✔	✔
PB20	VRF12	Vibration suppression control 1 - Resonance frequency	100.0	Hz	✔	✔	✔	✔
PB21	VRF13	Vibration suppression control 1 - Vibration frequency damping	0.00	—	✔	✔	✔	✔
PB22	VRF14	Vibration suppression control 1 - Resonance frequency damping	0.00	—	✔	✔	✔	✔
PB23	VFBF	Low-pass filter selection	0000H	—	✔	✔	✔	✔
PB24	*MVS	Slight vibration suppression control	0000H	—	✔	✔	✔	✔
PB25	*BOP1	Function selection B-1	0000H	—	✔	✔	✔	✔
PB26	*CDP	Gain switching function	0000H	—	✔	✔	✔	✔
PB27	CDL	Gain switching condition	10	kpulse/s pulse 1/min	✔	✔	✔	✔
PB28	CDT	Gain switching time constant	1	ms	✔	✔	✔	✔
PB29	GD2B	Load to motor inertia ratio/load to motor mass ratio after gain switching	7.00	Multiplier	✔	✔	✔	✔
PB30	PG2B	Position loop gain after gain switching	0.0	rad/s	✔	✔	✔	✔
PB31	VG2B	Speed loop gain after gain switching	0	rad/s	✔	✔	✔	✔
PB32	VICB	Speed integral compensation after gain switching	0.0	ms	✔	✔	✔	✔
PB33	VRF11B	Vibration suppression control 1 - Vibration frequency after gain switching	0.0	Hz	✔	✔	✔	✔
PB34	VRF12B	Vibration suppression control 1 - Resonance frequency after gain switching	0.0	Hz	✔	✔	✔	✔
PB35	VRF13B	Vibration suppression control 1 - Vibration frequency damping after gain switching	0.00	—	✔	✔	✔	✔
PB36	VRF14B	Vibration suppression control 1 - Resonance frequency damping after gain switching	0.00	—	✔	✔	✔	✔
PB37	—	For manufacturer setting	1600	—	—	—	—	—
PB38	—		0.00	—	—	—	—	—
PB39	—		0.00	—	—	—	—	—
PB40	—		0.00	—	—	—	—	—

Tab. A-48: *List of gain/filter setting parameters for MR-J4-TM (1)*

No.	Symbol	Name	Initial value	Unit	Operation mode			
					Standard	Full.	Lin.	DD
PB41	—	For manufacturer setting	0000H	—	—	—	—	—
PB42	—		0000H	—	—	—	—	—
PB43	—		0000H	—	—	—	—	—
PB44	—		0.00	—	—	—	—	—
PB45	CNHF	Command notch filter	0000H	—	✔	✔	✔	✔
PB46	NH3	Machine resonance suppression filter 3	4500	Hz	✔	✔	✔	✔
PB47	NHQ3	Notch shape selection 3	0000H	—	✔	✔	✔	✔
PB48	NH4	Machine resonance suppression filter 4	4500	Hz	✔	✔	✔	✔
PB49	NHQ4	Notch shape selection 4	0000H	—	✔	✔	✔	✔
PB50	NH5	Machine resonance suppression filter 5	4500	Hz	✔	✔	✔	✔
PB51	NHQ5	Notch shape selection 5	0000H	—	✔	✔	✔	✔
PB52	VRF21	Vibration suppression control 2 - Vibration frequency	100.0	Hz	✔	✔	✔	✔
PB53	VRF22	Vibration suppression control 2 - Resonance frequency	100.0	Hz	✔	✔	✔	✔
PB54	VRF23	Vibration suppression control 2 - Vibration frequency damping	0.00	—	✔	✔	✔	✔
PB55	VRF24	Vibration suppression control 2 - Resonance frequency damping	0.00	—	✔	✔	✔	✔
PB56	VRF21B	Vibration suppression control 2 - Vibration frequency after gain switching	0.0	Hz	✔	✔	✔	✔
PB57	VRF22B	Vibration suppression control 2 - Resonance frequency after gain switching	0.0	Hz	✔	✔	✔	✔
PB58	VRF23B	Vibration suppression control 2 - Vibration frequency damping after gain switching	0.00		✔	✔	✔	✔
PB59	VRF24B	Vibration suppression control 2 - Resonance frequency damping after gain switching	0.00	—	✔	✔	✔	✔
PB60	PG1B	Model loop gain after gain switching	0.0	rad/s	✔	✔	✔	✔
PB61	—	For manufacturer setting	0.0	—	—	—	—	—
PB62	—		0000H	—	—	—	—	—
PB63	—		0000H	—	—	—	—	—
PB64	—		0000H	—	—	—	—	—

Tab. A-48: *List of gain/filter setting parameters for MR-J4-TM (2)*

A.6.4 Extension setting parameters (PC□□)

No.	Symbol	Name	Initial value	Unit	Operation mode			
					Standard	Full.	Lin.	DD
PC01	ERZ	Error excessive alarm level	0	rev mm	✔	✔	✔	✔
PC02	MBR	Electromagnetic brake sequence output	0	ms	✔	✔	✔	✔
PC03	*ENRS	Encoder output pulse selection	0000H	—	✔	✔	✔	✔
PC04	**COP1	Function selection C-1	0000H	—	✔	✔	✔	✔
PC05	**COP2	Function selection C-2	0000H	—	✔	—	—	—
PC06	*COP3	Function selection C-3	0000H	—	✔	✔	✔	✔
PC07	ZSP	Zero speed	50	1/min mm/s	✔	✔	✔	✔
PC08	OSL	Overspeed alarm detection level	0	1/min mm/s	✔	✔	✔	✔
PC09	MOD1	Analog monitor 1 output	0000H	—	✔	✔	✔	✔
PC10	MOD2	Analog monitor 2 output	0000H	—	✔	✔	✔	✔
PC11	MO1	Analog monitor 1 offset	0	mV	✔	✔	✔	✔
PC12	MO2	Analog monitor 2 offset	0	mV	✔	✔	✔	✔
PC13	—	For manufacturer setting	0	—	—	—	—	—
PC14	—		0	—	—	—	—	—
PC15	—		0	—	—	—	—	—
PC16	—		0000H	—	—	—	—	—
PC17	**COP4	Function selection C-4	0000H	—	—	—	✔	—
PC18	*COP5	Function selection C-5	0010H	—	✔	✔	✔	✔
PC19	*COP6	Function selection C-6	0000H	—	✔	✔	✔	✔
PC20	*COP7	Function selection C-7	0000H	—	✔	✔	✔	✔
PC21	*BPS	Alarm history clear	0000H	—	✔	✔	✔	✔
PC22	—	For manufacturer setting	0	—	—	—	—	—
PC23	—		0000H	—	—	—	—	—
PC24	RSBR	Forced stop deceleration time constant	100	ms	✔	✔	✔	✔
PC25	—	For manufacturer setting	0	—	—	—	—	—
PC26	**COP8	Function selection C-8	0000H	—	✔ ①	✔	✔	✔
PC27	**COP9	Function selection C-9	0000H	—	✔ ①	✔	✔	—
PC28	—	For manufacturer setting	0000H	—	—	—	—	—
PC29	*COPB	Function selection C-B	1000H	—	✔	✔	✔	✔
PC30	—	For manufacturer setting	0	—	—	—	—	—
PC31	RSUP1	Vertical axis freefall prevention compensation amount	0	0.0001rev 0.01mm	✔	✔	✔	✔
PC32	—	For manufacturer setting	0000H	—	—	—	—	—
PC33	—		0	—	—	—	—	—
PC34	—		100	—	—	—	—	—
PC35	—		0000H	—	—	—	—	—
PC36	—		0000H	—	—	—	—	—
PC37	—		0000H	—	—	—	—	—

Tab. A-49: *List of extension setting parameters for MR-J4-TM (1)*

① It is available when the scale measurement function is enabled (PA22 is "1□□□" or "2□□□").

No.	Symbol	Name	Initial value	Unit	Operation mode			
					Standard	Full.	Lin.	DD
PC38	ERW	Error excessive warning level	0	rev mm	✔	✔	✔	✔
PC39	—	For manufacturer setting	0000H	—	—	—	—	—
PC40	—		0000H	—	—	—	—	—
PC41	—		0000H	—	—	—	—	—
PC42	—		0000H	—	—	—	—	—
PC43	—		0000H	—	—	—	—	—
PC44	—		0000H	—	—	—	—	—
PC45	—		0000H	—	—	—	—	—
PC46	—		0000H	—	—	—	—	—
PC47	—		0000H	—	—	—	—	—
PC48	—		0000H	—	—	—	—	—
PC49	—		0000H	—	—	—	—	—
PC50	—		0000H	—	—	—	—	—
PC51	—		0000H	—	—	—	—	—
PC52	—		0000H	—	—	—	—	—
PC53	—		0000H	—	—	—	—	—
PC54	—		0000H	—	—	—	—	—
PC55	—		0000H	—	—	—	—	—
PC56	—		0000H	—	—	—	—	—
PC57	—		0000H	—	—	—	—	—
PC58	—		0000H	—	—	—	—	—
PC59	—		0000H	—	—	—	—	—
PC60	—		0000H	—	—	—	—	—
PC61	—		0000H	—	—	—	—	—
PC62	—		0000H	—	—	—	—	—
PC63	—		0000H	—	—	—	—	—
PC64	—		0000H	—	—	—	—	—
PC65	ZSP2L	Zero speed 2 level	50.00	1/min mm/s	✔	✔	✔	✔
PC66	ZSP2F	Zero speed 2 filtering time	10	ms	✔	✔	✔	✔
PC67	FEWL	Following error output level	0000H	10^{-3} degree pulse	✔	✔	✔	✔
PC68	FEWH		00C0H		✔	✔	✔	✔
PC69	FEWF	Following error output filtering time	10	ms	✔	✔	✔	✔
PC70	INP2R	In-position 2 output range	100	10^{-3} degree pulse	✔	✔	✔	✔
PC71	INP2F	In-position 2 output filtering time	10	ms	✔	✔	✔	✔
PC72	SA2R	Speed reached 2 output range	20.00	1/min mm/s	✔	✔	✔	✔
PC73	SA2F	Speed reached 2 output filtering time	10	ms	✔	✔	✔	✔
PC74	—	For manufacturer setting	10.0	—	—	—	—	—
PC75	—		10	—	—	—	—	—
PC76	*COPE	Function selection C-E	0001H	—	✔	✔	✔	✔

Tab. A-49: *List of extension setting parameters for MR-J4-TM (2)*

No.	Symbol	Name	Initial value	Unit	Operation mode			
					Standard	Full.	Lin.	DD
PC77	—	For manufacturer setting	0000H	—	—	—	—	—
PC78	—		0000H	—	—	—	—	—
PC79	—		0000H	—	—	—	—	—
PC80	—		0000H	—	—	—	—	—

Tab. A-49: *List of extension setting parameters for MR-J4-TM (3)*

A.6.5 I/O setting parameters (PD□□)

No.	Symbol	Name	Initial value	Unit	Operation mode			
					Standard	Full.	Lin.	DD
PD01	*DIA1	Input signal automatic on selection 1	0000H	—	✔	✔	✔	✔
PD02	—	For manufacturer setting	0000H	—	—	—	—	—
PD03	*DI1	Input device selection 1	000AH	—	✔	✔	✔	✔
PD04	*DI2	Input device selection 2	000BH	—	✔	✔	✔	✔
PD05	*DI3	Input device selection 3	0022H	—	✔	✔	✔	✔
PD06	—	For manufacturer setting	0000H	—	—	—	—	—
PD07	*DO1	Output device selection 1	0005H	—	✔	✔	✔	✔
PD08	*DO2	Output device selection 2	0004H	—	✔	✔	✔	✔
PD09	*DO3	Output device selection 3	0003H	—	✔	✔	✔	✔
PD10	—	For manufacturer setting	0000H	—	—	—	—	—
PD11	*DIF	Input filter setting	0004H	ms	✔	✔	✔	✔
PD12	*DOP1	Function selection D-1	0101H	—	✔	✔	✔	✔
PD13	*DOP2	Function selection D-2	0000H	—	✔	✔	✔	✔
PD14	*DOP3	Function selection D-3	0000H	—	✔	✔	✔	✔
PD15	—	For manufacturer setting	0000H	—	—	—	—	—
PD16	—		0000H	—	—		—	—
PD17	—		0000H	—	—	—	—	—
PD18	—		0000H	—	—	—	—	—
PD19	—		0000H	—	—	—	—	—
PD20	—		0	—	—	—	—	—
PD21	—		0	—	—	—	—	—
PD22	—		0	—	—	—	—	—
PD23	—		0	—	—	—	—	—
PD24	—		0000H	—	—	—	—	—
PD25	—		0000H	—	—	—	—	—
PD26	—		0000H	—	—	—	—	—
PD27	—		0000H	—	—	—	—	—
PD28	—		0000H	—	—	—	—	—
PD29	—		0000H	—	—	—	—	—
PD30	—		0	—	—	—	—	—
PD31	—		0	—	—	—	—	—
PD32	—		0	—	—	—	—	—
PD33	—		0000H	—	—	—	—	—
PD34	—		0000H	—	—	—	—	—
PD35	—		0000H	—	—	—	—	—
PD36	—		0000H	—	—	—	—	—
PD37	*TPOP	Touch probe function selection	0000H	—	✔	✔	✔	✔
PD38	*TPR1	Touch probe selection 1	002CH	—	✔	✔	✔	✔
PD39	—	For manufacturer setting	002DH	—	—	—	—	—
PD40	—		0	—	—	—	—	—
PD41	—		0000H	—	—	—	—	—
PD42	—		0000H	—	—	—	—	—

Tab. A-50: *List of I/O setting parameters for MR-J4-TM (1)*

No.	Symbol	Name	Initial value	Unit	Operation mode			
					Standard	Full.	Lin.	DD
PD43	—	For manufacturer setting	0000H	—	—	—	—	—
PD44	—		0000H	—	—	—	—	—
PD45	—		0000H	—	—	—	—	—
PD46	—		0000H	—	—	—	—	—
PD47	—		0000H	—	—	—	—	—
PD48	—		0000H	—	—	—	—	—

Tab. A-50: *List of I/O setting parameters for MR-J4-TM (2)*

A.6.6 Extension setting 2 parameters (PE□□)

No.	Symbol	Name	Initial value	Unit	Operation mode			
					Standard	Full.	Lin.	DD
PE01	**FCT1	Fully closed loop function selection 1	0000H	—	—	✔	—	—
PE02	—	For manufacturer setting	0000H	—	—	—	—	—
PE03	*FCT2	Fully closed loop function selection 2	0003H	—	—	✔	—	—
PE04	**FBN	Fully closed loop control - Feedback pulse electronic gear 1 - Numerator	1	—	—	✔	—	—
PE05	**FBD	Fully closed loop control - Feedback pulse electronic gear 1 - Denominator	1	—	—	✔	—	—
PE06	BC1	Fully closed loop control - Speed deviation error detection level	400	1/min	—	✔	—	—
PE07	BC2	Fully closed loop control - Position deviation error detection level	100	kpulse	—	✔	—	—
PE08	DUF	Fully closed loop dual feedback filter	10	rad/s	—	✔	—	—
PE09	—	For manufacturer setting	0000H	—	—	—	—	—
PE10	FCT3	Fully closed loop function selection 3	0000H	—	—	✔	—	—
PE11	—	For manufacturer setting	0000H	—	—	—	—	—
PE12	—		0000H	—	—	—	—	—
PE13	—		0000H	—	—	—	—	—
PE14	—		0111H	—	—	—	—	—
PE15	—		20	—	—	—	—	—
PE16	—		0000H	—	—	—	—	—
PE17	—		0000H	—	—	—	—	—
PE18	—		0000H	—	—	—	—	—
PE19	—		0000H	—	—	—	—	—
PE20	—		0000H	—	—	—	—	—
PE21	—		0000H	—	—	—	—	—
PE22	—		0000H	—	—	—	—	—
PE23	—		0000H	—	—	—	—	—
PE24	—		0000H	—	—	—	—	—
PE25	—		0000H	—	—	—	—	—
PE26	—		0000H	—	—	—	—	—
PE27	—		0000H	—	—	—	—	—
PE28	—		0000H	—	—	—	—	—
PE29	—		0000H	—	—	—	—	—
PE30	—		0000H	—	—	—	—	—
PE31	—		0000H	—	—	—	—	—
PE32	—		0000H	—	—	—	—	—
PE33	—		0000H	—	—	—	—	—
PE34	**FBN2	Fully closed loop control - Feedback pulse electronic gear 2 - Numerator	1	—	—	✔	—	—
PE35	**FBD2	Fully closed loop control - Feedback pulse electronic gear 2 - Denominator	1	—	—	✔	—	—
PE36	—	For manufacturer setting	0.0	—	—	—	—	—
PE37	—		0.00	—	—	—	—	—
PE38	—		0.00	—	—	—	—	—
PE39	—		20	—	—	—	—	—
PE40	—		0000H	—	—	—	—	—
PE41	EOP3	Function selection E-3	0000H	—	✔	✔	✔	✔
PE42	—	For manufacturer setting	0	—	—	—	—	—

Tab. A-51: *List of Extension setting 2 parameters for MR-J4-TM (1)*

No.	Symbol	Name	Initial value	Unit	Operation mode			
					Standard	Full.	Lin.	DD
PE43	—	For manufacturer setting	0.0	—	—	—	—	—
PE44	LMCP	Lost motion compensation positive-side compensation value selection	0	0.01%	✔	✔	✔	✔
PE45	LMCN	Lost motion compensation negative-side compensation value selection	0	0.01%	✔	✔	✔	✔
PE46	LMFLT	Lost motion filter setting	0	0.1 ms	✔	✔	✔	✔
PE47	TOF	Torque offset	0	0.01%	✔	✔	—	—
PE48	*LMOP	Lost motion compensation function selection	0000H	—	✔	✔	✔	✔
PE49	LMCD	Lost motion compensation timing	0	0.1 ms	✔	✔	✔	✔
PE50	LMCT	Lost motion compensation non-sensitive band	0	pulse kpulse	✔	✔	✔	✔
PE51	—	For manufacturer setting	0000H	—	—	—	—	—
PE52	—		0000H	—	—	—	—	—
PE53	—		0000H	—	—	—	—	—
PE54	—		0000H	—	—	—	—	—
PE55	—		0000H	—	—	—	—	—
PE56	—		0000H	—	—	—	—	—
PE57	—		0000H	—	—	—	—	—
PE58	—		0000H	—	—	—	—	—
PE59	—		0000H	—	—	—	—	—
PE60	—		0000H	—	—	—	—	—
PE61	—		0.00	—	—	—	—	—
PE62	—		0.00	—	—	—	—	—
PE63	—		0.00	—	—	—	—	—
PE64	—		0.00	—	—	—	—	—

Tab. A-51: *List of Extension setting 2 parameters for MR-J4-TM (2)*

A.6.7 Extension setting 3 parameters (PF□□)

No.	Symbol	Name	Initial value	Unit	Operation mode			
					Standard	Full.	Lin.	DD
PF01	—	For manufacturer setting	0000H	—	—	—	—	—
PF02	—		0000H	—	—	—	—	—
PF03	—		0000H	—	—	—	—	—
PF04	—		0	—	—	—	—	—
PF05	—		0000H	—	—	—	—	—
PF06	*FOP5	Function selection F-5	0000H	—	✔	✔	—	—
PF07	—	For manufacturer setting	0000H	—	—	—	—	—
PF08	—		0000H	—	—	—	—	—
PF09	—		0	—	—	—	—	—
PF10	—		0	—	—	—	—	—
PF11	—		0	—	—	—	—	—
PF12	DBT	Electronic dynamic brake operating time	2000	ms	✔	✔	—	—
PF13	—	For manufacturer setting	0000H	—	—	—	—	—
PF14	—		10	—	—	—	—	—
PF15	—		0000H	—	—	—	—	—
PF16	—		0000H	—	—	—	—	—
PF17	—		0000H	—	—	—	—	—
PF18	**STOD	STO diagnosis error detection time	10	s	✔	✔	✔	✔
PF19	—	For manufacturer setting	0000H	—	—	—	—	—
PF20	—		0000H	—	—	—	—	—
PF21	DRT	Drive recorder switching time setting	0	s	✔	✔	✔	✔
PF22	—	For manufacturer setting	200	—	—	—	—	—
PF23	OSCL1	Vibration tough drive - Oscillation detection level	50	%	✔	✔	✔	✔
PF24	*OSCL2	Vibration tough drive function selection	0000H	—	✔	✔	✔	✔
PF25	CVAT	SEMI-F47 function - Instantaneous power failure detection time	200	ms	✔	✔	✔	✔
PF26	—	For manufacturer setting	0	—	—	—	—	—
PF27	—		0	—	—	—	—	—
PF28	—		0	—	—	—	—	—
PF29	—		0000H	—	—	—	—	—
PF30	—		0	—	—	—	—	—
PF31	FRIC	Machine diagnosis function - Friction judgement speed	0	1/min mm/s	✔	✔	✔	✔
PF32	—	For manufacturer setting	50	—	—	—	—	—
PF33	—		0000H	—	—	—	—	—
PF34	—		0000H	—	—	—	—	—
PF35	—		0000H	—	—	—	—	—
PF36	—		0000H	—	—	—	—	—
PF37	—		0000H	—	—	—	—	—
PF38	—		0000H	—	—	—	—	—
PF39	—		0000H	—	—	—	—	—
PF40	—		0000H	—	—	—	—	—
PF41	—		0000H	—	—	—	—	—

Tab. A-52: *List of Extension setting 3 parameters for MR-J4-TM (1)*

No.	Symbol	Name	Initial value	Unit	Operation mode			
					Standard	Full.	Lin.	DD
PF42	—	For manufacturer setting	0000H	—	—	—	—	—
PF43	—		0000H	—	—	—	—	—
PF44	—		0	—	—	—	—	—
PF45	—		0000H	—	—	—	—	—
PF46	—		0000H	—	—	—	—	—
PF47	—		0000H	—	—	—	—	—
PF48	—		0000H	—	—	—	—	—
PF49	—		100	—	—	—	—	—
PF50	—		100	—	—	—	—	—
PF51	—		0000H	—	—	—	—	—
PF52	—		0000H	—	—	—	—	—
PF53	—		0	—	—	—	—	—
PF54	—		0	—	—	—	—	—
PF55	—		0	—	—	—	—	—
PF56	—		0	—	—	—	—	—
PF57	—		0000H	—	—	—	—	—
PF58	—		0000H	—	—	—	—	—
PF59	—		0000H	—	—	—	—	—
PF60	—		0000H	—	—	—	—	—
PF61	—		0000H	—	—	—	—	—
PF62	—		0000H	—	—	—	—	—
PF63	—		0000H	—	—	—	—	—
PF64	—		0000H	—	—	—	—	—

Tab. A-52: *List of Extension setting 3 parameters for MR-J4-TM (2)*

A.6.8 Linear servo motor/DD motor setting parameters (PL□□)

No.	Symbol	Name	Initial value	Unit	Operation mode			
					Standard	Full.	Lin.	DD
PL01	**LIT1	Linear servo motor/DD motor function selection 1	0301H	—	—	—	✔	✔
PL02	**LIM	Linear encoder resolution - Numerator	1000	µm	—	—	✔	—
PL03	**LID	Linear encoder resolution - Denominator	1000	µm	—	—	✔	—
PL04	*LIT2	Linear servo motor/DD motor function selection 2	0003H	—	—	—	✔	✔
PL05	LB1	Position deviation error detection level	0	mm 0.01 rev	—	—	✔	✔
PL06	LB2	Speed deviation error detection level	0	mm/s 1/min	—	—	✔	✔
PL07	LB3	Torque/thrust deviation error detection level	100	%	—	—	✔	✔
PL08	*LIT3	Linear servo motor/DD motor function selection 3	0010H	—	—	—	✔	✔
PL09	LPWM	Magnetic pole detection voltage level	30	%	—	—	✔	✔
PL10	—	For manufacturer setting	5	—	—	—	—	—
PL11	—		100	—	—	—	—	—
PL12	—		500	—	—	—	—	—
PL13	—		0000H	—	—	—	—	—
PL14	—		0000H	—	—	—	—	—
PL15	—		20	—	—	—	—	—
PL16	—		0	—	—	—	—	—
PL17	LTSTS	Magnetic pole detection - Minute position detection method - Function selection	0000H	—	—	—	✔	✔
PL18	IDLV	Magnetic pole detection - Minute position detection method - Identification signal amplitude	0	%	—	—	✔	✔
PL19	—	For manufacturer setting	0	—	—	—	—	—
PL20	—		0	—	—	—	—	—
PL21	—		0	—	—	—	—	—
PL22	—		0	—	—	—	—	—
PL23	—		0000H	—	—	—	—	—
PL24	—		0	—	—	—	—	—
PL25	—		0000H	—	—	—	—	—
PL26	—		0000H	—	—	—	—	—
PL27	—		0000H	—	—	—	—	—
PL28	—		0000H	—	—	—	—	—
PL29	—		0000H	—	—	—	—	—
PL30	—		0000H	—	—	—	—	—
PL31	—		0000H	—	—	—	—	—
PL32	—		0000H	—	—	—	—	—
PL33	—		0000H	—	—	—	—	—
PL34	—		0000H	—	—	—	—	—
PL35	—		0000H	—	—	—	—	—
PL36	—		0000H	—	—	—	—	—
PL37	—		0000H	—	—	—	—	—
PL38	—		0000H	—	—	—	—	—
PL39	—		0000H	—	—	—	—	—
PL40	—		0000H	—	—	—	—	—

Tab. A-53: *List of linear servo motor/DD motor setting parameters for MR-J4-TM (1)*

No.	Symbol	Name	Initial value	Unit	Operation mode			
					Standard	Full.	Lin.	DD
PL41	—	For manufacturer setting	0000H	—	—	—	—	—
PL42	—		0000H	—	—	—	—	—
PL43	—		0000H	—	—	—	—	—
PL44	—		0000H	—	—	—	—	—
PL45	—		0000H	—	—	—	—	—
PL46	—		0000H	—	—	—	—	—
PL47	—		0000H	—	—	—	—	—
PL48	—		0000H	—	—	—	—	—

Tab. A-53: *List of linear servo motor/DD motor setting parameters for MR-J4-TM (2)*

A.6.9 Positioning control parameters (Pr. PT□□)

No.	Symbol	Name	Initial value	Unit	Operation mode			
					Standard	Full.	Lin.	DD
PT01	**CTY	Command mode selection	0300H	—	✔	✔	✔	✔
PT02	—	For manufacturer setting	0001H	—	—	—	—	—
PT03	*FTY	Feeding function selection	0000H	—	✔	—	—	✔
PT04	—	For manufacturer setting	0000H	—	—	—	—	—
PT05	ZRF	Home position return speed	100.00	1/min mm/s	✔	✔	✔	✔
PT06	CRF	Creep speed	10.00	1/min mm/s	✔	✔	✔	✔
PT07	ZST	Home position shift distance	0	10^{-3} degree pulse	✔	✔	✔	✔
PT08	—	For manufacturer setting	0	—	—	—	—	—
PT09	DCT	Travel distance after proximity dog	0	10^{-3} degree pulse	✔	✔	✔	✔
PT10	ZTM	Stopper type home position return stopper time	100	ms	✔	✔	✔	✔
PT11	ZTT	Stopper type home position return torque limit value	15.0	%	✔	✔	✔	✔
PT12	—	For manufacturer setting	0	—	—	—	—	—
PT13	—		100	—	—	—	—	—
PT14	—		0	—	—	—	—	—
PT15	LMPL	Software limit +	0000H	10^{-3} degree pulse	✔	✔	✔	✔
PT16	LMPH		0000H	—	✔	✔	✔	✔
PT17	LMNL	Software limit -	0000H	10^{-3} degree pulse	✔	✔	✔	✔
PT18	LMNH		0000H	—	✔	✔	✔	✔
PT19	—	For manufacturer setting	0000H	—	—	—	—	—
PT20	—		0000H	—	—	—	—	—
PT21	—		0000H	—	—	—	—	—
PT22	—		0000H	—	—	—	—	—
PT23	—		0	—	—	—	—	—
PT24	—		0	—	—	—	—	—
PT25	—		0	—	—	—	—	—
PT26	*TOP2	Function selection T-2	0000H	—	✔	✔	✔	✔
PT27	—	For manufacturer setting	0000H	—	—	—	—	—
PT28	—		8	—	—	—	—	—
PT29	*TOP3	Function selection T-3	0000H	—	✔	✔	✔	✔
PT30	—	For manufacturer setting	0000H	—	—	—	—	—
PT31	—		0000H	—	—	—	—	—
PT32	—		0000H	—	—	—	—	—
PT33	—		0000H	—	—	—	—	—
PT34	—		0000H	—	—	—	—	—
PT35	*TOP5	Function selection T-5	0000H	—	✔	—	—	—
PT36	—	For manufacturer setting	0000H	—	—	—	—	—
PT37	—		10	—	—	—	—	—
PT38	—		0000H	—	—	—	—	—

Tab. A-54: *List of positioning control parameters for MR-J4-TM (1)*

No.	Symbol	Name	Initial value	Unit	Operation mode			
					Standard	Full.	Lin.	DD
PT39	—	For manufacturer setting	100	—	—	—	—	—
PT40	—		0	—	—	—	—	—
PT41	ORP	Home position return inhibit function selection	0000H	—	✔	✔	✔	✔
PT42	—	For manufacturer setting	0	—	—	—	—	—
PT43	—		0	—	—	—	—	—
PT44	—		0000H	—	—	—	—	—
PT45	HMM	Home position return type	37	—	✔	✔	✔	✔
PT46	ESTC	Synchronous encoder filter time constant	0	ms	✔	—	—	—
PT47	—	For manufacturer setting	0000H	—	—	—	—	—
PT48	—		0000H	—	—	—	—	—
PT49	STA	Acceleration time constant	0	ms	✔	—	—	—
PT50	STB	Deceleration time constant	0	ms	✔	—	—	—
PT51	STC	S-pattern acceleration/deceleration time constant	0	ms	✔	—	—	—
PT52	—	For manufacturer setting	0	—	—	—	—	—
PT53	TQS	Torque slope	0.0	%/s	✔	✔	✔	✔
PT54	—	For manufacturer setting	0	—	—	—	—	—
PT55	*TOP8	Function selection T-8	0000H	—	✔	—	✔	✔
PT56	HMA	Home position return acceleration time constant	0	ms	✔	—	✔	✔
PT57	HMB	Home position return deceleration time constant	0	ms	✔	—	✔	✔
PT58	—	For manufacturer setting	100.00	—	—	—	—	—
PT59	—		500.00	—	—	—	—	—
PT60	—		1000.00	—	—	—	—	—
PT61	—		200.00	—	—	—	—	—
PT62	—		0000H	—	—	—	—	—
PT63	—		0000H	—	—	—	—	—
PT64	—		0000H	—	—	—	—	—
PT65	PVC	Profile speed command	100.00	1/min mm/s	✔	✔	✔	✔
PT66	MPVC	Maximum profile speed	20000.00	1/min mm/s	✔	✔	✔	✔
PT67	VLMT	Speed limit	500.00	1/min mm/s	✔	✔	✔	✔
PT68	—	For manufacturer setting	0102H	—	—	—	—	—
PT69	ZSTH	Home position shift distance (extension parameter)	0	10^{-3} degree pulse	✔	✔	✔	✔
PT70	—	For manufacturer setting	0000H	—	—	—	—	—
PT71	DCTH	Travel distance after proximity dog (extension parameter)	0	10^{-3} degree pulse	✔	✔	✔	✔
PT72	ECMXL	Synchronous encoder electronic gear - Numerator	0000H	—	✔	—	—	—
PT73	ECMXH		0000H	—	✔	—	—	—
PT74	ECDVL	Synchronous encoder electronic gear - Denominator	0000H	—	✔	—	—	—
PT75	ECDVH		0000H	—	✔	—	—	—

Tab. A-54: *List of positioning control parameters for MR-J4-TM (2)*

No.	Symbol	Name	Initial value	Unit	Operation mode			
					Standard	Full.	Lin.	DD
PT76	—	For manufacturer setting	0000H	—	—	—	—	—
PT77	—		0000H	—	—	—	—	—
PT78	—		0000H	—	—	—	—	—
PT79	—		0000H	—	—	—	—	—
PT80	—		0000H	—	—	—	—	—

Tab. A-54: *List of positioning control parameters for MR-J4-TM (3)*

NOTE

The fractional portion of the value in each of the following parameters will be rounded down. If a value smaller than 1 /min is set in either of them, the servo motor may not rotate.

- Pr. PT05 (Home position return speed
- Pr. PT06 (Creep speed)
- Pr. PT65 (Profile speed command)

A.6.10 Network setting parameters (Pr. PN□□)

No.	Symbol	Name	Initial value	Unit	Operation mode			
					Standard	Full.	Lin.	DD
PN01	**NADR	Node address setting	0000H	—	✔	✔	✔	✔
PN02	—	For manufacturer setting	0	—	—	—	—	—
PN03	—		0000H	—	—	—	—	—
PN04	—		0000H	—	—	—	—	—
PN05	—		0000H	—	—	—	—	—
PN06	—		0000H	—	—	—	—	—
PN07	—		0000H	—	—	—	—	—
PN08	—		0000H	—	—	—	—	—
PN09	—		0000H	—	—	—	—	—
PN10	—		0000H	—	—	—	—	—
PN11	—		0000H	—	—	—	—	—
PN12	—		0000H	—	—	—	—	—
PN13	—		0000H	—	—	—	—	—
PN14	—		0000H	—	—	—	—	—
PN15	—		0000H	—	—	—	—	—
PN16	—		0000H	—	—	—	—	—
PN17	—		0000H	—	—	—	—	—
PN18	—		0000H	—	—	—	—	—
PN19	—		0000H	—	—	—	—	—
PN20	—		0000H	—	—	—	—	—
PN21	—		0000H	—	—	—	—	—
PN22	—		0000H	—	—	—	—	—
PN23	—		0000H	—	—	—	—	—
PN24	—		0000H	—	—	—	—	—
PN25	—		0000H	—	—	—	—	—
PN26	—		0000H	—	—	—	—	—
PN27	—		0000H	—	—	—	—	—
PN28	—		0000H	—	—	—	—	—
PN29	—		0000H	—	—	—	—	—
PN30	—		0000H	—	—	—	—	—
PN31	—		0000H	—	—	—	—	—
PN32	—		0000H	—	—	—	—	—

Tab. A-55: *List of network setting parameters for MR-J4-TM*

NOTES

EtherNet/IP is available with servo amplifiers with software version B0 or later.

PROFINET is available with servo amplifiers with software version B1 or later.

The parameter whose symbol is preceded by * is enabled with the following conditions:

- *: After setting the parameter, cycle the power or reset the controller.
- **: After setting the parameter, cycle the power.

Abbreviations of operation modes indicate the followings.

- Standard: Standard (semi closed loop system) use of the rotary servo motor
- Full.: Fully closed loop system use of the rotary servo motor
- Lin.: Linear servo motor use
- DD: Direct drive (DD) motor use

Index

A

B

C

D

E

F

I

J

L

M

N

P

R

S

U

W

HEADQUARTERS

Mitsubishi Electric Europe B.V. **EUROPE**
Mitsubishi-Electric-Platz 1
D-40882 Ratingen
Phone: +49 (0)2102 / 486-0
Fax: +49 (0)2102 / 486-1120

Mitsubishi Electric Europe B.V. **CZECH REP.**
Pekařská 621/7
CZ-155 00 Praha 5
Phone: +420 255 719 200
Fax: +420 251 551 471

Mitsubishi Electric Europe B.V. **FRANCE**
25, Boulevard des Bouvets
F-92741 Nanterre Cedex
Phone: +33 (0)1 / 55 68 55 68
Fax: +33 (0)1 / 55 68 57 57

Mitsubishi Electric Europe B.V. **IRELAND**
Westgate Business Park, Ballymount
IRL-Dublin 24
Phone: +353 (0)1 4198800
Fax: +353 (0)1 4198890

Mitsubishi Electric Europe B.V. **ITALY**
Viale Colleoni 7 Palazzo Sirio
I-20864 Agrate Brianza (MB)
Phone: +39 039 / 60 53 1
Fax: +39 039 / 60 53 312

Mitsubishi Electric Europe B.V. **NETHERLANDS**
Nijverheidsweg 23C
NL-3641RP Mijdrecht
Phone: +31 (0) 297 250 350

Mitsubishi Electric Europe B.V. **POLAND**
ul. Krakowska 48
PL-32-083 Balice
Phone: +48 (0) 12 347 65 00
Fax: +48 (0) 12 630 47 01

Mitsubishi Electric (Russia) LLC **RUSSIA**
2 bld. 1, Letnikovskaya st.
RU-115114 Moscow
Phone: +7 495 / 721 2070
Fax: +7 495 / 721 2071

Mitsubishi Electric Europe B.V. **SPAIN**
Carretera de Rubí 76-80 Apdo. 420
E-08190 Sant Cugat del Vallés (Barcelona)
Phone: +34 (0) 93 / 5653131
Fax: +34 (0) 93 / 5891579

Mitsubishi Electric Europe B.V. (Scandinavia) **SWEDEN**
Hedvig Möllers gata 6
SE-223 55 Lund
Phone: +46 (0) 8 625 10 00

Mitsubishi Electric Turkey Elektrik Ürünleri A.Ş. **TURKEY**
Fabrika Otomasyonu Merkezi
Şerifali Mahallesi Kale Sokak No:41
TR-34775 Ümraniye-İSTANBUL
Phone: +90 (216) 969 25 00
Fax: +90 (0)216 / 661 44 47

Mitsubishi Electric Europe B.V. **UK**
Travellers Lane
UK-Hatfield, Herts. AL10 8XB
Phone: +44 (0)1707 / 28 87 80
Fax: +44 (0)1707 / 27 86 95

Mitsubishi Electric Corporation **JAPAN**
Tokyo Building 2-7-3
Marunouchi, Chiyoda-ku
Tokyo 100-8310
Phone: +81 (3) 3218-2111
Fax: +81 (3) 3218-2185

Mitsubishi Electric Automation, Inc. **USA**
500 Corporate Woods Parkway
Vernon Hills, IL 60061
Phone: +1 (847) 478-2100
Fax: +1 (847) 478-0328

EUROPEAN REPRESENTATIVES

GEVA **AUSTRIA**
Wiener Straße 89
A-2500 Baden
Phone: +43 (0)2252 / 85 55 20
Fax: +43 (0)2252 / 488 60

OOO TECHNIKON **BELARUS**
Prospect Nezavisimosti 177-9
BY-220125 Minsk
Phone: +375 (0)17 / 393 1177
Fax: +375 (0)17 / 393 0081

INEA RBT d.o.o. **BOSNIA AND HERZEGOVINA**
Stegne 11
SI-1000 Ljubljana
Phone: +386 (0)1/ 513 8116
Fax: +386 (0)1/ 513 8170

AKHNATON **BULGARIA**
4, Andrei Ljapchev Blvd., PO Box 21
BG-1756 Sofia
Phone: +359 (0)2 / 817 6000
Fax: +359 (0)2 / 97 44 06 1

INEA CR **CROATIA**
Losinjska 4 a
HR-10000 Zagreb
Phone: +385 (0)1 / 36 940 - 01/ -02/ -03
Fax: +385 (0)1 / 36 940 - 03

AutoCont C. S. S.R.O. **CZECH REPUBLIC**
Kafkova 1853/3
CZ-702 00 Ostrava 2
Phone: +420 595 691 150
Fax: +420 595 691 199

HANS FØLSGAARD A/S **DENMARK**
Theilgaards Torv 1
DK-4600 Køge
Phone: +45 4320 8600
Fax: +45 4396 8855

Electrobit OÜ **ESTONIA**
Pärnu mnt. 160i
EST-11317, Tallinn
Phone: +372 6518 140

UTU Automation Oy **FINLAND**
Peltotie 37i
FIN-28400 Ulvila
Phone: +358 (0)207 / 463 500
Fax: +358 207 / 463 501

UTECO A.B.E.E. **GREECE**
5, Mavrogenous Str.
GR-18542 Piraeus
Phone: +30 (0)211 / 1206-900
Fax: +30 (0)211 / 1206-999

MELTRADE Kft. **HUNGARY**
Fertő utca 14.
HU-1107 Budapest
Phone: +36 (0)1 / 431-9726
Fax: +36 (0)1 / 431-9727

OAK Integrator Products SIA **LATVIA**
Ritausmas iela 23
LV-1058 Riga
Phone: +371 67842280

Automatikos Centras, UAB **LITHUANIA**
Neries krantiné 14A-101
LT-48397 Kaunas
Phone: +370 37 262707
Fax: +370 37 455605

EUROPEAN REPRESENTATIVES

ALFATRADE Ltd. **MALTA**
99, Paola Hill
Malta-Paola PLA 1702
Phone: +356 (0)21 / 697 816
Fax: +356 (0)21 / 697 817

INTEHSIS SRL **MOLDOVA**
bld. Traian 23/1
MD-2060 Kishinev
Phone: +373 (0)22 / 66 4242
Fax: +373 (0)22 / 66 4280

Fonseca S.A. **PORTUGAL**
R. João Francisco do Casal 87/89
PT-3801-997 Aveiro, Esgueira
Phone: +351 (0)234 / 303 900
Fax: +351 (0)234 / 303 910

SIRIUS TRADING & SERVICES SRL **ROMANIA**
Aleea Lacul Morii Nr. 3
RO-060841 Bucuresti, Sector 6
Phone: +40 (0)21 / 430 40 06
Fax: +40 (0)21 / 430 40 02

INEA SR d.o.o. **SERBIA**
Ul. Karadjordjeva 12/217
SER-11300 Smederevo
Phone: +386 (026) 461 54 01

SIMAP SK (Západné Slovensko) **SLOVAKIA**
Dolné Pažite 603/97
SK-911 06 Trenčín
Phone: +421 (0)32 743 04 72
Fax: +421 (0)32 743 75 20

INEA RBT d.o.o. **SLOVENIA**
Stegne 11
SI-1000 Ljubljana
Phone: +386 (0)1 / 513 8116
Fax: +386 (0)1 / 513 8170

OMNI RAY AG **SWITZERLAND**
Im Schörli 5
CH-8600 Dübendorf
Phone: +41 (0)44 / 802 28 80
Fax: +41 (0)44 / 802 28 28

CSC- AUTOMATION Ltd. **UKRAINE**
4 B, Yevhena Sverstyuka Str.
UA-02002 Kiev
Phone: +380 (0)44 / 494 33 44
Fax: +380 (0)44 / 494-33-66

EURASIAN REPRESENTATIVES

TOO Kazpromavtomatika **KAZAKHSTAN**
UL. ZHAMBYLA 28,
KAZ-100017 Karaganda
Phone: +7 7212 / 50 10 00
Fax: +7 7212 / 50 11 50

MIDDLE EAST REPRESENTATIVE

EIM Energy **EGYPT**
3 Roxy Square
ET-11341 Heliopolis, Cairo
Phone: +202 24552559
Fax: +202 245266116

SHERF Motion Techn. Ltd. **ISRAEL**
Rehov Hamerkava 19
IL-58851 Holon
Phone: +972 (0)3 / 559 54 62
Fax: +972 (0)3 / 556 01 82

CEG LIBAN **LEBANON**
Cebaco Center/Block A Autostrade DORA
Lebanon-Beirut
Phone: +961 (0)1 / 240 445
Fax: +961 (0)1 / 240 193

AFRICAN REPRESENTATIVE

ADROIT TECHNOLOGIES **SOUTH AFRICA**
20 Waterford Office Park 189 Witkoppen Road
ZA-Fourways
Phone: + 27 (0)11 / 658 8100
Fax: + 27 (0)11 / 658 8101