MITSUBISHI ELECTRIC ENGINEERING

Programmable Controller
Upgrade Tool

October 2017 Edition

Programmable Controller Upgrade Tool General Catalog

Upgrade Tool

MELSEC-A Series ⇒ MELSEC-Q Series
MELSEC-AnS Series ⇒ MELSEC-L Series
MELSEC-AnS Series ⇒ MELSEC-Q Series
SYSMAC C Series ⇒ MELSEC-Q Series
New Satellite JW Series ⇒ MELSEC-Q Series
MEMOCON-SC GL Series ⇒ MELSEC-Q Series
Non-Mitsubishi Programmable Controller Series ⇒ MELSEC-Q Series
Upgrade Tool

New Release! Conversion adapters for replacing OMRON or YASKAWA Electric programmable controllers with the MELSEC-Q series programmable controllers!

▶ Section 5 ▶ Section 6

Upgrade Tool

Upgrade Tool (Renewal Tool) Compatible Series

- ☐ MELSEC-A Series ⇒ MELSEC-Q Series
- ☐ MELSEC-AnS Series ⇒ MELSEC-L Series
- ☐ MELSEC-AnS Series ⇒ MELSEC-Q Series
- ☐ SYSMAC C Series ⇒ MELSEC-Q Series
- ☐ New Satellite JW Series ⇒ MELSEC-Q Series
- ☐ MEMOCON-SC GL Series ⇒ MELSEC-Q Series
- ☐ Non-Mitsubishi Programmable Controller ⇒ MELSEC-Q "Universal Conversion Adapter"

The upgrade tool allows you to use your existing wiring (including terminal blocks/connectors) as is, achieving a significant reduction in transition work time as well as a signification decrease in wiring errors. (some connection changes required)

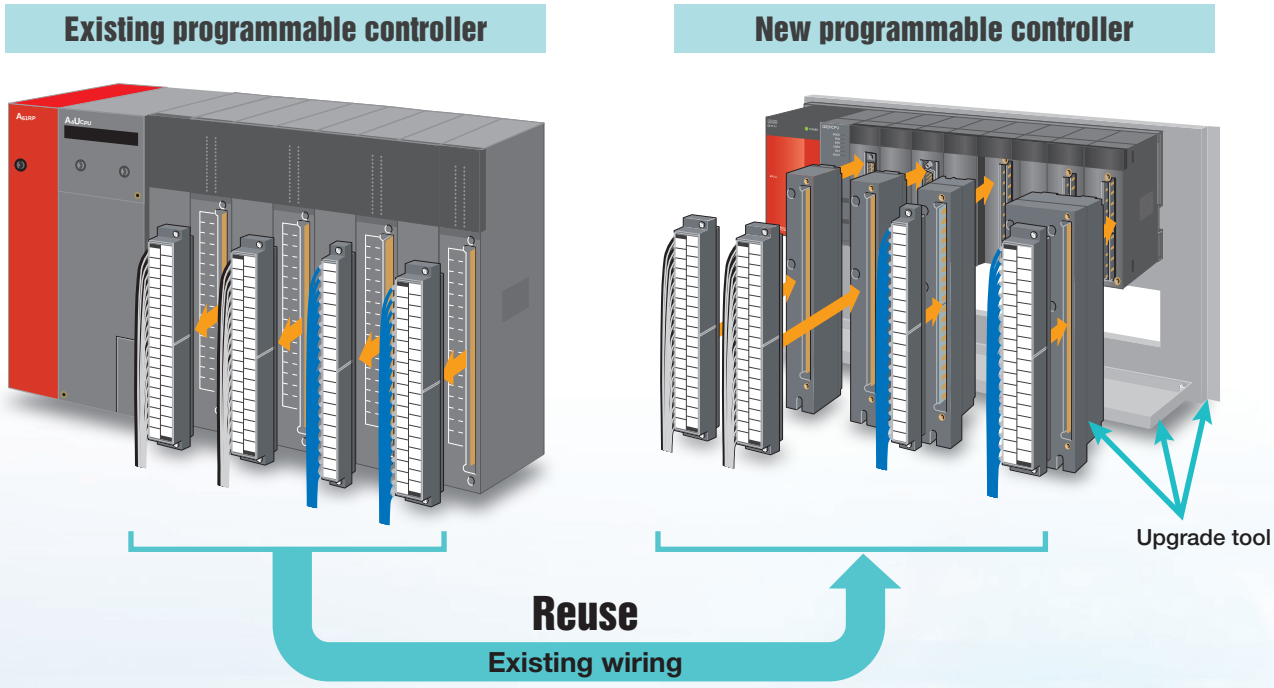

The MELSEC-A/AnS series sequence program can be simply replaced using GX Developer and the A/QnA→Q conversion support tool, and the SYSMAC C series sequence program can be simply replaced using a program converter.

All company and product names herein are either trademarks or registered taradmarks of their respective owners.

A Q series Product name: MELSEC-A Series ⇨MELSEC-Q Series Upgrade Tool

Upgrading from the MELSEC-A Series to the MELSEC-Q Series

- Simplifies replacement with the MELSEC-Q series
- Significantly shortens the time required for input, output, analog, and high-speed counter module wiring, and significantly reduces wiring errors
- Permits reuse of sequence programs

Section 1

AnS L series Product name: MELSEC-AnS Series ⇨MELSEC-L Series Upgrade Tool

Upgrading from the MELSEC-AnS Series to the MELSEC-L Series

- Simplifies replacement with the MELSEC-L series
- Significantly shortens the time required for input, output, analog and high-speed counter module wiring, and significantly reduces wiring errors
- Permits reuse of sequence programs

Section 2

AnS Q series Product name: MELSEC-AnS Series ⇨MELSEC-Q Series Upgrade Tool

Upgrading from the MELSEC-AnS Series to the MELSEC-Q Series

- Simplifies replacement with the MELSEC-Q series
- Significantly shortens the time required for input, output, analog, high-speed counter, temperature input, and temperature control module wiring, and significantly reduces wiring errors
- Permits reuse of sequence programs

Section 3

C Q series Product name: SYSMAC C Series ⇨MELSEC-Q Series Upgrade Tool

Upgrading from the SYSMAC C Series to the MELSEC-Q Series

- Simplifies replacement with the MELSEC-Q series
- Significantly shortens the time required for input and output module wiring, and significantly reduces wiring errors

Section 4

JW Q series Product name: New Satellite JW Series ⇨MELSEC-Q Series Upgrade Tool

Upgrading from the New Satellite JW Series to the MELSEC-Q Series

- Simplifies replacement with the MELSEC-Q series
- Significantly shortens the time required for input and output module wiring, and significantly reduces wiring errors

Section 5

GL Q series Product name: MEMOCON-SC GL Series ⇨MELSEC-Q Series Upgrade Tool

Upgrading from the MEMOCON-SC GL Series to the MELSEC-Q Series

- Simplifies replacement with the MELSEC-Q series
- Significantly shortens the time required for input and output module wiring, and significantly reduces wiring errors

Section 6

Non-Mitsubishi Q series Product name: Non-Mitsubishi Programmable Controller⇨MELSEC-Q Series Upgrade Tool "Universal Conversion Adapter"

Upgrading from a non-Mitsubishi programmable controller to the MELSEC-Q series

- Universal conversion adapter

Section 7

Contents

A Q series

MELSEC-A Series ⇒ MELSEC-Q Series Upgrade Tool

Product Overview 1-1
Model List 1-3
Conversion Adapter 1-6
Specifications 1-6
For Input/Output Modules [1-slot type] 1-6
For Input/Output Modules [2-slot type] 1-12
For Analog Modules [1-slot type] 1-15
For Analog Modules [2-slot type] 1-20
For High-Speed Counter Modules [1-slot type] 1-25
Base Adapter 1-27
Specifications 1-27
Mounting Dimensions 1-27
When Not Using a Base Adapter 1-28
Conversion Adapter Support Flange 1-29
Specifications 1-29
Usage Precautions 1-30
Module Width 1-30
Depth 1-31
Conversion Adapter Support Flange / Base Adapter 1-31
Slot Positions 1-32
External Dimensions 1-34
Conversion Adapter 1-34
Base Adapter 1-37
Conversion Adapter Support Flange 1-37

AnS L series

MELSEC-AnS Series ⇒ MELSEC-L Series Upgrade Tool

Product Overview 2-1
Selecting the Installation Method During Replacement 2-3
Model List 2-5
Conversion Adapter 2-7
Specifications 2-7
For Input/Output Modules [1-module type] 2-7
For Analog Modules [1-module type] 2-12
For High-Speed Counter Modules [1-module type] 2-14
Base Adapter 2-18
Specifications 2-18
Mounting Dimensions 2-18
Usage Precautions 2-19
Module Width 2-19
Depth / Height 2-20
Terminal Block Cover 2-21
External Dimensions 2-22
Conversion Adapter 2-22
Base Adapter 2-24

AnS Q series

MELSEC-AnS Series ⇒ MELSEC-Q Series Upgrade Tool

Product Overview 3-1
Model List 3-5
Conversion Adapter 3-8
Specifications 3-8
For Input/Output Modules [1-slot type] 3-8
For Input/Output Modules [2-slot type] 3-12
For Analog Modules [1-slot type] 3-15
For High-Speed Counter Modules [1-slot type] 3-21

For Temperature Input Modules [1-slot type] 3-30
For Temperature Control Modules [1-slot type] 3-33
For Temperature Control Modules with Disconnection Detection Function [1-slot type + Disconnection detection connector conversion cable] 3-39
Base Adapter 3-47
Specifications 3-47
Mounting Dimensions 3-47
Conversion Adapter DIN Rail Mounting Bracket 3-49
Specifications 3-49
Mounting Dimensions 3-49
Usage Precautions 3-50
Module Width 3-50
Depth / Height 3-51
Terminal Block Cover 3-53
Base Adapter / Conversion Adapter DIN Rail Mounting Bracket 3-53
Slot Positions 3-53
External Dimensions 3-57
Conversion Adapter 3-57
Base Adapter 3-61
Conversion Adapter DIN Rail Mounting Bracket 3-63

C Q series

SYSMAC C Series ⇒ MELSEC-Q Series Upgrade Tool

Product Overview 4-1
Model List 4-2
Conversion Adapter 4-3
Specifications 4-3
[1-slot type] 4-3
[2-slot type] 4-11
Base Adapter 4-13
Specifications 4-13
Mounting Dimensions 4-13
When Not Using a Base Adapter 4-14
Conversion Adapter Support Flange 4-15
Specifications 4-15
Usage Precautions 4-16
Module Width 4-16
Depth 4-16
Conversion Adapter Support Flange / Base Adapter 4-17
Slot Positions 4-18
External Dimensions 4-20
Conversion Adapter 4-20
Base Adapter 4-24
Conversion Adapter Support Flange 4-25

Contents

JW Q series

New Satellite JW Series ⇒ MELSEC-Q Series Upgrade Tool

<JW series large type (JW50H/70H/100H)>
Product Overview 5-1
Model List 5-3
Conversion Adapter 5-5
Specifications 5-5
For Input/Output Modules <1-slot type> 5-5
For Input/Output Modules <2-slot type> 5-10
Conversion Adapter Support Flange 5-12
Specifications 5-12
Upgrading Using the Base Adapter or the Q Series Large Type Base Unit 5-13
Base Adapter 5-15
Specifications 5-15
Mounting Dimensions 5-16
Comparison of External Dimensions and Mounting Hole Dimensions for Replacements 5-17
<When using a main base unit> 5-17
<When using an extension base unit> 5-18
Slot Positions 5-19
<When using a main base unit> 5-19
<When using an extension base unit> 5-21
Usage Precautions 5-24
Module Width 5-24
Depth 5-25
Check for Interference with Adjacent Modules 5-26
Conversion Adapter Support Flange / Base Adapter 5-26
External Dimensions 5-27
Conversion Adapter 5-27

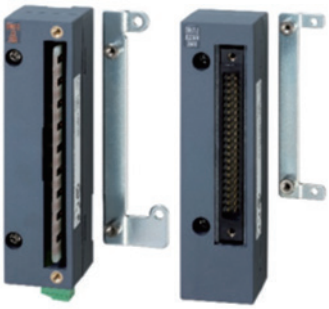

<JW series small type (JW300/30H/20H)>
Product Overview 5-31
Mitsubishi Electric AnS-size Q Series Large Type Base Unit (Recommended) 5-31
Model List 5-33
Conversion Adapter 5-34
Specifications 5-34
For Input/Output Modules <1-slot type> 5-34
MITSUBISHI ELECTRIC CORPORATION Base Unit 5-39
Mounting Dimensions 5-39
Comparison of External Dimensions and Mounting Hole Dimensions for Replacements 5-40
Slot Positions 5-41
<When using a main base unit> 5-41
<When using an extension base unit> 5-43
Usage Precautions 5-45
Module Width 5-45
Depth 5-46
Check for Interference with Adjacent Modules 5-46
External Dimensions 5-47
Conversion Adapter 5-47

GL Q series

MEMOCON-SC GL Series ⇒ MELSEC-Q Series Upgrade Tool

Product Overview 6-1
Model List 6-3
Conversion Adapter 6-5
Specifications 6-5
For Input/Output Modules <1-slot type> 6-5
For Input/Output Modules <2-slot type> 6-11
Conversion Adapter Support Flange 6-13
Specifications 6-13
Upgrading Using the Base Adapter or the Q Series Large Type Base Unit 6-15
Base Adapter 6-17
Specifications 6-17
Mounting Dimensions 6-18
Comparison of External Dimensions and Mounting Hole Dimensions for Replacements .. 6-19
<When using a main base unit> 6-19
<When using an extension base unit> 6-20
Slot Positions 6-21
<When using a main base unit> 6-21
<When using an extension base unit> 6-25
Usage Precautions 6-28
Module Width 6-28
Depth 6-29
Check for Interference with Adjacent Modules 6-30
Conversion Adapter Support Flange / Base Adapter 6-30
External Dimensions 6-31
Conversion Adapter 6-31

Non-Mitsubishi Q series

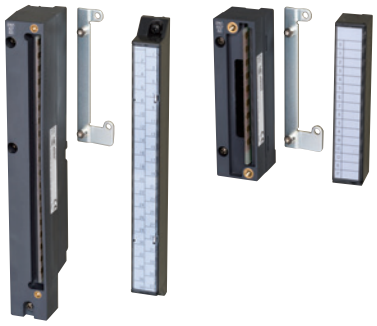

Non-Mitsubishi Programmable Controller ⇒ MELSEC-Q Series Upgrade Tool "Universal Conversion Adapter"

Product Overview 7-1
(Replacing a Non-Mitsubishi Programmable Controller (Large Type) with the MELSEC-Q Series)
Model List 7-13
Universal Conversion Adapter 7-15
Specifications 7-15
Conversion Adapter Support Flange 7-29
Specifications 7-29
When the base adapter is not used 7-29
Base Adapter 7-31
Specifications 7-31
Mounting Dimensions 7-32
Usage Precautions 7-33
Module Width 7-33
Depth 7-34
Conversion Adapter Support Flange / Base Adapter 7-34
Slot Positions 7-35
External Dimensions 7-37
Universal Conversion Adapter 7-37
Base Adapter 7-39
Conversion Adapter Support Flange 7-39
(Replacing a Non-Mitsubishi Programmable Controller (Small Type) with the MELSEC-Q Series)
Model List 7-40
Universal Conversion Adapter 7-41
Specifications 7-41
Usage Precautions 7-48
Module Width 7-48
Depth / Height 7-49
External Dimensions 7-50
Universal Conversion Adapter 7-50

List of Applicable Standards Common-1
Product Configuration Common-5

A Q series MELSEC-A Series ⇨ MELSEC-Q Series Upgrade Tool

Upgrading from the MELSEC-A Series to the MELSEC-Q Series

Simplifies replacement with the MELSEC-Q series
The upgrade tool makes it easy to replace the Mitsubishi Electric programmable controller MELSEC-A series with the MELSEC-Q series.

Significantly shortens the time required for input, output, analog, and high-speed counter module wiring, and significantly reduces wiring errors
- The upgrade tool allows you to connect the wiring connected to the MELSEC-A series input, output, analog, and high-speed counter modules as is to the MELSEC-Q series using a conversion adapter. (Partial changes to power supply and common terminal connections required.)
- By using a base adapter, the MELSEC-Q series can be installed using the MELSEC-A series mounting holes. (Additional drilling of holes is not required.)

Permits reuse of sequence programs
The upgrade tool allows you to change from the MELSEC-A series to the MELSEC-Q series and reuse programs by changing the PLC type in the Mitsubishi Electric programming software GX Developer.

Product Overview

This upgrade tool comprises a “conversion adapter” that changes the existing wiring connected to Mitsubishi Electric programmable controller MELSEC-A series modules to wiring applicable to the modules of the MELSEC-Q series, a “conversion adapter support flange” that fixes the bottom of the conversion adapter in place, and a “base adapter” that makes it possible to install the MELSEC-Q series using the mounting holes of the MELSEC-A series base unit.

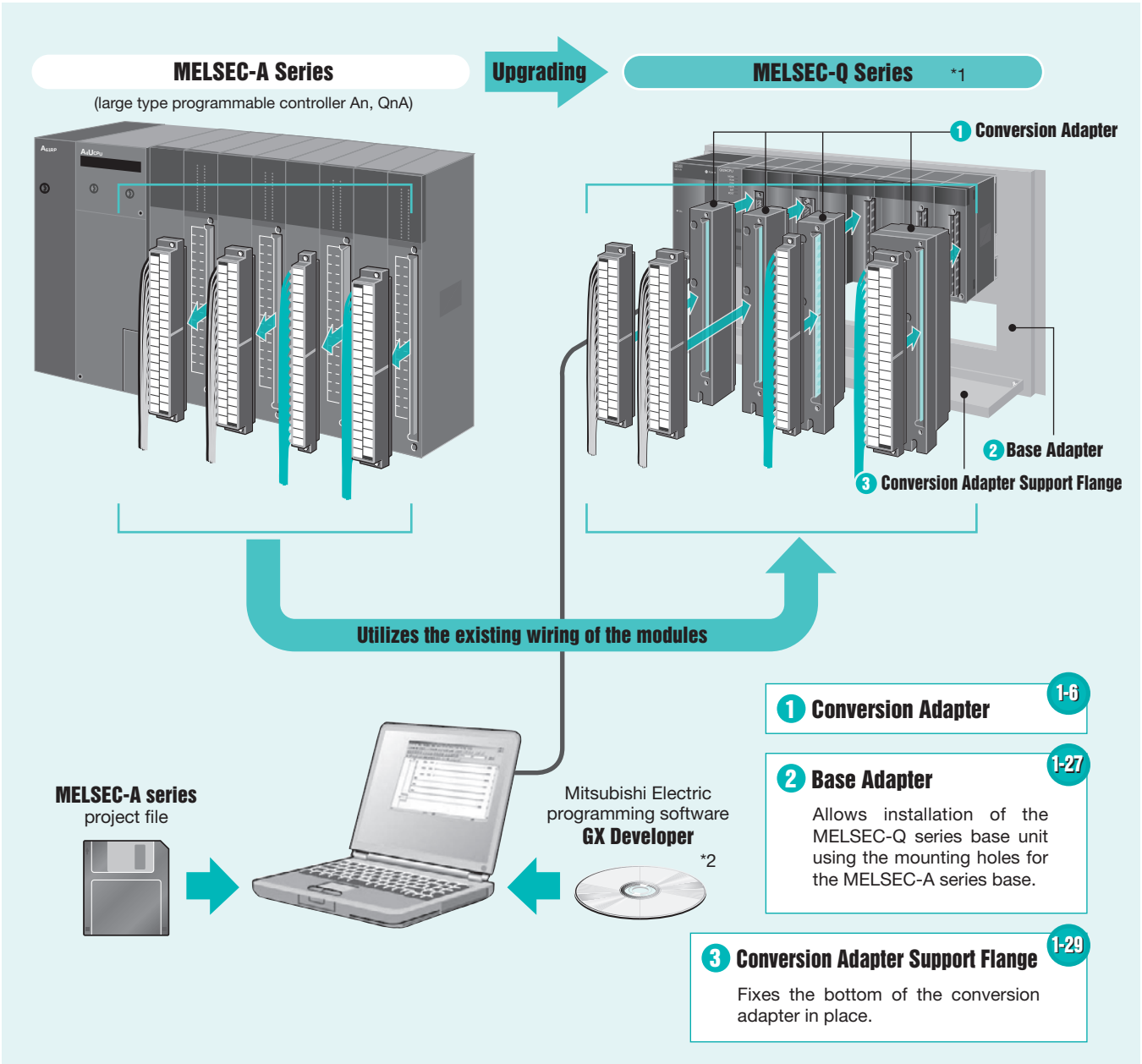

*1: When replacing the MELSEC-A series with the MELSEC-Q series, verification of the mounting is required due to the change in module width and depth dimensions. For details, refer to the “Usage Precautions” (1-30) in this catalog.
*2: Programs can be reused when changing from the MELSEC-A series (existing program) to the MELSEC-Q series by changing the PLC type in the Mitsubishi Electric programming software GX Developer. For details, refer to the GX Developer Operating Manual. Tools that support program replacement with the Q series are also provided by Mitsubishi Electric.

If the wiring interferes with an adjacent module, wiring space can be secured by utilizing the Q series large type base unit.

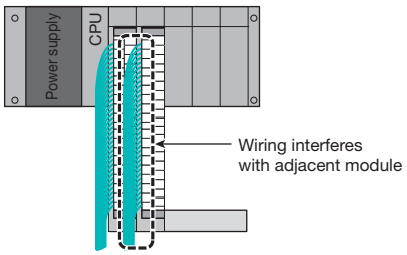

MITSUBISHI ELECTRIC CORPORATION **For MELSEC-A Series (large type) ⇨MELSEC-Q Series**

Upgrading using the Q series large type base unit

The slot width of the Q series large type base unit is the same as the slot width of the MELSEC-A series (large type) base unit, alleviating wiring interference with adjacent modules.

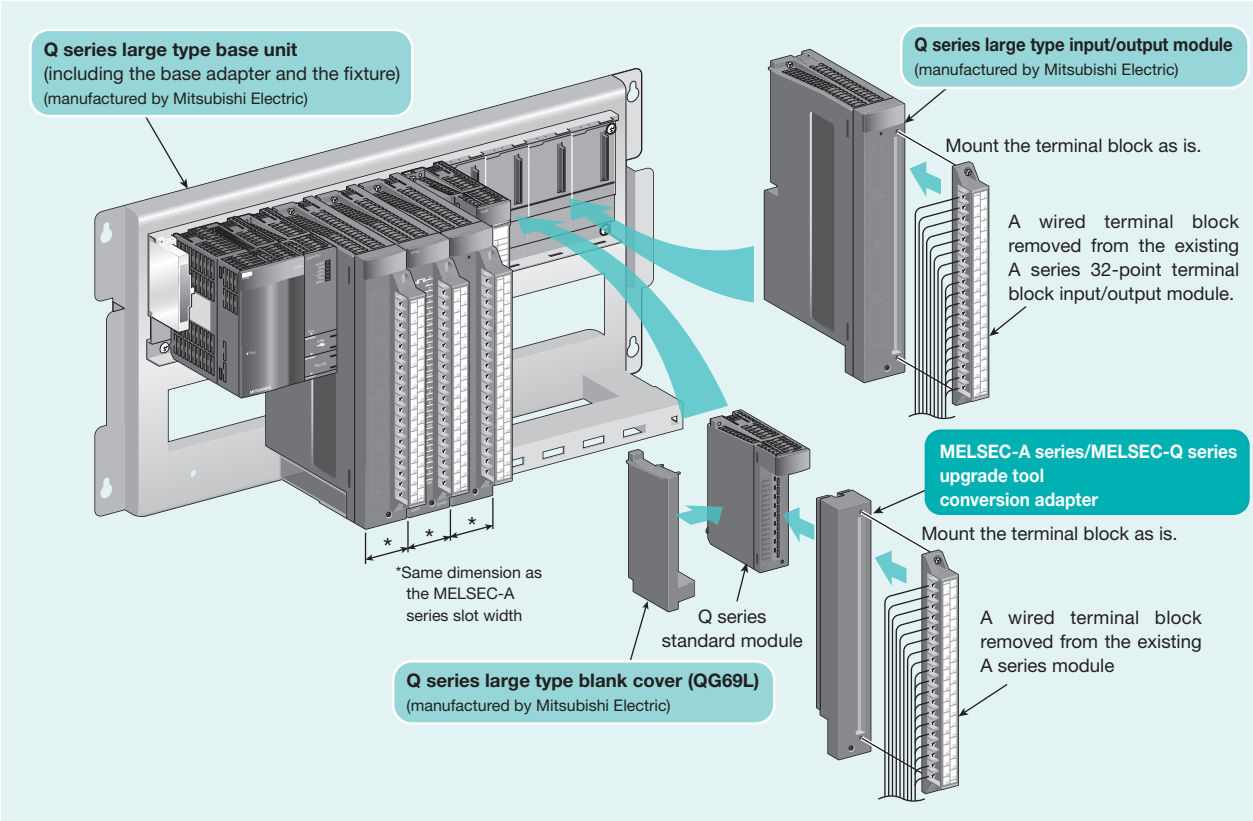

- The installation dimensions of the Q series large type base unit are the same as those of the MELSEC-A large type series. There is no need to drill holes for mounting.
- Can be used together with the Q series large type input/output module.
- The 2-slot type conversion adapter is not applicable.

Point

The Q series large type base unit allows both the Q series standard module that uses the upgrade tool conversion adapter and the Q series large type input/output module to be mounted together, enabling upgrades that utilize the advantages of both modules.

Q Series Large Type Base Unit List

A series model	Q series large type base model
A35B (-E, -UL)	Q35BL
A38B (-E, -UL)	Q38BL
A65B (-UL)	Q65BL
A68B (-UL)	Q68BL
A55B (-UL)	Q55BL

Q Series Large Type Input/Output Module List

A series model	Q series large type module model
AX11	QX11L
AX21	QX21L
AY10A	QY11AL
AY11A (EU)	
AY13 (E, EU)	QY13L
AY23	QY23L
AY41 (P)	QY51PL
AY51 (-S1)	

Q Series Large Type Blank Cover

A series model	Q series large type blank cover model
–	QG69L

Model List

1 Conversion Adapter

When selecting a conversion adapter, be sure to refer to the module specification comparison charts and notes on pages 1-6 to 1-26. These pages indicate precautions such as differences in the number of points per common. For detailed specifications and general specifications not stated in the module specification comparison charts, refer to the user's manual of the corresponding module used. Note that the areas where the specifications differ between the MELSEC-A series and the MELSEC-Q series are restricted in terms of specifications during replacement. Verify the specifications of the connected devices.

For Input/Output Modules

[1-slot type] (Applicable to Mitsubishi Electric Q series large type base units as well)

Input/ Output	MELSEC-A series module model before replacement	MELSEC-Q series module model after replacement	Conversion adapter				Page
			Model	Shape		No. of input/ output points	
				MELSEC-A series	MELSEC-Q series		
Input	AX10, AX10-UL	QX10	**ERNT-AQTX10**	Terminal block (20 points)	Terminal block (18 points)	16 points	**1-6**
	AX40, AX40-UL	QX40, QX70	**ERNT-AQTX40**				**1-6**
		QX40-S1					
	AX70, AX70-UL	QX70					
	AX50	QX50					
	AX50-S1						
	AX80, AX80-UL	QX80	**ERNT-AQTX80**				**1-7**
	AX41, AX41-UL	QX41, QX41-S2 (*3), QX71	**ERNT-AQTX41**	Terminal block (38 points)	FCN connector (40P jack)	32 points	**1-7**
	AX31-S1	QX41, QX41-S2 (*3)					
	AX41-S1	QX41-S1					
	AX71	QX71					
	AX81	QX81, QX81-S2 (*3)	**ERNT-AQTX81**	Terminal block (38 points)	D-sub connector (37P)		**1-8**
	AX81-S1						
Output	AY10	QY10	**ERNT-AQTY10**	Terminal block (20 points)	Terminal block (18 points)	16 points	**1-9**
	AY11, AY11-UL						
	AY11E						
	AY11EEU						
	AY22	QY22	**ERNT-AQTY22**				**1-9**
	AY40, AY40-UL	QY40P	**ERNT-AQTY40**				**1-10**
	AY40P						
	AY70, AY70-UL	QY70					
	AY50, AY50-UL	QY50	**ERNT-AQTY50**				**1-10**
	AY80	QY80	**ERNT-AQTY80**				**1-11**
	AY41, AY41-UL	QY41P	**ERNT-AQTY41**	Terminal block (38 points)	FCN connector (40P jack)	32 points	**1-11**
	AY41P						
	AY71	QY71					
	AY81	QY81P	**ERNT-AQTY81**	Terminal block (38 points)	D-sub connector (37P)		**1-12**
	AY81EP						

*3: The input specifications (such as input derating) may differ from those of the existing product. Be sure to verify the specifications prior to use.

[2-slot type] (Not applicable to Mitsubishi Electric Q series large type base units)

Input/ Output	MELSEC-A series module model before replacement	MELSEC-Q series module model after replacement	Conversion adapter				Page
			Model	Shape		No. of input/ output points	
				MELSEC-A series	MELSEC-Q series		
Input	AX11	QX10 × 2 modules	**ERNT-AQTX11**	Terminal block (38 points)	Terminal block (18 points) × 2	32 points	**1-12**
	AX11EU						
Output	AY10A, AY10A-UL	QY18A × 2 modules	**ERNT-AQTY10A**			16 points	**1-13**
	AY11A						
	AY11AEU						
	AY13	QY10 × 2 modules	**ERNT-AQTY13**			32 points	**1-13**
	AY13E						
	AY13EU						
	AY23	QY22 × 2 modules	**ERNT-AQTY23**				**1-14**
	AY51, AY51-UL	QY50 × 2 modules	**ERNT-AQTY51** (*4)				**1-14**
	AY51-S1						
	AY81	QY80 × 2 modules					
	AY81EP						

*4: The Mitsubishi Electric replacement model for AY81/AY81EP is QY81P. However, due to the difference in rated load current, this conversion adapter can be used if you replace AY81/AY81EP with two QY80 modules.

Note: 1. The input/output modules shown in the table below are not conversion adapter compatible and require rewiring. Be sure to verify that the MELSEC-Q series module specifications satisfy the specifications of connected devices and equipment.

Input/Output	MELSEC-A series input/output module model			MELSEC-Q series input/output module model				Universal conversion adapter
	Model	Specifications	No. of points	Model	Specifications	No. of points	No. of required modules	
Input	AX20 (-UL)	200 to 240VAC	16 points	QX28	100 to 240VAC	8 points	2 modules	(*5)
	AX21 (EU)		32 points	QX28			4 modules	(*5)
	AX80	12/24VDC source type	16 points	QX70	5/12VDC sink/source type	16 points	1 module	(*5)
	AX80E	12/24VDC source type	16 points	QX70	24VDC source type	16 points		
				QX80H				
	AX81	12/24VDC source type	32 points	QX71	5/12VDC sink/source type	32 points	1 module	(*5)
	AX81-S1	12/24VDC sink/source type						
	AX81-S3	12/24VDC source type	32 points	QX82-S1	24VDC source type	64 points		—
	AX82		64 points	QX72	5/12VDC sink/source type			
				QX82	24VDC source type			
	AX31	12/24VDC 12/24VAC	32 points	QX41	24VDC	32 points	1 module	(*5)
				QX71	12VDC			(*5)
Output	AY20EU	100 to 240VAC	16 points	QY22	100-240VAC	16 points	1 module	(*5)
	AY40A	12/24VDC 0.3A independent		QY68A	5-24VDC 2A independent	8 points	2 modules	(*5)
	AY60	24VDC/(12/48V) 2A						
	AY60E							
	AY60EP	12/24VDC 2A						
	AY60S (-UL)	24/48VDC/(12V) 2A						
	AY15EU	240VAC 2A	24 points	QY10	240VAC 2A	16 points		
	AY82EP	12/24VDC source type	64 points	QY82P	12-24VDC source type	64 points	1 module	
Input	AX60 (-S1)	There is no applicable MELSEC-Q series module.						—
	AX81-S2							
	AX81B							
Combined input/output	A42XY							

*5: The universal conversion adapter (see 7-5) can be used for replacement.

2. The input/output modules shown in the table below can use the existing wiring as is. Be sure to verify that the MELSEC-Q series module specifications satisfy the specifications of connected devices and equipment.

Input/Output	MELSEC-A series input/output module model	MELSEC-Q series input/output module model
Input	AX42	QX42 (24VDC)
		QX72 (12VDC)
		QX41-S2 (24VDC) (*7)
	AX42-S1	QX42-S1 (24VDC)
	AX82	QX81-S2 (24VDC) (*7)

Input/Output	MELSEC-A series input/output module model	MELSEC-Q series input/output module model
Output	AY42(-S1/S3/S4) (*6)	QY42P
	AY72	QY71 (*7)
	AY82EP	QY81P (*7)
Combined input/output	AH42	QH42P (24VDC input)
		QX41Y41P (24VDC input)

*6: AY42-S4 requires a partial wiring change.
*7: At the time of replacement, two modules are required.

For Analog Modules

[1-slot type] (Applicable to Mitsubishi Electric Q series large type base units as well)

Input/ Output	MELSEC-A series module model before replacement	MELSEC-Q series module model after replacement	Conversion adapter				Page
			Model	Shape		No. of channels	
				MELSEC-A series	MELSEC-Q series		
Input	A68AD (Voltage input)	Q68ADV	ERNT-AQT68AD	Terminal block (38 points)	Terminal block (18 points)	8 channels	1-15
	A68AD (Current input)	Q68ADI					
	A68AD-S2 (Voltage input)	Q68ADV					
	A68AD-S2 (Current input)	Q68ADI					
	A68ADN (Voltage input)	Q68ADV	ERNT-AQT68ADN			8 channels	1-16
	A68ADN (Current input)	Q68ADI					
Output	A62DA	Q62DAN	ERNT-AQT62DA	Terminal block (20 points)		2 channels	1-17
	A62DA-S1						
	A68DAV	Q68DAVN	ERNT-AQT68DA	Terminal block (38 points)		8 channels	1-18
	A68DAI	Q68DAIN					
	A68DAI-S1						

[2-slot type] (Not applicable to Mitsubishi Electric Q series large type base units)

Input/ Output	MELSEC-A series module model before replacement	MELSEC-Q series module model after replacement	Conversion adapter				Page
			Model	Shape		No. of channels	
				MELSEC-A series	MELSEC-Q series		
Input	A68AD (Voltage/Current mixed input)	Q64AD-GH × 2 modules (*8)	ERNT-AQT68AD-GH	Terminal block (38 points)	Terminal block (18 points) × 2	8 channels	1-20 to 1-21
	A68AD-S2 (Voltage/Current mixed input)						
	A68ADN (Voltage/Current mixed input)						
	A616AD (Voltage input)	Q68ADV × 2 modules	ERNT-AQT616AD			16 channels	1-22
	A616AD (Current input)	Q68ADI × 2 modules					
Output	A616DAV	Q68DAVN × 2 modules	ERNT-AQT616DA			16 channels	1-23
	A616DAI	Q68DAIN × 2 modules					

*8: In a case where A68AD, A68AD-S2 or A68ADN are connected to both voltage input and current input, replace the module with two Q64AD-GH modules capable of switching the voltage input and current input of each channel.

For High-Speed Counter Modules

[1-slot type] (Applicable to Mitsubishi Electric Q series large type base units as well)

Input/ Output	MELSEC-A series module model before replacement	MELSEC-Q series module model after replacement	Conversion adapter				Page
			Model	Shape		No. of channels	
				MELSEC-A series	MELSEC-Q series		
Input	AD61	QD62-H01	**ERNT-AQTD61**	Terminal block (38 points)	Connector (40P)	2 channels	**1-25 to 1-26**
	AD61-S1	QD62-H02					

2 Base Adapter

MELSEC-A series module model before replacement	MELSEC-Q series module model after replacement	Base adapter model	Mountable conversion adapter support flange	Page
A38B、A38HB、A38HBEU	Q312B	**ERNT-AQB38**	Conversion adapter support flanges ERNT-AQF12 and ERNT-AQF8	**1-27 to 1-28**
A38B-UL、A38B-E	Q38B	**ERNT-AQB38**	Conversion adapter support flange ERNT-AQF8	
A68B, A68B-UL	Q612B	**ERNT-AQB68**	Conversion adapter support flanges ERNT-AQF12 and ERNT-AQF8	
	Q68B	**ERNT-AQB68**	Conversion adapter support flange ERNT-AQF8	
A58B, A58B-UL	Q68B(*9)	**ERNT-AQB58**	Conversion adapter support flange ERNT-AQF8	
A35B、A35B-UL、A35B-E	Q38B	**ERNT-AQB35**	Conversion adapter support flanges ERNT-AQF8 and ERNT-AQF5	
	Q35B	**ERNT-AQB35**	Conversion adapter support flange ERNT-AQF5	
A65B, A65B-UL	Q68B	**ERNT-AQB65**	Conversion adapter support flanges ERNT-AQF8 and ERNT-AQF5	
	Q65B, Q55B	**ERNT-AQB65**	Conversion adapter support flange ERNT-AQF5	
A55B, A55B-UL	Q65B, Q55B	**ERNT-AQB55**	Conversion adapter support flange ERNT-AQF5	
A32B、A32B-UL、A32B-E	Q33B	**ERNT-AQB32**	Conversion adapter support flange ERNT-AQF3	
A62B	Q63B, Q52B	**ERNT-AQB62**	Conversion adapter support flange ERNT-AQF3	
A52B	Q52B	**ERNT-AQB52**	Conversion adapter support flange ERNT-AQF3	

*9:The base unit after replacement requires a power supply module.

3 Conversion Adapter Support Flange

Conversion adapter support flange model	Description	Remarks	Page
ERNT-AQF12	12-slot conversion adapter support flange	A conversion adapter support flange is always required with conversion adapter use.	**1-29**
ERNT-AQF8	8-slot conversion adapter support flange		
ERNT-AQF5	5-slot conversion adapter support flange		
ERNT-AQF3	3-slot conversion adapter support flange		

Conversion Adapter

Specifications

For Input/Output Modules

1-slot type (Applicable to Mitsubishi Electric Q series large type base units as well)

1) ERNT-AQTX10 Terminal block (20P)→Terminal block (18P)

Conversion adapter model	MELSEC-A series module model	No. of input points	MELSEC-Q series module model
ERNT-AQTX10	AX10 AX10-UL	16 points	QX10

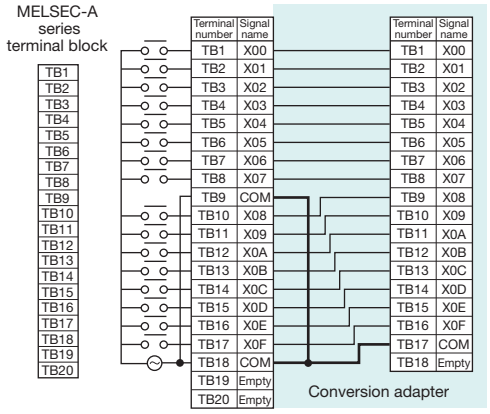

[Input module specification comparison chart]

Specification \ Model	MELSEC-A series		MELSEC-Q series
	AX10	AX10-UL	QX10
No. of input points	16 points		16 points
Isolation method	Photocoupler isolation		Photocoupler isolation
Rated input voltage	100 to 120VAC 50/60Hz	110 to 120VAC 50/60Hz	100 to 120VAC (+10/-15%) 50/60Hz (±3Hz)
Rated input curren	10mA (100VAC, 60Hz)	11mA (110VAC) 12mA (120VAC)	Approx. 8mA (100VAC, 60Hz) Approx. 7mA (100VAC, 50Hz)
Rush current	300mA, maximum, within 0.3ms (132VAC)		200mA, maximum, within 1ms (at 132VAC)
ON voltage / ON current	80VAC or more / 6mA or more		80VAC or more / 5mA or more (50Hz, 60Hz)
OFF voltage / OFF current	40VAC or less / 4mA or less		30VAC or less / 1.7mA or less (50Hz, 60Hz)
Input impedance	Approx. 10kΩ (60Hz), Approx. 12kΩ (50Hz)		Approx. 12kΩ (60Hz), Approx. 15kΩ (50Hz)
Response time OFF→ON	15ms or less		15ms or less (100VAC, 50Hz, 60Hz)
Response time ON→OFF	25ms or less		20ms or less (100VAC, 50Hz, 60Hz)
Internal current consumption	55mA (TYP. all points ON)		50mA (TYP. all points ON)
Wiring method for common	16 points/common		16 points/common
External interface	20-point terminal block		18-point terminal block

Notes
1. For detailed and general specifications not described in the input module specification comparison chart, refer to the user's manual of the input module used. Note that the areas where the specifications differ between the MELSEC-A series and the MELSEC-Q series are restricted in terms of specifications during replacement. Verify the specifications of the connected devices.
2. For ☐ areas, verify that the MELSEC-Q series module specifications satisfy the specifications of the connected device/equipment.

2) ERNT-AQTX40 Terminal block (20P)→Terminal block (18P)

Conversion adapter model	MELSEC-A series module model	No. of input points	MELSEC-Q series module model
ERNT-AQTX40	AX40 AX40-UL	16 points	QX40 QX70
			QX40-S1
	AX70 AX70-UL		QX70
	AX50		QX50
	AX50-S1		

[Input module specification comparison chart]

Specification \ Model	MELSEC-A series		MELSEC-Q series			
	AX40, AX40-UL (Sink/Source type)		QX40 (Positive common type)	QX40-S1 (Positive common type)	QX70 (Positive/Negative common shared type)	
No. of input points	16 points		16 points	16 points	16 points	
Isolation method	Photocoupler isolation		Photocoupler isolation	Photocoupler isolation	Photocoupler isolation	
Rated input voltage	12VDC	24VDC	24VDC (+20/-15%, within a ripple rate of 5%)	24VDC (+20/-15%, within a ripple rate of 5%)	5VDC	12VDC
Rated input current	4mA	10mA	Approx. 4mA	Approx. 6mA	Approx. 1.2mA	Approx. 3.3mA
ON voltage / ON current	9.5VDC or more / 3mA or more		19V or more / 3mA or more	19V or more / 4.0mA or more	3.5V or more / 1mA or more	
OFF voltage / OFF current	6VDC or less / 1.5mA or less		11V or less / 1.7mA or less	11V or less / 1.7mA or less	1V or less / 0.1mA or less	
Input resistance	Approx. 2.4kΩ		Approx. 5.6kΩ	Approx. 3.9kΩ	Approx. 3.3kΩ	
Response time OFF→ON	10ms or less		1/5/10/20/70ms or less	0.1/0.2/0.4/0.6/1ms	1/5/10/20/70ms or less	
Response time ON→OFF	10ms or less		1/5/10/20/70ms or less	0.1/0.2/0.4/0.6/1ms	1/5/10/20/70ms or less	
Internal current consumption	55mA (TYP. all points ON)		50mA (TYP. all points ON)	60mA (TYP. all points ON)	55mA (TYP. all points ON)	
Wiring method for common	8 points/common		16 points/common	16 points/common	16 points/common	
External interface	20-point terminal block		18-point terminal block	18-point terminal block	18-point terminal block	

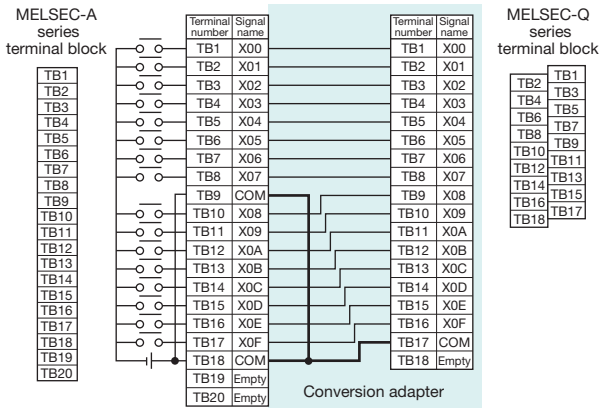

Specification \ Model	MELSEC-A series			MELSEC-Q series	
	AX70, AX70-UL (Sink/Source type)			QX70 (Positive/Negative common shared type)	
No. of input points	16 points			16 points	
Isolation method	Photocoupler isolation			Photocoupler isolation	
Rated input voltage	5VDC	12VDC	24VDC	5VDC	12VDC
Rated input current	3.5mA (TYP) 5.5mA (MAX)	2mA (TYP) 3mA (MAX)	4.5mA (TYP) 6mA (MAX)	Approx. 1.2mA	Approx. 3.3mA
ON voltage / ON current	(SW ON) 3.5VDC or more / 1.0mA or more (SW OFF) 5VDC or more / 1.0mA or more			3.5V or more / 1mA or more	
OFF voltage / OFF current	(SW ON) 1.1VDC or less / 0.2mA or less (SW OFF) 2VDC or less / 0.2mA or less			1V or less / 0.1mA or less	
Input resistance	(SW ON) Approx. 1.4kΩ, (SW OFF) Approx. 5.5kΩ			Approx. 3.3kΩ	
Response time OFF→ON	1.5ms or less			1/5/10/20/70ms or less	
Response time ON→OFF	3ms or less			1/5/10/20/70ms or less	
Internal current consumption	55mA (TYP. all points ON)			55mA (TYP. all points ON)	
Wiring method for common	8 points/common			16 points/common	
External interface	20-point terminal block			18-point terminal block	

Specification \ Model	MELSEC-A series		MELSEC-Q series	
	AX50 (Sink type)	AX50-S1 (Sink/Source type)	QX50 (DC Positive/Negative common shared type)	
No. of input points	16 points	16 points	16 points	
Isolation method	Photocoupler isolation	Photocoupler isolation	Photocoupler isolation	
Rated input voltage	48VDC	48VDC	48VDC	48VAC
Rated input current	4mA	4mA	4mA	
ON voltage / ON current	34VDC or more / 3mA or more	34VDC or more / 3mA or more	28V or more / 2.5mA or more	
OFF voltage / OFF current	10VDC or less / 1mA or less	10VDC or less / 1mA or less	10V or less / 1.0mA or less	
Input resistance	Approx. 11kΩ	Approx. 11kΩ	Approx. 11.2kΩ	
Response time OFF→ON	10ms or less	10ms or less	5ms or less	15ms or less
Response time ON→OFF	10ms or less	10ms or less	20ms or less	20ms or less
Internal current consumption	55mA (TYP. all points ON)	55mA (TYP. all points ON)	50mA (TYP. all points ON)	
Wiring method for common	8 points/common	8 points/common	16 points/common	
External interface	20-point terminal block	20-point terminal block	18-point terminal block	

Notes
1. In a case where the number of points per common changes from eight (two circuits) to 16 and the terminal numbers TB9 and TB18 on the MELSEC-A series side are used separately, a wiring change is required.
2. When replacing AX40/AX40-UL with QX40 or QX40-S1 and a rated input voltage of 12VDC is used, the voltage needs to be changed to 24VDC.
3. When replacing AX40/AX40-UL with QX70 and a rated input voltage of 24VDC is used, the voltage needs to be changed to 5VDC or 12VDC.
4. When replacing AX70/AX70-UL with QX70 and a rated input voltage of 24VDC is used, the voltage needs to be changed to 5VDC or 12VDC.
5. For detailed and general specifications not described in the input module specification comparison chart, refer to the user's manual of the input module used. Note that the areas where the specifications differ between the MELSEC-A series and the MELSEC-Q series are restricted in terms of specifications during replacement. Verify the specifications of the connected devices.
6. For ☐ areas, verify that the MELSEC-Q series module specifications satisfy the specifications of the connected device/equipment.

3) ERNT-AQTX80 Terminal block (20P)→Terminal block (18P)

Conversion adapter model	MELSEC-A series module model	No. of input points	MELSEC-Q series module model
ERNT-AQTX80	AX80 AX80-UL	16 points	QX80

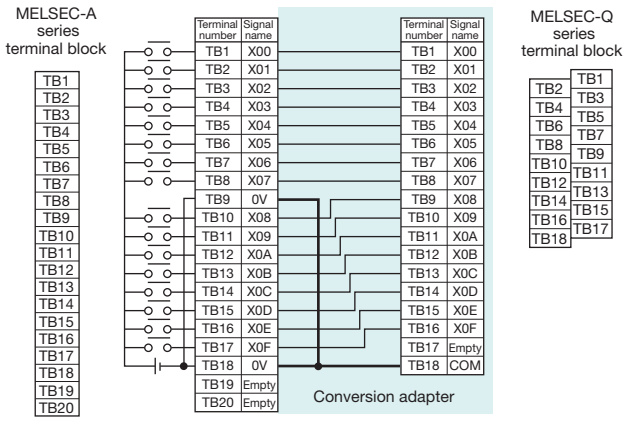

[Input module specification comparison chart]

Specification \ Model	MELSEC-A series		MELSEC-Q series
	AX80, AX80-UL (Source type)		QX80 (Negative common type)
No. of input points	16 points		16 points
Isolation method	Photocoupler isolation		Photocoupler isolation
Rated input voltage	12VDC	24VDC	24VDC
Rated input current	4mA	10mA	Approx. 4mA
ON voltage / ON current	9.5VDC or more / 3mA or more		19V or more / 3mA or more
OFF voltage / OFF current	6VDC or less / 1.5mA or less		11V or less / 1.7mA or less
Input resistance	Approx. 2.4kΩ		Approx. 5.6kΩ
Response time OFF→ON	10ms or less		1/5/10/20/70ms or less
Response time ON→OFF	10ms or less		1/5/10/20/70ms or less
Internal current consumption	55mA (TYP. all points ON)		50mA (TYP. all points ON)
Wiring method for common	8 points/common		16 points/common
External interface	20-point terminal block		18-point terminal block

Notes
1. In a case where the number of points per common changes from eight (two circuits) to 16 and the terminal numbers TB9 and TB18 on the MELSEC-A series side are used separately, a wiring change is required.
2. When a rated input voltage of 12VDC is used, the voltage needs to be changed to 24VDC.
3. For detailed and general specifications not described in the input module specification comparison chart, refer to the user's manual of the input module used. Note that the areas where the specifications differ between the MELSEC-A series and the MELSEC-Q series are restricted in terms of specifications during replacement. Verify the specifications of the connected devices.
4. For ▭ areas, verify that the MELSEC-Q series module specifications satisfy the specifications of the connected device/equipment.

4) ERNT-AQTX41 Terminal block (38P)→Connector (40P)

Conversion adapter model	MELSEC-A series module model	No. of input points	MELSEC-Q series module model
ERNT-AQTX41	AX41 AX41-UL	32 points	QX41 QX41-S2 QX71
	AX31-S1		QX41 QX41-S2
	AX41-S1		QX41-S1
	AX71		QX71

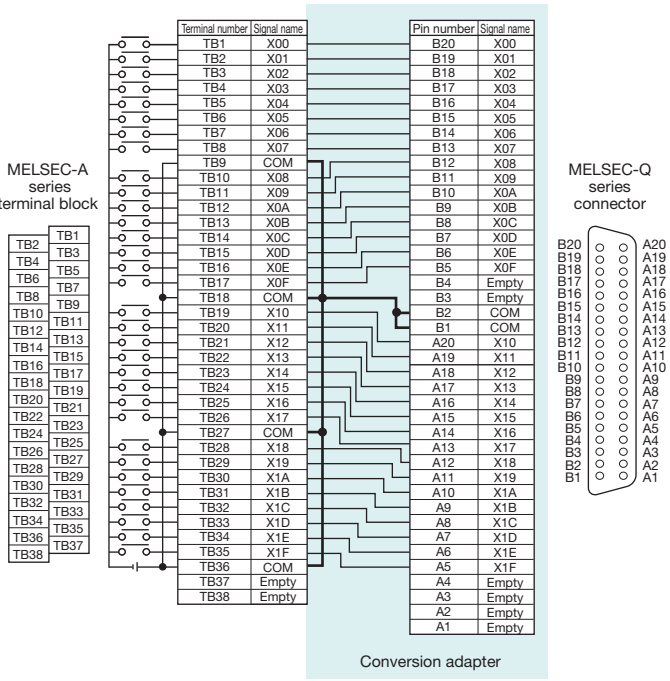

[Input module specification comparison chart]

Specification \ Model	MELSEC-A series		MELSEC-Q series		
	AX41, AX41-UL (Sink type)		QX41 (Positive common type)	QX41-S2 (Positive common type)	QX71 (Positive/Negative common shared type)
No. of input points	32 points		32 points	32 points	32 points
Isolation method	Photocoupler isolation		Photocoupler isolation	Photocoupler isolation	Photocoupler isolation
Rated input voltage	12VDC	24VDC	24VDC	24VDC	5VDC / 12VDC
Rated input current	4mA	10mA	Approx. 4mA	Approx. 6mA	Approx. 1.2mA / Approx. 3.3mA
ON voltage / ON current	9.5VDC or more / 3mA or more		19VDC or more / 3mA or more	15VDC or more / 3mA or more	3.5V or more / 1mA or more
OFF voltage / OFF current	6VDC or less / 1.5mA or less		11VDC or less / 1.7mA or less	5VDC or less / 1.7mA or less	1V or less / 0.1mA or less
Input resistance	Approx. 2.4kΩ		Approx. 5.6kΩ	Approx. 3.6kΩ	Approx. 3.3kΩ
Response time OFF→ON	10ms or less		1/5/10/20/70ms or less	1/5/10/20/70ms or less	1/5/10/20/70ms or less
Response time ON→OFF	10ms or less		1/5/10/20/70ms or less	1/5/10/20/70ms or less	1/5/10/20/70ms or less
Internal current consumption	110mA (TYP. all points ON)		75mA (TYP. all points ON)	75mA (TYP. all points ON)	70mA (TYP. all points ON)
Wiring method for common	8 points/common		32 points/common	32 points/common	32 points/common
External interface	38-point terminal block		40-pin connector	40-pin connector	40-pin connector

Specification \ Model	MELSEC-A series	MELSEC-Q series	
	AX31-S1 (Sink type)	QX41 (Positive common type)	QX41-S2 (Positive common type)
No. of input points	32 points	32 points	32 points
Isolation method	Photocoupler isolation	Photocoupler isolation	Photocoupler isolation
Rated input voltage	24VDC	24VDC	24VDC
Rated input current	8.5mA	Approx. 4mA	Approx. 6mA
ON voltage / ON current	16VDC or more / 5mA or more	19VDC or more / 3mA or more	15VDC or more / 3mA or more
OFF voltage / OFF current	8VDC or less / 2mA or less	11VDC or less / 1.7mA or less	5VDC or less / 1.7mA or less
Input resistance	Approx. 2.7kΩ	Approx. 5.6kΩ	Approx. 3.6kΩ
Response time OFF→ON	10ms or less	1/5/10/20/70ms or less	1/5/10/20/70ms or less
Response time ON→OFF	10ms or less	1/5/10/20/70ms or less	1/5/10/20/70ms or less
Internal current consumption	110mA (TYP. all points ON)	75mA (TYP. all points ON)	75mA (TYP. all points ON)
Wiring method for common	32 points/common	32 points/common	32 points/common
External interface	38-point terminal block	40-pin connector	40-pin connector

Specification \ Model	MELSEC-A series		MELSEC-Q series
	AX41-S1 (Sink type)		QX41-S1 (Positive common type)
No. of input points	32 points		32 points
Isolation method	Photocoupler isolation		Photocoupler isolation
Rated input voltage	12VDC	24VDC	24VDC
Rated input current	4mA	10mA	Approx. 4mA
ON voltage / ON current	9.5VDC or more / 3mA or more		19V or more / 3mA or more
OFF voltage / OFF current	6VDC or less / 1.5mA or less		9.5V or less / 1.5mA or less
Input resistance	Approx. 2.4kΩ		Approx. 5.6kΩ
Response time OFF→ON	0.1ms or less		0.1/0.2/0.4/0.6/1ms
Response time ON→OFF	0.2ms or less		0.1/0.2/0.4/0.6/1ms
Internal current consumption	110mA (TYP. all points ON)		75mA (TYP. all points ON)
Wiring method for common	8 points/common		32 points/common
External interface	38-point terminal block		40-pin connector

Specification \ Model	MELSEC-A series			MELSEC-Q series	
	AX71 (Sink/Source type)			QX71 (Positive/Negative common shared type)	
No. of input points	32 points			32 points	
Isolation method	Photocoupler isolation			Photocoupler isolation	
Rated input voltage	5VDC	12VDC	24VDC	5VDC	12VDC
Rated input current	3.5mA (TYP) 5.5mA (MAX)	2mA (TYP) 3mA (MAX)	4.5mA (TYP) 6mA (MAX)	Approx. 1.2mA	Approx. 3.3mA
ON voltage / ON current	(SW ON) 3.5VDC or more / 1.0mA or more (SW OFF) 5VDC or more / 1.0mA or more			3.5V or more / 1mAor more	
OFF voltage / OFF current	(SW ON) 1.1VDC or less / 0.2mA or less (SW OFF) 2VDC or less / 0.2mA or less			1V or less / 0.1mA or less	
Input resistance	(SW ON) Approx. 1.4kΩ, (SW OFF) Approx. 5.5kΩ			Approx. 3.3kΩ	
Response time OFF→ON	1.5ms or less			1/5/10/20/70ms or less	
Response time ON→OFF	3ms or less			1/5/10/20/70ms or less	
Internal current consumption	110mA (TYP. all points ON)			70mA (TYP. all points ON)	
Wiring method for common	8 points/common			32 points/common	
External interface	38-point terminal block			40-pin connector	

Notes
1. When replacing AX41/AX41-UL with QX41/QX41-S2/QX71, AX41-S1 with QX41-S1, or AX71 with QX71 in a case where the number of points per common changes from eight (four circuits) to 32 and the terminal numbers TB9, TB18, TB27, and TB36 on the MELSEC-A series side are used separately, a wiring change is required.
2. When replacing AX41/AX41-UL with QX41 or AX41-S1 with QX41-S1 and a rated input voltage of 12VDC is used, the voltage needs to be changed to 24VDC.
3. When replacing AX41/AX41-UL with QX71 and a rated input voltage of 24VDC is used, the voltage needs to be changed to 5VDC or 12VDC.
4. When replacing AX71 with QX71 and a rated input voltage of 24VDC is used, the voltage needs to be changed to 5VDC or 12VDC.
5. For detailed and general specifications not described in the input module specification comparison chart, refer to the user's manual of the input module used. Note that the areas where the specifications differ between the MELSEC-A series and the MELSEC-Q series are restricted in terms of specifications during replacement. Verify the specifications of the connected devices.
6. For ▭ areas, verify that the MELSEC-Q series module specifications satisfy the specifications of the connected device/equipment.

5) ERNT-AQTX81 Terminal block (38P)→Connector (37P)

Conversion adapter model	MELSEC-A series module model	No. of input points	MELSEC-Q series module model
ERNT-AQTX81	AX81	32 points	QX81
	AX81-S1		QX81-S2

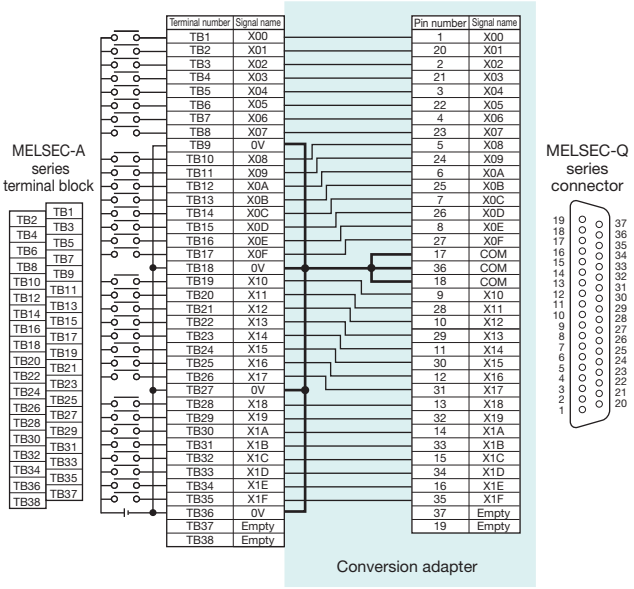

[Input module specification comparison chart]

Specification \ Model	MELSEC-A series				MELSEC-Q series	
	AX81 (Source type)		AX81-S1 (Sink/Source type)		QX81 (Negative common type)	QX81-S2 (Negative common type)
No. of input points	32 points		32 points		32 points	32 points
Isolation method	Photocoupler isolation		Photocoupler isolation		Photocoupler isolation	Photocoupler isolation
Rated input voltage	12VDC	24VDC	12VDC	24VDC	24VDC	24VDC
Rated input current	4mA	10mA	2.5mA	5mA	Approx. 4mA	Approx. 6mA
ON voltage / ON current	9.5VDC or more / 3mA or more		5.6VDC or more / 1.1mA or more		19VDC or more / 3mA or more	15VDC or more / 3mA or more
OFF voltage / OFF current	6VDC or less / 1.5mA or less		2.4VDC or less / 0.39mA or less		11VDC or less / 1.7mA or less	5VDC or less / 1.7mA or less
Input resistance	Approx. 2.4kΩ		Approx. 4.8kΩ		Approx. 5.6kΩ	Approx. 3.6kΩ
Response time OFF→ON	10ms or less		10ms or less		1/5/10/20/70ms or less	1/5/10/20/70ms or less
Response time ON→OFF	10ms or less		10ms or less		1/5/10/20/70ms or less	1/5/10/20/70ms or less
Internal current consumption	110mA (TYP. all points ON)		105mA (TYP. all points ON)		75mA (TYP. all points ON)	75mA (TYP. all points ON)
Wiring method for common	8 points/common		8 points/common		32 points/common	32 points/common
External interface	38-point terminal block		38-point terminal block		37-pin D-sub connector	37-pin D-sub connector

Notes
1. When the number of points per common changes from eight (four circuits) to 32 and the terminal numbers TB9, TB18, TB27, and TB36 on the MELSEC-A series side are used separately, a wiring change is required.
2. When replacing AX81-S1 with QX81, only the source type is compatible.
3. When a rated input voltage of 12VDC is used, the voltage needs to be changed to 24VDC.
4. For detailed and general specifications not described in the input module specification comparison chart, refer to the user's manual of the input module used. Note that the areas where the specifications differ between the MELSEC-A series and the MELSEC-Q series are restricted in terms of specifications during replacement. Verify the specifications of the connected devices.
5. For ▭ areas, verify that the MELSEC-Q series module specifications satisfy the specifications of the connected device/equipment.

6) ERNT-AQTY10 Terminal block (20P)→Terminal block (18P)

Conversion adapter model	MELSEC-A series module model	No. of output points	MELSEC-Q series module model
ERNT-AQTY10	AY10 AY11 AY11-UL AY11E AY11EEU	16 points	QY10

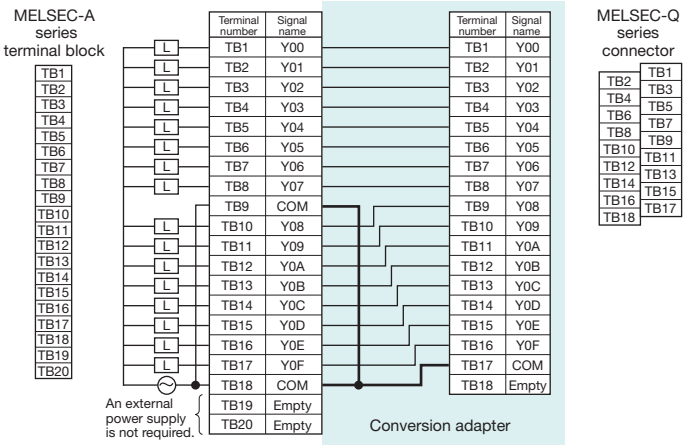

[Output module specification comparison chart]

Specification \ Model	MELSEC-A series				MELSEC-Q series
	AY10	AY11, AY11-UL	AY11E	AY11EEU	QY10
No. of output points	16 points	16 points	16 points	16 points	16 points
Isolation method	Photocoupler isolation	Photocoupler isolation	Photocoupler isolation	Photocoupler isolation	Relay isolation
Rated switching voltage/current	24VDC, 2A/point (Resistance load) 240VAC, 2A/point (COSΦ=1) 8A/common	24VDC, 2A/point (Resistance load) 240VAC, 2A/point (COSΦ=1) 8A/common	24VDC, 2A/point (Resistance load) 240VAC, 2A/point (COSΦ=1) 8A/common	24VDC, 2A/point (Resistance load) 24VAC, 2A/point (COSΦ=1) 8A/common	24VDC, 2A/point (Resistance load) 240VAC, 2A/point (COSΦ=1) 8A/common
Minimum switching load	5VDC, 1mA	5VDC, 1mA	5VDC, 1mA	5VDC, 1mA	5VDC, 1mA
Maximum switching voltage	264VAC, 125VDC	264VAC, 125VDC	250VAC, 125VDC	49.9VAC, 74.9VDC	264VAC, 125VDC
OFF leakage current	–	0.1mA (200VAC, 60Hz)	0.1mA (200VAC, 60Hz)	0.1mA (49.9VAC, 60Hz)	–
Response time OFF→ON	10ms or less	10ms or less	10ms or less	10ms or less	10ms or less
Response time ON→OFF	12ms or less	12ms or less	12ms or less	12ms or less	12ms or less
Surge suppressor	No	Varistor (387 to 473V)	Varistor (387 to 473V)	Varistor (387 to 473V)	No
Fuse	No	No	Yes	Yes	No
Internal current consumption	115mA (TYP. all points ON)	115mA (TYP. all points ON)	115mA (TYP. all points ON)	115mA (TYP. all points ON)	430mA (TYP. all points ON)
Wiring method for common	8 points/common	8 points/common	8 points/common	8 points/common	16 points/common
External interface	20-point terminal block	20-point terminal block	20-point terminal block	20-point terminal block	18-point terminal block

Notes
1. When the number of points per common changes from eight (two circuits) to 16 and the terminal numbers TB9 and TB18 on the MELSEC-A series side are used separately, a wiring change is required.
2. The external power supply connected to terminal numbers TB19 and TB20 on the MELSEC-A series side is not required.
3. For detailed and general specifications not described in the output module specification comparison chart, refer to the user's manual of the output module used. Note that the areas where the specifications differ between the MELSEC-A series and the MELSEC-Q series are restricted in terms of specifications during replacement. Verify the specifications of the connected devices.
4. For ☐ areas, verify that the MELSEC-Q series module specifications satisfy the specifications of the connected device/equipment.

7) ERNT-AQTY22 Terminal block (20P)→Terminal block (18P)

Conversion adapter model	MELSEC-A series module model	No. of output points	MELSEC-Q series module model
ERNT-AQTY22	AY22	16 points	QY22

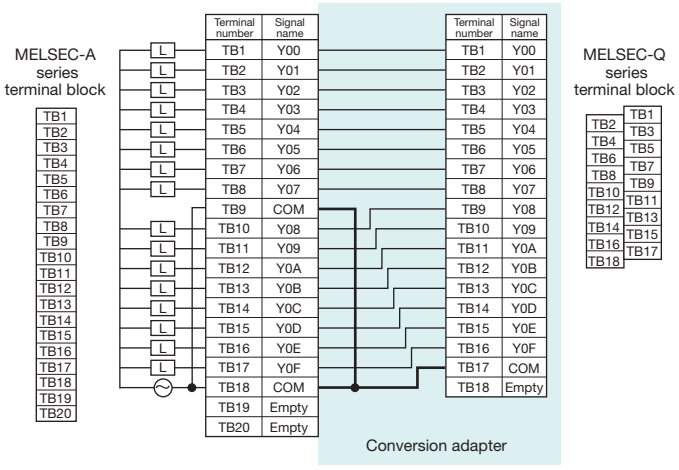

Notes
1. When the number of points per common changes from eight (two circuits) to 16 (one circuit) and the terminal numbers TB9 and TB18 on the MELSEC-A series side are used separately, a wiring change is required.
2. For detailed and general specifications not described in the output module specification comparison chart, refer to the user's manual of the output module used. Note that the areas where the specifications differ between the MELSEC-A series and the MELSEC-Q series are restricted in terms of specifications during replacement. Verify the specifications of the connected devices.
3. For ☐ areas, verify that the MELSEC-Q series module specifications satisfy the specifications of the connected device/equipment.

[Output module specification comparison chart]

Specification \ Model	MELSEC-A series	MELSEC-Q series
	AY22	QY22
No. of output points	16 points	16 points
Isolation method	Photocoupler isolation	Photocoupler isolation
Rated load voltage	100 to 240VAC, 50/60Hz±5%	100 to 240VAC (+10 / -15%)
Maximum load current	2A/point, 3.3A/common	0.6A/point, 4.8A/common
Minimum load voltage/current	24VAC 100mA, 100VAC 10mA, 240VAC 20mA	24VAC 100mA, 100VAC 25mA, 240VAC 25mA
Maximum rush current	40A 10ms or less, 15A 100ms or less	20A, one cycle or less
OFF leakage current	1.5mA (120VAC, 60Hz) 3mA (240VAC, 60Hz)	1.5mA or less (at 120V, 60Hz) 3mA or less (at 240V, 60Hz)
ON maximum voltage drop	1.5VAC or less 1.8VAC or less 5VAC or less (0.2A or less)	1.5V or less
Response time OFF→ON	1ms or less	1ms + 0.5Hz or less
Response time ON→OFF	0.5 cycles + 1ms or less	1ms + 0.5Hz or less (Rated load, resistance load)
Surge suppressor	CR absorber (0.022μF + 47Ω) Varistor (387 to 473V)	CR absorber
Fuse	Yes	No (Fuse installation recommended with external wiring)
Internal current consumption	305mA (TYP. all points ON)	250mA (MAX. all points ON)
Wiring method for common	8 points/common	16 points/common
External interface	20-point terminal block	18-point terminal block

8) ERNT-AQTY40 Terminal block (20P)→Terminal block (18P)

Conversion adapter model	MELSEC-A series module model	No. of output points	MELSEC-Q series module model
ERNT-AQTY40	AY40 AY40-UL	16 points	QY40P
	AY40P		
	AY70 AY70-UL		QY70

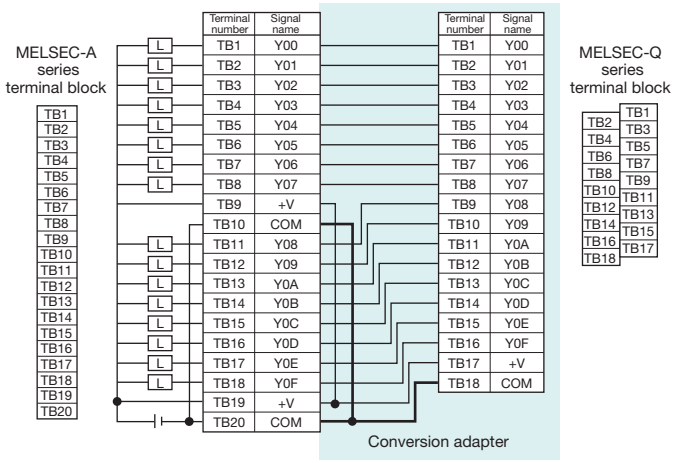

Notes
1. When the number of points per common changes from eight (two circuits) to 16 (one circuit) and the terminal numbers TB9 and TB19 as well as TB10 and TB20 on the MELSEC-A series side are used separately, a wiring change is required.
2. For detailed and general specifications not described in the output module specification comparison chart, refer to the user's manual of the output module used. Note that the areas where the specifications differ between the MELSEC-A series and the MELSEC-Q series are restricted in terms of specifications during replacement. Verify the specifications of the connected devices.
3. For ▭ areas, verify that the MELSEC-Q series module specifications satisfy the specifications of the connected device/equipment.

[Output module specification comparison chart]

Specification \ Model	MELSEC-A series: AY40, AY40-UL (Sink type)	MELSEC-A series: AY40P (Sink type)	MELSEC-Q series: QY40P (Sink type)
No. of output points	16 points	16 points	16 points
Isolation method	Photocoupler isolation	Photocoupler isolation	Photocoupler isolation
Rated load voltage	12/24VDC	12/24VDC	12 to 24VDC
Maximum load current	0.1A/point, 0.8A/common	0.1A/point, 0.8A/common	0.1A/point, 1.6A/common
Maximum rush current	0.4A	0.38A, 5ms or less	0.7A, 10ms or less
OFF leakage current	0.1mA or less	0.1mA or less	0.1mA or less
ON maximum voltage drop	2.5VDC (0.1A), 1.75VDC (5mA), 1.7VDC (1mA)	2.5VDC (0.1A), 1.75VDC (5mA), 1.7VDC (1mA)	0.1VDC (TYP) 0.1A, 0.2VDC (MAX) 0.1A
Response time OFF→ON	2ms or less	2ms or less	1ms or less
Response time ON→OFF	2ms or less (Resistance load)	2ms or less (Resistance load)	1ms or less (Rated load, resistance load)
Internal current consumption	115mA (TYP. all points ON)	115mA (TYP. all points ON)	65mA (TYP. all points ON)
Surge suppressor	Clamp diode	Clamp diode	Zener diode
Fuse	No	No	No
Protection function	No	Yes (thermal protection, short-circuit protection)	Yes (thermal protection, short-circuit protection)
Wiring method for common	8 points/common	8 points/common	16 points/common
External interface	20-point terminal block	20-point terminal block	18-point terminal block

Specification \ Model	MELSEC-A series: AY70, AY70-UL (Sink type)	MELSEC-Q series: QY70 (Sink type)
No. of output points	16 points	16 points
Isolation method	Photocoupler isolation	Photocoupler isolation
Rated load voltage	5/12VDC	5 to 12VDC
Maximum load current	16mA/point, 128mA/common	16mA/point, 256mA/common
Maximum rush current	50mA, 10ms	40mA, 10ms or less
OFF leakage current	V_{OH}: 3.5VDC (Vcc=DC5V, I_{OH}=0.4mA)	V_{OH}: 3.5VDC (Vcc=5VDC, I_{OH}=0.4mA)
ON maximum voltage drop	V_{OL}: 0.2VDC (I_{OL}=16mA)	V_{OL}: 0.3VDC
Response time OFF→ON	1ms or less	0.5ms or less
Response time ON→OFF	1ms or less	0.5ms or less (Resistance load)
Internal current consumption	100mA (TYP. all points ON)	95mA (TYP. all points ON)
Surge suppressor	No	No
Fuse	No	Yes
Wiring method for common	8 points/common	16 points/common
External interface	20-point terminal block	18-point terminal block

9) ERNT-AQTY50 Terminal block (20P)→Terminal block (18P)

Conversion adapter model	MELSEC-A series module model	No. of output points	MELSEC-Q series module model
ERNT-AQTY50	AY50 AY50-UL	16 points	QY50

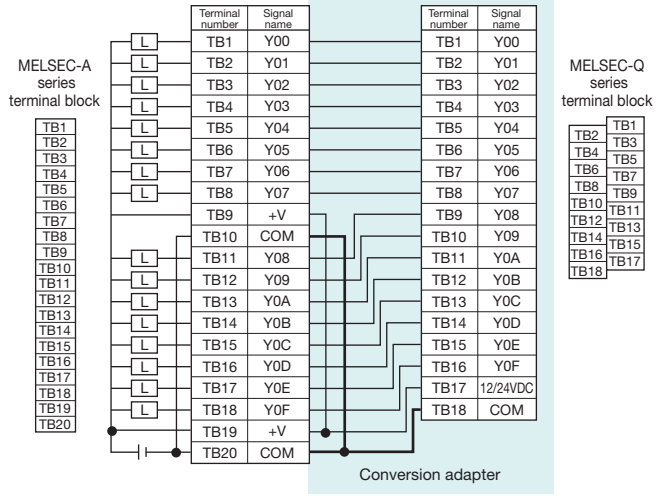

[Output module specification comparison chart]

Specification \ Model	MELSEC-A series: AY50, AY50-UL (Sink type)	MELSEC-Q series: QY50 (Sink type)
No. of output points	16 points	16 points
Isolation method	Photocoupler isolation	Photocoupler isolation
Rated load voltage	12/24VDC	12 to 24VDC
Maximum load current	0.5A/point, 2A/common	0.5A/point, 4A/common
Maximum rush current	7A 10ms or less, 3.5A 100ms or less	4A, 10ms or less
OFF leakage current	0.1mA or less	0.1mA or less
ON maximum voltage drop	0.9VDC (TYP) 0.5A, 1.5VDC (MAX) 0.5A	0.2VDC (TYP) 0.5A, 0.3VDC (MAX) 0.5A
Response time OFF→ON	2ms or less	1ms or less
Response time ON→OFF	2ms or less (resistance load)	1ms or less (Rated load, resistance load)
Internal current consumption	115mA (TYP. all points ON)	80mA (TYP. all points ON)
Surge suppressor	Varistor (52 to 62V)	Zener diode
Fuse	Yes	Yes
Wiring method for common	8 points/common	16 points/common
External interface	20-point terminal block	18-point terminal block

Notes
1. When the number of points per common changes from eight (two circuits) to 16 (one circuit) and the terminal numbers TB9 and TB19 as well as TB10 and TB20 on the MELSEC-A series side are used separately, a wiring change is required.
2. For detailed and general specifications not described in the output module specification comparison chart, refer to the user's manual of the output module used. Note that the areas where the specifications differ between the MELSEC-A series and the MELSEC-Q series are restricted in terms of specifications during replacement. Verify the specifications of the connected devices.
3. For ▭ areas, verify that the MELSEC-Q series module specifications satisfy the specifications of the connected device/equipment.

10) ERNT-AQTY80 Terminal block (20P)→Terminal block (18P)

Conversion adapter model	MELSEC-A series module model	No. of output points	MELSEC-Q series module model
ERNT-AQTY80	AY80	16 points	QY80

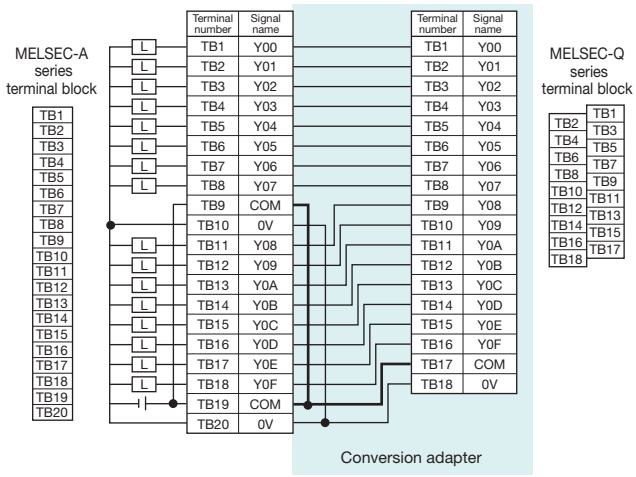

[Output module specification comparison chart]

Specification \ Model	MELSEC-A series: AY80 (Source type)	MELSEC-Q series: QY80 (Source type)
No. of output points	16 points	16 points
Isolation method	Photocoupler isolation	Photocoupler isolation
Rated load voltage	12/24VDC	12 to 24VDC
Maximum load current	0.5A/point, 2A/common	0.5A/point, 4A/common
Maximum rush current	7A 10ms or less, 3.5A 100ms or less	4A, 10ms or less
OFF leakage current	0.1mA or less	0.1mA or less
ON maximum voltage drop	1.5VDC (MAX) 0.5A	0.2 VDC (TYP) 0.5A, 0.3 VDC (MAX) 0.5A
Response time OFF→ON	2ms or less	1ms or less
Response time ON→OFF	2ms or less (Resistance load)	1ms or less (rated load, resistance load)
Internal current consumption	115mA (TYP. all points ON)	80mA (TYP. all points ON)
Surge suppressor	Varistor (52 to 62V)	Zener diode
Fuse	Yes	Yes
Wiring method for common	8 points/common	16 points/common
External interface	20-point terminal block	18-point terminal block

Notes
1. When the number of points per common changes from eight (two circuits) to 16 (one circuit) and the terminal numbers TB9 and TB19 as well as TB10 and TB20 on the MELSEC-A series side are used separately, a wiring change is required.
2. For detailed and general specifications not described in the output module specification comparison chart, refer to the user's manual of the output module used. Note that the areas where the specifications differ between the MELSEC-A series and the MELSEC-Q series are restricted in terms of specifications during replacement. Verify the specifications of the connected devices.
3. For ▭ areas, verify that the MELSEC-Q series module specifications satisfy the specifications of the connected device/equipment.

11) ERNT-AQTY41 Terminal block (38P)→Connector (40P)

Conversion adapter model	MELSEC-A series module model	No. of output points	MELSEC-Q series module model
ERNT-AQTY41	AY41 AY41-UL	32 points	QY41P
	AY41P		
	AY71		QY71

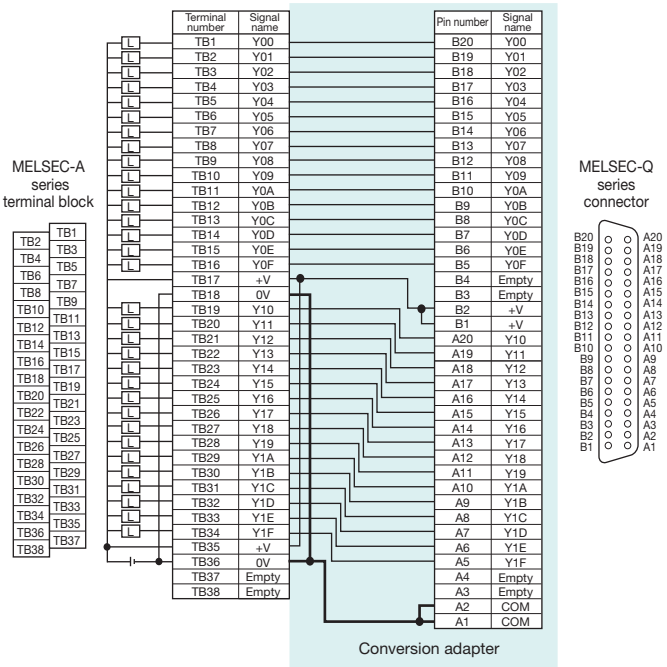

[Output module specification comparison chart]

Specification \ Model	MELSEC-A series: AY41, AY41-UL (Sink type)	MELSEC-A series: AY41P (Sink type)	MELSEC-Q series: QY41P (Sink type)
No. of output points	32 points	32 points	32 points
Isolation method	Photocoupler isolation	Photocoupler isolation	Photocoupler isolation
Rated load voltage	12/24VDC	12/24VDC	12 to 24VDC
Maximum load current	0.1A/point, 1.6A/common	0.1A/point, 1.0A/common	0.1A/point, 2A/common
Maximum rush current	0.4A	0.38A, 5ms or less	0.7A, 10ms or less
OFF leakage current	0.1mA or less	0.1mA or less	0.1mA or less
ON maximum voltage drop	2.5VDC (0.1A), 1.75VDC (5mA), 1.7VDC (1mA)	2.5VDC (0.1A), 1.75VDC (5mA), 1.7VDC (1mA)	0.1VDC (TYP) 0.1A, 0.2VDC (MAX) 0.1A
Response time OFF→ON	2ms or less	2ms or less	1ms or less
Response time ON→OFF	2ms or less (Resistance load)	2ms or less (Resistance load)	1ms or less (Rated load, resistance load)
Internal current consumption	230mA (TYP. all points ON)	230mA (TYP. all points ON)	105mA (TYP. all points ON)
Surge suppressor	Clamp diode	Clamp diode	Zener diode
Fuse	No	No; With protection function (thermal protection, short-circuit protection)	No; With protection function (thermal protection, short-circuit protection)
Wiring method for common	16 points/common	16 points/common	32 points/common
External interface	38-point terminal block	38-point terminal block	40-pin connector

Specification \ Model	MELSEC-A series: AY71 (Sink type)	MELSEC-Q series: QY71 (Sink type)
No. of output points	32 points	32 points
Isolation method	Photocoupler isolation	Photocoupler isolation
Rated load voltage	5/12VDC	5 to 12VDC
Maximum load current	16mA/point, 256mA/common (sink load)	16mA/point, 512A/common
Maximum rush current	50mA 10ms	40mA, 10ms or less
OFF leakage current	V_{OH}: 3.5VDC (V_{CC}=5VDC, I_{OH}=0.4mA)	V_{OH}: 3.5VDC (V_{CC}=5VDC, I_{OH}=0.4mA)
ON maximum voltage drop	V_{OL}: 0.2VDC (I_{OL}=16mA)	V_{OL}: 0.3VDC
Response time OFF→ON	1ms or less	0.5ms or less
Response time ON→OFF	1ms or less	0.5ms or less (Resistance load)
Internal current consumption	200mA (TYP. all points ON)	150mA (TYP. all points ON)
Surge suppressor	No	No
Fuse	No	Yes
Wiring method for common	16 points/common	32 points/common
External interface	38-point terminal block	40-pin connector

Notes
1. When the number of points per common changes from 16 (two circuits) to 32 (one circuit) and the terminal numbers TB17 and TB35 as well as TB18 and TB36 on the MELSEC-A series side are used separately, a wiring change is required.
2. For detailed and general specifications not described in the output module specification comparison chart, refer to the user's manual of the output module used. Note that the areas where the specifications differ between the MELSEC-A series and the MELSEC-Q series are restricted in terms of specifications during replacement. Verify the specifications of the connected devices.
3. For ▭ areas, verify that the MELSEC-Q series module specifications satisfy the specifications of the connected device/equipment.

12) ERNT-AQTY81 Terminal block (38P)→Connector (37P)

Conversion adapter model	MELSEC-A series module model	No. of output points	MELSEC-Q series module model
ERNT-AQTY81	AY81 AY81EP	32 points	QY81P

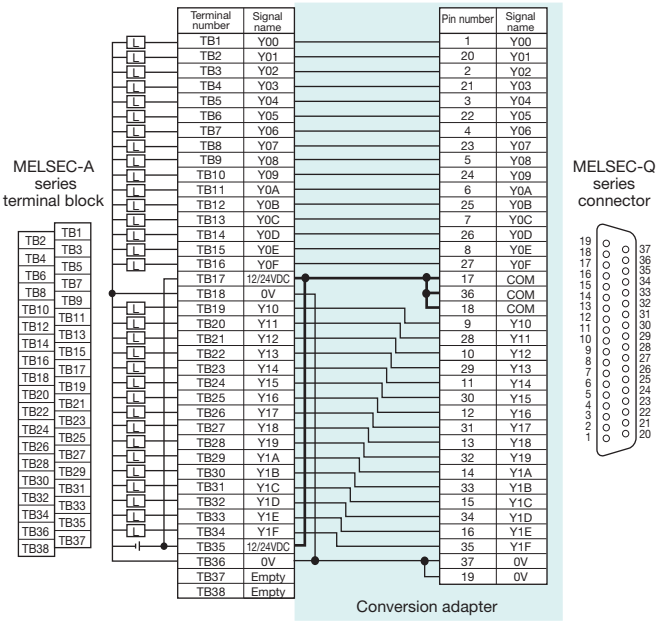

[Output module specification comparison chart]

Specification \ Model		MELSEC-A series AY81 (Source type)	MELSEC-A series AY81EP (Source type)	MELSEC-Q series QY81P (Source type)
No. of output points		32 points	32 points	32 points
Isolation method		Photocoupler isolation	Photocoupler isolation	Photocoupler isolation
Rated load voltage		12/24VDC	12/24VDC	12 to 24VDC
Maximum load current		0.5A/point, 4A/common	0.8A/point, 0.4A/point (60% ON, 55°C)	0.1A/point, 2A/common
Maximum rush current		4A, 10ms or less	No restrictions (Short-circuit protection)	0.7A, 10ms or less
OFF leakage current		0.1mA or less	1mA or less	0.1mA or less
ON maximum voltage drop		1.5VDC (MAX) 0.5A	1.1 V (TYP) 0.8A, 1.5V (MAX) 0.8A	0.1VDC (TYP) 0.1A, 0.2VDC (MAX) 0.1A
Response time	OFF→ON	2ms or less	0.5ms or less	1ms or less
	ON→OFF	2ms or less (Resistance load)	1.5ms or less	1ms or less (Rated load, resistance load)
Internal current consumption		230mA (TYP. all points ON)	230mA (TYP. all points ON)	95mA (TYP. all points ON)
Surge suppressor		Varistor (52 to 62V)	Surge absorbing diode	Zener diode
Fuse		No	No; With protection function (thermal protection, short-circuit protection)	No; With protection function (thermal protection, short-circuit protection)
Wiring method for common		16 points/common	16 points/common	32 points/common
External interface		38-point terminal block	38-point terminal block	37-pin D-sub connector

Notes
1. When the number of points per common changes from 16 (two circuits) to 32 (one circuit) and the terminal numbers TB17 and TB35 as well as TB18 and TB36 on the MELSEC-A series side are used separately, a wiring change is required.
   When replacing with QY80 (two modules) using the ERNT-AQTY51 (page 1-14. Not applicable to Mitsubishi Electric Q series large type base units), a wiring change is not required.
2. For detailed and general specifications not described in the output module specification comparison chart, refer to the user's manual of the output module used. Note that the areas where the specifications differ between the MELSEC-A series and the MELSEC-Q series are restricted in terms of specifications during replacement. Verify the specifications of the connected devices.
3. For ▭ areas, verify that the MELSEC-Q series module specifications satisfy the specifications of the connected device/equipment.

2-slot type (Not applicable to Mitsubishi Electric Q series large type base units)

1) ERNT-AQTX11 Terminal block (38P)→Terminal block (18P) × 2

Conversion adapter model	MELSEC-A series module model	No. of input points	MELSEC-Q series module model	No. of required modules
ERNT-AQTX11	AX11 AX11EU	32 points	QX10	2 modules

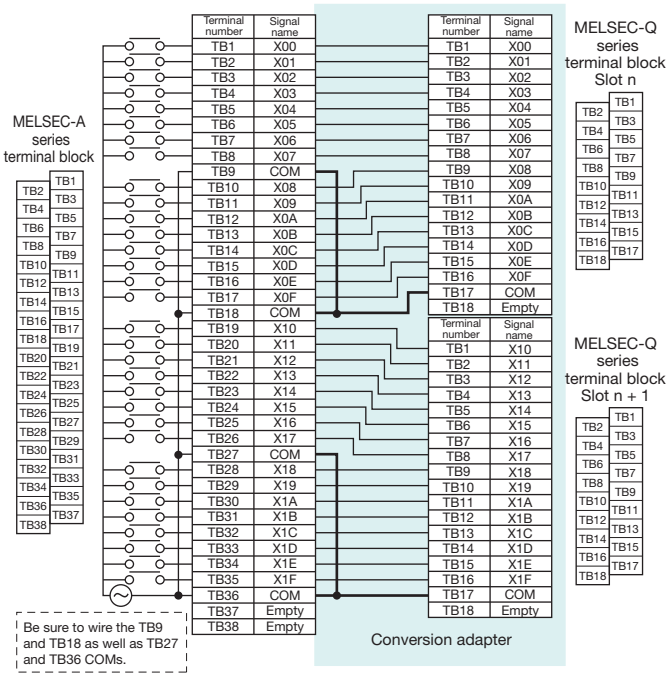

[Input module specification comparison chart]

Specification \ Model		MELSEC-A series AX11	MELSEC-A series AX11EU	MELSEC-Q series QX10
No. of input points		32 points		16 points
Isolation method		Photocoupler isolation		Photocoupler isolation
Rated input voltage		100 to 120VAC 50/60Hz		100 to 120VDC (+10/-15%) 50/60Hz (±3Hz)
Rated input current		10mA (100VAC, 60Hz)	12mA (120VAC, 60Hz)	Approx. 8mA (100VAC, 60Hz) Approx. 7mA (100VAC, 50Hz)
Rush current		300mA, maximum, within 0.3ms (at 132VAC)	300mA, maximum, within 1ms (at 132VAC)	200mA, maximum, within 1ms (at 132VAC)
ON voltage / ON current		80VAC or more / 6mA or more	79VAC or more / 6mA or more	80VAC or more / 5mA or more (50Hz, 60Hz)
OFF voltage / OFF current		40VAC or less / 4mA or less		30VAC or less / 1.7mA or less (50Hz, 60Hz)
Input impedance		Approx. 10kΩ (60Hz), Approx. 12kΩ (50Hz)		Approx. 12kΩ (60Hz), Approx. 15kΩ (50Hz)
Response time	OFF→ON	15ms or less	15ms or less (100VAC, 60Hz)	15ms or less (100VAC 50Hz, 60Hz)
	ON→OFF	25ms or less	25ms or less (100VAC, 60Hz)	20ms or less (100VAC 50Hz, 60Hz)
Internal current consumption		110mA (TYP. all points ON)	150mA (TYP. all points ON)	50mA (TYP. all points ON)
Wiring method for common		32 points/common		16 points/common
External interface		38-point terminal block		18-point terminal block

Notes
1. For detailed and general specifications not described in the input module specification comparison chart, refer to the user's manual of the input module used. Note that the areas where the specifications differ between the MELSEC-A series and the MELSEC-Q series are restricted in terms of specifications during replacement. Verify the specifications of the connected devices.
2. Be sure to wire the COMs of terminal numbers TB9and TB18 as well as TB27 and TB36 of the MELSEC-A series side.
3. For ▭ areas, verify that the MELSEC-Q series module specifications satisfy the specifications of the connected device/equipment.

2) ERNT-AQTY10A Terminal block (38P)→Terminal block (18P) × 2

Conversion adapter model	MELSEC-A series module model	No. of output points	MELSEC-Q series module model	No. of required modules
ERNT-AQTY10A	AY10A AY10A-UL AY11A AY11AEU	16 points	QY18A	2 modules

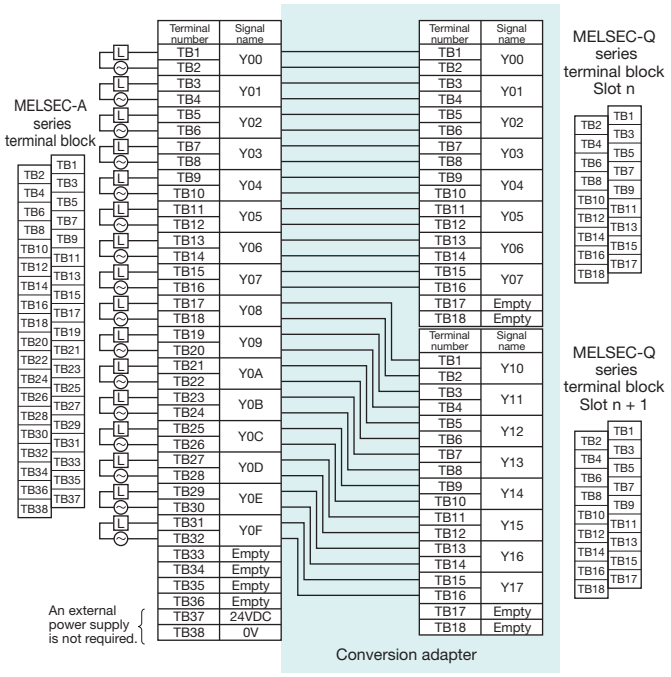

[Output module specification comparison chart]

Specification \ Model	MELSEC-A series			MELSEC-Q series
	AY10A AY10A-UL	AY11A	AY11AEU	QY18A
No. of output points	16 points			8 points
Isolation method	Photocoupler isolation			Relay isolation
Rated switching voltage/current	24VDC, 2A/point (Resistance load) 240VAC, 2A/point (COSΦ=1)		24VDC 2A/point (Resistance load) 24VAC 2A/point (COSΦ=1)	24VDC, 2A/point (Resistance load) 240VAC, 2A/point (COSΦ=1)
Minimum switching load	5VDC, 1mA			5VDC, 1mA
Maximum switching load	264VAC, 125VDC		49.9VAC, 74.9VDC	264VAC, 125VDC
OFF leakage current	–	0.1mA (200VAC, 60Hz)	0.1mA (49.9VAC, 60Hz)	–
Response time OFF→ON	10ms or less			10ms or less
Response time ON→OFF	12ms or less			12ms or less
Surge suppressor	No	Varistor (387 to 473V)		No
Fuse	No			No
Internal current consumption	115mA (TYP. all points ON)			240mA (TYP. all points ON)
Wiring method for common	No (All points independent contacts)			No (All points independent contacts)
External interface	38-point terminal block			18-point terminal block

Notes
1. An external power supply connected to terminal numbers TB37 and TB38 on the MELSEC-A series side is not required.
2. For detailed and general specifications not described in the output module specification comparison chart, refer to the user's manual of the output module used. Note that the areas where the specifications differ between the MELSEC-A series and the MELSEC-Q series are restricted in terms of specifications during replacement. Verify the specifications of the connected devices.
3. QY18A is a 16-point occupied module. Thus, Y08-Y0F require a program change to Y10-Y17.
4. For ▭ areas, verify that the MELSEC-Q series module specifications satisfy the specifications of the connected device/equipment.

3) ERNT-AQTY13 Terminal block (38P)→Terminal block (18P) × 2

Conversion adapter model	MELSEC-A series module model	No. of output points	MELSEC-Q series module model	No. of required modules
ERNT-AQTY13	AY13 AY13E AY13EU	32 points	QY10	2 modules

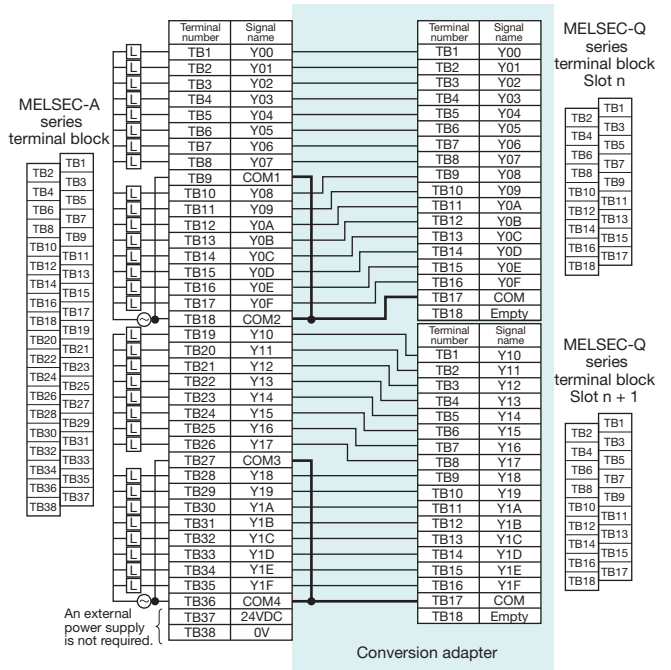

[Output module specification comparison chart]

Specification \ Model	MELSEC-A series			MELSEC-Q series
	AY13	AY13E	AY13EU	QY10
No. of output points	32 points			16 points
Isolation method	Photocoupler isolation			Relay isolation
Rated switching voltage/current	24VDC, 2A/point (Resistance load) 240VAC, 2A/point (COSΦ=1) 5A/common		24VDC 2A/point (Resistance load) 24VAC 2A/point (COSΦ=1) 5A/common	24VDC, 2A/point (Resistance load) 240VAC, 2A/point (COSΦ=1) 8A/common
Minimum switching load	5VDC, 1mA			5VDC, 1mA
Maximum switching load	264VAC, 125VDC	250VAC, 125VDC	49.9VAC, 74.9VDC	264VAC, 125VDC
OFF leakage current	–			–
Response time OFF→ON	10ms or less			10ms or less
Response time ON→OFF	12ms or less			12ms or less
Surge suppressor	No			No
Fuse	No	Yes	No	No
Internal current consumption	230mA (TYP. all points ON)			430mA (TYP. all points ON)
Wiring method for common	8 points/common			16 points/common
External interface	38-point terminal block			18-point terminal block

Notes
1. In a case where the number of points per common changes from eight (four circuits) to 16 (one circuit) using two modules and the terminal numbers TB9 and TB18 as well as TB27 and TB36 on the MELSEC-A series side are used separately, a wiring change is required.
2. An external power supply connected to terminal numbers TB37 and TB38 on the MELSEC-A series side is not required.
3. For detailed and general specifications not described in the output module specification comparison chart, refer to the user's manual of the output module used. Note that the areas where the specifications differ between the MELSEC-A series and the MELSEC-Q series are restricted in terms of specifications during replacement. Verify the specifications of the connected devices.
4. For ▭ areas, verify that the MELSEC-Q series module specifications satisfy the specifications of the connected device/equipment.

4) ERNT-AQTY23 Terminal block (38P)→Terminal block (18P) × 2

Conversion adapter model	MELSEC-A series module model	No. of output points	MELSEC-Q series module model	No. of required modules
ERNT-AQTY23	AY23	32 points	QY22	2 modules

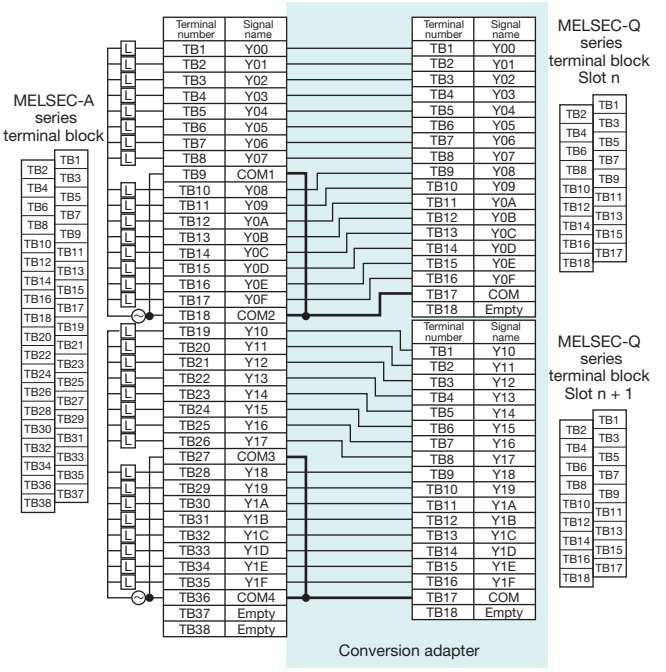

[Output module specification comparison chart]

Specification \ Model	MELSEC-A series AY23	MELSEC-Q series QY22
No. of output points	32 points	16 points
Isolation method	Photocoupler isolation	Photocoupler isolation
Rated load voltage	100 to 240VAC 40 to 70Hz	100 to 240VAC (+10 / -15%)
Maximum load current	0.6A/point, 2.4A/common	0.6A/point, 4.8A/common
Minimum load voltage/current	24VAC 100mA, 100VAC 10mA, 240VAC 10mA	24VAC 100mA, 100VAC 25mA, 240VAC 25mA
Maximum rush current	20A 10ms or less, 8A 100ms or less	20A, one cycle or less
OFF leakage current	1.5mA (120VAC, 60Hz) 3mA (240VAC, 60Hz)	1.5mA or less (at 120V, 60Hz) 3mA or less (at 240V, 60Hz)
ON maximum voltage drop	1.5VAC or less (100 to 600mA), 1.8VAC or less (50 to 100mA), 2VAC or less (10 to 50mA)	1.5V or less
Response time OFF→ON	1ms	1ms + 0.5Hz or less
Response time ON→OFF	0.5 cycles + 1ms or less	1ms + 0.5Hz or less (Rated load, resistance load)
Surge suppressor	CR absorber	CR absorber
Fuse	Yes	No (Fuse installation recommended with external wiring)
Internal current consumption	590mA (TYP. all points ON)	250mA (MAX all points ON)
Wiring method for common	8 points/common	16 points/common
External interface	38-point terminal block	18-point terminal block

Notes
1. In a case where the number of points per common changes from eight (four circuits) to 16 (one circuit) using two modules and the terminal numbers TB9 and TB18 as well as TB27 and TB36 on the MELSEC-A series side are used separately, a wiring change is required.
2. For detailed and general specifications not described in the output module specification comparison chart, refer to the user's manual of the output module used. Note that the areas where the specifications differ between the MELSEC-A series and the MELSEC-Q series are restricted in terms of specifications during replacement. Verify the specifications of the connected devices.
3. For ▭ areas, verify that the MELSEC-Q series module specifications satisfy the specifications of the connected device/equipment.

5) ERNT-AQTY51 Terminal block (38P)→Terminal block (18P) × 2

Conversion adapter model	MELSEC-A series module model	No. of output points	MELSEC-Q series module model	No. of required modules
ERNT-AQTY51	AY51 AY51-UL AY51-S1	32 points	QY50	2 modules
	AY81 AY81EP		QY80	

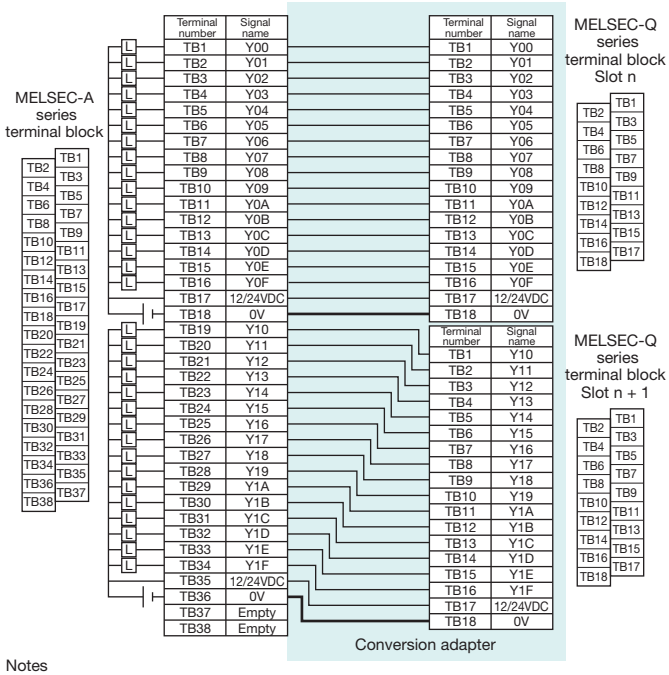

Notes
1. For detailed and general specifications not described in the output module specification comparison chart, refer to the user's manual of the input module used. Note that the areas where the specifications differ between the MELSEC-A series and the MELSEC-Q series are restricted in terms of specifications during replacement. Verify the specifications of the connected devices.
2. For ▭ areas, verify that the MELSEC-Q series module specifications satisfy the specifications of the connected device/equipment.
3. When the terminal number TB17/TB35 and TB18/TB36 on the MELSEC-A series side are not separated (are the shared common), it also can be replaced with the QY81P (one module) using the ERNT-AQTY81 (page 1-12). (A wiring change is not required.)

[Output module specification comparison chart]

Specification \ Model	MELSEC-A series AY51, AY51-UL	MELSEC-A series AY51-S1	MELSEC-Q series QY50
No. of output points	32 points		16 points
Isolation method	Photocoupler isolation		Photocoupler isolation
Rated load voltage	12/24VDC		12 to 24VDC
Maximum load current	0.5A/point, 4A/common	0.3A/point, 2A/common (1A / fuse common)	0.5A/point, 4A/common
Maximum rush current	4A, 10ms or less	3A, 10ms or less	4A, 10ms or less
OFF leakage current	0.1mA or less		0.1mA or less
ON maximum voltage drop	0.9VDC (TYP) 0.5A, 1.5VDC (MAX) 0.5A	1VDC (TYP) 0.3 A, 1.5VDC (MAX) 0.3A	0.2VDC (TYP) 0.5A, 0.3VDC (MAX) 0.5A
Response time OFF→ON	2ms or less		1ms or less
Response time ON→OFF	2ms or less (Resistance load)		1ms or less (Rated load, resistance load)
Surge suppressor	Varistor (52 to 62V)	Transistor built-in zener diode	Zener diode
Fuse	No	Yes	Yes
Internal current consumption	230mA (TYP. all points ON)	310mA (TYP. all points ON)	80mA (TYP all points ON)
Wiring method for common	16 points/common		16 points/common
External interface	38-point terminal block		18-point terminal block

Specification \ Model	MELSEC-A series AY81 (Source type)	MELSEC-A series AY81EP (Source type)	MELSEC-Q series QY80 (Source type)
No. of output points	32 points		16 points
Isolation method	Photocoupler isolation		Photocoupler isolation
Rated load voltage	12/24VDC		12 to 24VDC
Maximum load current	0.5A/point, 4A/common	0.8A/point, 0.4A/common (60%ON, 55°C)	0.5A/point, 4A/common
Maximum rush current	4A, 10mA or less	No restriction (Short-circuit protection)	4A, 10ms or less
OFF leakage current	0.1mA or less	1mA or less	0.1mA or less
ON maximum voltage drop	1.5VDC (MAX) 0.5A	1.1V (TYP) 0.8A 1.5V (MAX) 0.8A	0.2VDC (TYP) 0.5A 0.3VDC (MAX) 0.5A
Response time OFF→ON	2ms or less	0.5ms or less	1ms or less
Response time ON→OFF	2ms or less (Resistance Load)	1.5ms or less	1ms or less (Rated load, resistance load)
Surge suppressor	Varistor (52 to 62V)	Surge absorbing diode	Zener diode
Fuse	No	No; With protection circuit (thermal protection, short-circuit protection)	Yes [6.7A (not replaceable), fuse breaking capacity 50A]
Internal current consumption	230mA (TYP. all points ON)		80mA (TYP all points ON)
Wiring method for common	16 points/common		16 points/common
External interface	38-point terminal block		18-point terminal block

For Analog Modules

1-slot type (Applicable to Mitsubishi Electric Q series large type base units as well)

1) ERNT-AQT68AD Terminal block (38P)→Terminal block (18P)

Conversion adapter model	MELSEC-A series module model	No. of channels	MELSEC-Q series module model
ERNT-AQT68AD	A68AD (Voltage input)	8 channels	Q68ADV
	A68AD (Current input)		Q68ADI
	A68AD-S2 (Voltage input)		Q68ADV
	A68AD-S2 (Current input)		Q68ADI

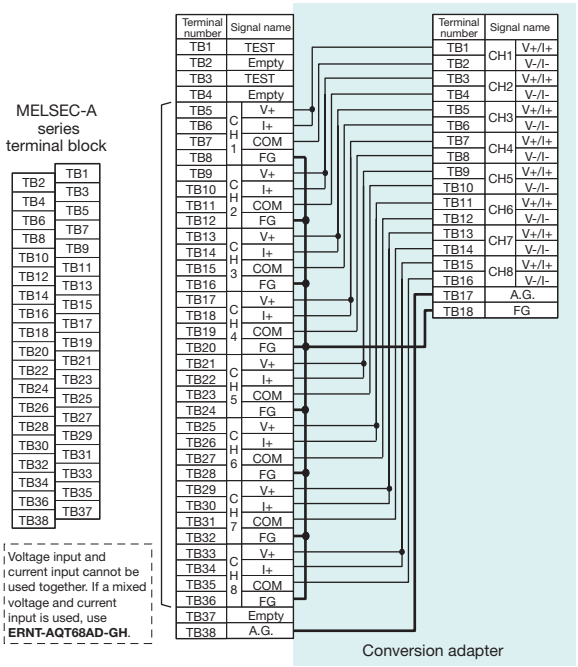

Notes

1. If the module is used with voltage input only or current input only, use **ERNT-AQT68AD**.

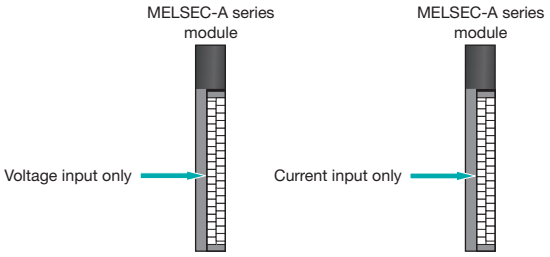

For Q68ADV/Q68ADI analog input, voltage input and current input cannot be used together in a single module. If the module is used with both voltage and current inputs together, use **ERNT-AQT68AD-GH**.

2. Q68ADV/Q68ADI does not have an offset/gain setting terminal. For offset/gain setting, refer to the Q68ADV/Q68ADI user's manual.
3. For detailed and general specifications not described in the specification comparison chart, refer to the user's manual of the module used. Reference to "L (NA) 08046ENG Transition from MELSEC-A/QnA (Large Type) Series to Q Series Handbook" published by Mitsubishi Electric is recommended. Note that the areas where the specifications differ between the MELSEC-A series and the MELSEC-Q series are restricted in terms of specifications during replacement. Verify the specifications of the connected devices.

[Specification comparison chart]

Specification \ Model		MELSEC-A series	MELSEC-Q series	
		A68AD, A68AD-S2	Q68ADV	Q68ADI
Analog input	Voltage	-10 to 0 to 10VDC (Input resistance hardware version K or later: 1MΩ, Hardware version J or before: 30kΩ)	-10 to 0 to 10VDC (Input resistance: 1MΩ)	–
	Current	4 to 20mA (Input resistance 250 Ω)	–	0 to 20mA DC (Input resistance: 250Ω)
Digital output		ACPU: 16-bit signed binary (-2048 to +2047) K2ACPU: 16-bit signed binary (±2047)	16-bit signed binary (Normal resolution mode: -4096 to 4095, High resolution mode: -12288 to 12287, -16384 to 16383)	

I/O characteristics

Analog input	Digital output
+10V	+2000
+5V or +20mA	+1000
0V or +4mA	±0
-5V or -12mA	-1000
-10V	-2000

Analog input range		Normal resolution mod: Digital output value	Normal resolution mod: Maximum resolution	High resolution mode: Digital output value	High resolution mode: Maximum resolution
Voltage	0 to 10V	0 to 4000	2.5mV	0 to 16000	0.625mV
	0 to 5V		1.25mV	0 to 12000	0.416mV
	1 to 5V		1.0mV		0.333mV
	-10 to 10V	-4000 to 4000	2.5mV	-16000 to 16000	0.625mV
	User range setting		0.375mV	-12000 to 12000	0.333mV
Current	0 to 20mA	0 to 4000	5μA	0 to 12000	1.66μA
	4 to 20mA		4μA		1.33μA
	User range setting	-4000 to 4000	1.37μA	-12000 to 12000	1.33μA

Maximum resolution	Voltage: 5mV (1/2000) Current: 20μA (1/1000)

Overall accuracy	±1.0%

Analog input range		Normal resolution mod: Ambient temperature 0 to 55°C, With temperature drift correction	Normal resolution mod: Ambient temperature 0 to 55°C, No temperature drift correction	Normal resolution mod: Ambient temperature 25±5°C	High resolution mode: Ambient temperature 0 to 55°C, With temperature drift correction	High resolution mode: Ambient temperature 0 to 55°C, No temperature drift correction	High resolution mode: Ambient temperature 25±5°C
Voltage	0 to 10V	±0.3% (±12 digits)	±0.4% (±16 digits)	±0.1% (±4 digits)	±0.3% (±48 digits)	±0.4% (±64 digits)	±0.1% (±16 digits)
	-10 to 10V						
	0 to 5V						
	1 to 5V						
	User range setting				±0.3% (±36 digits)	±0.4% (±48 digits)	±0.1% (±12 digits)
Current	0 to 20mA						
	4 to 20mA						
	User range setting						

Maximum conversion speed		2.5ms/channel	80μs/channel (Add 160μs regardless of the number of channels used when temperature drift correction is used.)
Absolute maximum input	Voltage	±15V	±15V
	Current	±30mA	±30mA
No. of analog input points		8 channels/module	8 channels/module
Isolation method	Between input terminal and programmable controller power supply	Photocoupler isolation	Photocoupler isolation
	Between channels	Non-isolated	Non-isolated
No. of occupied points		32 points	16 points
Connected terminal block		38-point terminal block	18-point terminal block
Current consumption		Hardware version K or later: 0.39A Hardware version J or before: 0.9A	0.64A

●Program precautions

1) With A68AD/A68AD-S2 and Q68ADV/Q68ADI, the input/output signals (X, Y) and buffer memory address assignments differ. The sequence program needs to be changed.
2) Q68ADV/Q68ADI has a faster conversion speed than A68AD/A68AD-S2. As a result, the possibility exists that noise not introduced in A68AD/A68AD-S2 will be introduced as analog signals in Q68ADV/Q68ADI. In such a case, use an averaging processing function to remove the impact of the noise.

2) ERNT-AQT68ADN Terminal block (38P)→Terminal block (18P)

Conversion adapter model	MELSEC-A series module model	No. of channels	MELSEC-Q series module model
ERNT-AQT68ADN	A68ADN (Voltage input)	8 channels	Q68ADV
	A68ADN (Current input)		Q68ADI

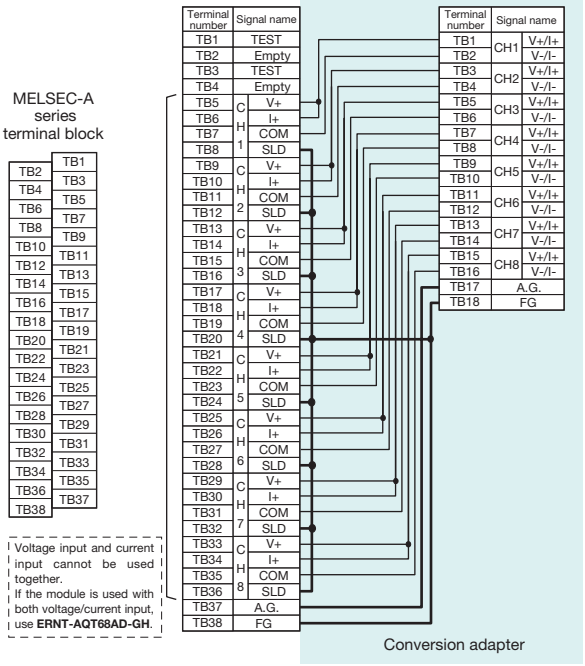

Notes

1. If the module is used with voltage input only or current input only, use **ERNT-AQT68ADN**.

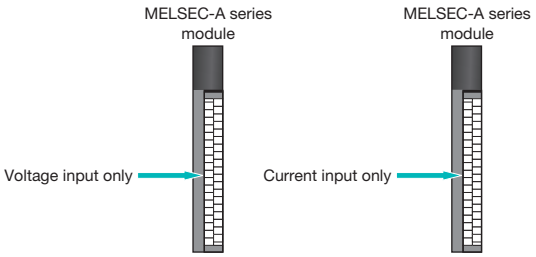

For Q68ADV/Q68ADI analog input, voltage input and current input cannot be used together in a single module. If the module uses both voltage and current inputs together, use **ERNT-AQT68AD-GH**.

2. Q68ADV/A68ADI does not have an offset/gain setting terminal. For offset/gain setting, refer to the Q68ADV/A68ADI user's manual.
3. For detailed and general specifications not described in the specification comparison chart, refer to the user's manual of the module used. Reference to "L (NA) 08046ENG Transition from MELSEC-A/QnA (LargeType) Series to Q Series Handbook" published by Mitsubishi Electric is recommended. Note that the areas where the specifications differ between the MELSEC-A series and the MELSEC-Q series are restricted in terms of specifications during replacement. Verify the specifications of the connected devices.

[Specification comparison chart]

Specification \ Model		MELSEC-A series	MELSEC-Q series	
		A68ADN	Q68ADV	Q68ADI
Analog input	Voltage	-10 to 0 to 10VDC (Input resistance: 1MΩ)	-10 to 10VDC (Input resistance: 1MΩ)	–
	Current	-20 to 0 to 20mA (Input resistance: 250MΩ)	–	0 to 20mA DC (Input resistance: 250Ω)
Digital output		16-bit signed binary When set to 1/4000, -4096 to 4095 When set to 1/8000, -8192 to 8191 When set to 1/12000, -12287 to 12287	16-bit signed binary (Normal resolution mode: -4096 to 4095, High resolution mode: -12288 to 12287, -16384 to 16383)	

I/O characteristics

Analog input	Digital output value (With a 5V/20mA gain and 0V/0mA offset)		
	When set to 1/4000	When set to 1/8000	When set to 1/12000
10V	4000	8000	12000
5V or 20mA	2000	4000	6000
0V or 20mA	0	0	0
-5V or -20mA	-2000	-4000	-6000
-10V	-4000	-8000	-12000

Analog input range		Normal resolution mode		High resolution mode	
		Digital output value	Maximum resolution	Digital output value	Maximum resolution
Voltage	0 to 10V	0 to 4000	2.5mV	0 to 16000	0.625mV
	0 to 5V		1.25mV	0 to 12000	0.416mV
	1 to 5V		1.0mV		0.333mV
	-10 to 10V	-4000 to 4000	2.5mV	-16000 to 16000	0.625mV
	User range setting		0.375mV	-12000 to 12000	0.333mV
Current	0 to 20mA	0 to 4000	5μA	0 to 12000	1.66μA
	4 to 20mA		4μA		1.33μA
	User range setting	-4000 to 4000	1.37μA	-12000 to 12000	1.33μA

Maximum resolution

	When set to 1/4000	When set to 1/8000	When set to 1/12000
Voltage input	2.5mV	1.25mV	0.83mV
Current input	10μA	5μA	3.33μA

Overall accuracy: ±1.0%

Analog input range		Normal resolution mode			High resolution mode		
		Ambient temperature 0 to 55°C		Ambient temperature 25±5°C	Ambient temperature 0 to 55°C		Ambient temperature 25±5°C
		With temperature drift correction	No temperature drift correction		With temperature drift correction	No temperature drift correction	
Voltage	0 to 10V	±0.3% (±12 digits)	±0.4% (±16 digits)	±0.1% (±4 digits)	±0.3% (±48 digits)	±0.4% (±64 digits)	±0.1% (±16 digits)
	-10 to 10V						
	0 to 5V						
	1 to 5V						
	User range setting				±0.3% (±36 digits)	±0.4% (±48 digits)	±0.1% (±12 digits)
Current	0 to 20mA						
	4 to 20mA						
	User range setting						

Maximum conversion speed		20ms/channel	80μs/channel (Add 160μs regardless of the number of channels used when temperature drift correction is used.)
Absolute maximum input	Voltage	±15V	±15V
	Current	±30mA	±30mA
No. of analog input points		8 channels/module	8 channels/module
Isolation method	Between input terminal and programmable controller power supply	Photocoupler isolation	Photocoupler isolation
	Between channels	Non-isolated	Non-isolated
No. of occupied points		32 points	16 points
Connected terminal block		38-point terminal block	18-point terminal block
Current consumption		0.4A	0.64A

●Program precautions

1) With A68ADN and Q68ADV/Q68ADI, the input/output signals (X, Y) and buffer memory address assignments differ. The sequence program needs to be changed.
2) Q68ADV/Q68ADI has a faster conversion speed than A68ADN, resulting in the possibility that noise not introduced in A68ADN will be introduced as analog signals in Q68ADV/Q68ADI. In such a case, use an averaging processing function to remove the impact of the noise.

3) ERNT-AQT62DA Terminal block (20P)→Terminal block (18P)

Conversion adapter model	MELSEC-A series module model	No. of channels	MELSEC-Q series module model
ERNT-AQT62DA	A62DA A62DA-S1	2 channels	Q62DAN

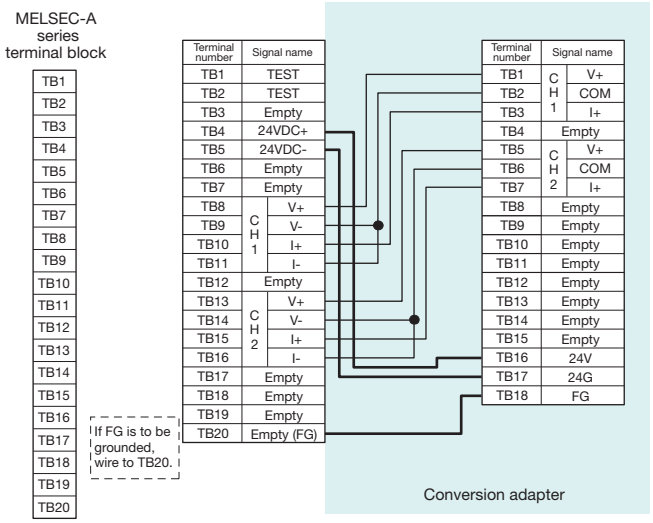

Notes

1. If you want to ground the FG terminal (terminal number TB18) on the Q62DAN side, perform grounding using terminal number TB20 on the MELSEC-A series side.

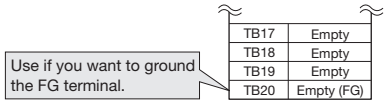

2. Q62DAN does not have an offset/gain setting terminal. For offset/gain setting, refer to the Q62DAN user's manual.
3. For detailed and general specifications not described in the specification comparison chart, refer to the user's manual of the module used. Reference to "L (NA) 08046ENG Transition from MELSEC-A/QnA (Large -Type) Series to Q Series Handbook" published by Mitsubishi Electric is recommended. Note that the areas where the specifications differ between the MELSEC-A series and the MELSEC-Q series are restricted in terms of specifications during replacement. Verify the specifications of the connected devices.

[Specification comparison chart]

Specification \ Model		MELSEC-A series		MELSEC-Q series
		A62DA	A62DA-S1	Q62DAN
Digital input		16-bit signed binary (Voltage: -2000 to 2000, Current: -1000 to 1000)	16-bit signed binary (0 to 4000)	16-bit signed binary (Normal resolution mode: -4096 to 4095, High resolution mode: -12288 to 12287, -16384 to 16383)
Analog output	Voltage	-10 to 0 to 10VDC (External load resistance value: 500Ω to 1MΩ)	0 to 10VDC (External load resistance value: 500Ω to 1MΩ)	-10 to 10VDC (External load resistance value: 1KΩ to 1MΩ)
	Current	4 to 20mA DC (External load resistance value: 0Ω to 600Ω)	4 to 20mA DC (External load resistance value: 0Ω to 600Ω)	0 to 20mA DC (External load resistance value: 0Ω to 600Ω)
I/O characteristics		Digital input: 2000 / 1000 / 0 / -1000 / -2000 Analog output (Voltage): 10V / 5V / 0V / -5V / -10V Analog output (Current): – / 20mA / 4mA / -12mA / –	Output range: 0 to 10V / 0 to 5V / 0 to 20mA / 1 to 5V / 4 to 20mA Digital input: 4000 / 4000 / 0 / 4000 / 0 Analog output: 10V / 5V or 20mA / 0V or 0mA / 5V or 20mA / 1V or 4mA	Analog output range / Normal resolution mode (Digital input value / Maximum resolution) / High resolution mode (Digital input value / Maximum resolution) Voltage: 0 to 5V: 0 to 4000, 1.25mV / 0 to 12000, 0.416mV Voltage: 1 to 5V: 0 to 4000, 1.0mV / 0 to 12000, 0.333mV Voltage: -10 to 10V: -4000 to 4000, 2.5mV / -16000 to 16000, 0.625mV Voltage: User range setting: -4000 to 4000, 0.75mV / -12000 to 12000, 0.333mV Current: 0 to 20mA: 0 to 4000, 5μA / 0 to 12000, 1.66μA Current: 4 to 20mA: 0 to 4000, 4μA / 0 to 12000, 1.33μA Current: User range setting: -4000 to 4000, 1.5μA / -12000 to 12000, 0.83μA
Maximum resolution		Voltage: 5mV (1/2000) Current: 20μA (1/1000)	Voltage: 1 to 5V: 1mV (1/4000); 0 to 5V: 1.25mV (1/4000); 0 to 10V: 2.5mV (1/4000) Current: 4 to 20mA: 4μA (1/4000); 0 to 20mA: 5μA (1/4000)	
Overall accuracy		±1.0%	Output range: 1 to 5V / 0 to 5V / 0 to 10V / 4 to 20mA / 0 to 20mA 25°C (within ±0.5%): ±25 mV / ±25 mV / ±50 mV / ±0.1 mA / ±0.1 mA 0 to 55°C (within ±1%): ±50 mV / ±50 mV / ±100 mV / ±0.2 mA / ±0.2 mA	At an ambient temperature of 25±5°C, within ±0.1% (Voltage: ±10mV, Current: ±20μA) At an ambient temperature of 0 to 55°C, within ±0.3% (Voltage: ±30mV, Current: ±60μA)
Maximum conversion speed		Within 15ms / 2 channels (Same for 1 channel)	Within 15ms / 2 channels (Same for 1 channel)	80μs/channel
Absolute maximum output	Voltage	±12V	0 to 12V	±12V
	Current	28mA	0 to 28mA	21mA
No. of analog output points		2 channels/module	2 channels/module	2 channels/module
Isolation method	Between output terminal and programmable controller power supply	Photocoupler isolation	Photocoupler isolation	Photocoupler isolation
	Between channels	Non-isolated	Non-isolated	Non-isolated
	Between external power supply and analog output	–	–	Transformer isolation
No. of occupied points		32 points	32 points	16 points
Connected terminal block		20-point terminal block	20-point terminal block	18-point terminal block
Current consumption		0.60A	0.60A	0.33A
External power supply	Voltage	21.6 to 26.4VDC	21.6 to 26.4VDC	24VDC +20%, -15%
	Current	0.35A	0.35A	0.15A

●Program precautions
With A62DA/A62DA-S1 and Q62DAN, the input/output signals (X, Y) and buffer memory address assignments differ. The sequence program needs to be changed.

4) ERNT-AQT68DA Terminal block (38P)→Terminal block (18P)

Conversion adapter model	MELSEC-A series module model	No. of channels	MELSEC-Q series module model
ERNT-AQT68DA	A68DAV	8 channels	Q68DAVN
	A68DAI		Q68DAIN
	A68DAI-S1		

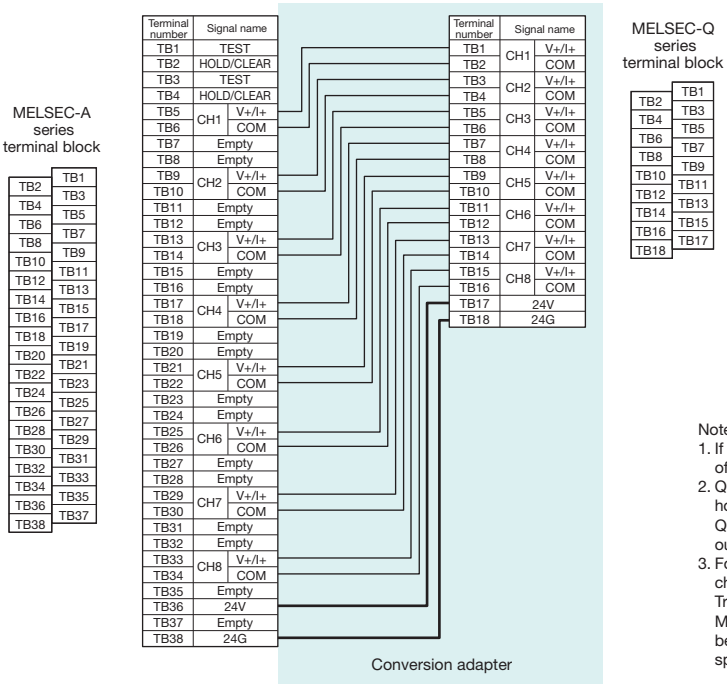

Notes
1. If you want to ground FG to Q68DAVN/Q68DAIN, perform grounding from the FG terminal of Q68DAVN/Q68DAIN.
2. Q68DAVN/Q68DAIN does not have an offset/gain setting terminal or analog output hold/clear setting terminal. Analog output hold/clear setting needs to be performed using Q68DAVN/Q68DAIN intelligent function module switch settings. For offset/gain analog output hold/clear setting, refer to the Q68DAVN/A68DAIN user's manual.
3. For detailed and general specifications not described in the specification comparison chart, refer to the user's manual of the module used. Reference to "L (NA) 08046ENG Transition from MELSEC-A/QnA (Large Type) Series to Q Series Handbook" published by Mitsubishi Electric is recommended. Note that the areas where the specifications differ between the MELSEC-A series and the MELSEC-Q series are restricted in terms of specifications during replacement. Verify the specifications of the connected devices.

[Specification comparison chart]

<table>
<tr><th colspan="3">Model / Specification</th><th colspan="5">MELSEC-A series</th><th colspan="6">MELSEC-Q series</th></tr>
<tr><th colspan="3"></th><th colspan="5">A68DAV</th><th colspan="6">Q68DAVN</th></tr>
<tr><td colspan="3">Digital input</td><td colspan="5">16-bit signed binary
(-4000 to 4000, -8000 to 8000, -12000 to 12000)</td><td colspan="6">16-bit signed binary
(Normal resolution mode: -4096 to 4095,
High resolution mode: -12288 to 12287, -16384 to 16383)</td></tr>
<tr><td colspan="3">Analog output</td><td colspan="5">-10 to 0 to 10VDC (External load resistance: 2kΩ to 1MΩ)</td><td colspan="6">-10 to 10VDC (External load resistance value: 1KΩ to 1MΩ)</td></tr>
<tr><td colspan="3" rowspan="8">I/O characteristics</td><td colspan="2" rowspan="2"></td><td colspan="3">Digital value resolution</td><td rowspan="2">Analog output value</td><td colspan="2" rowspan="2">Analog output range</td><td colspan="2">Normal resolution mode</td><td colspan="2">High resolution mode</td></tr>
<tr><td>1/4000</td><td>1/8000</td><td>1/12000</td><td>Digital input value</td><td>Maximum resolution</td><td>Digital input value</td><td>Maximum resolution</td></tr>
<tr><td colspan="2" rowspan="4">Digital input value</td><td>4000</td><td>8000</td><td>12000</td><td>10V</td><td rowspan="4">Voltage</td><td>0 to 5V</td><td rowspan="2">0 to 4000</td><td>1.25mV</td><td rowspan="2">0 to 12000</td><td>0.416mV</td></tr>
<tr><td>2000</td><td>4000</td><td>6000</td><td>5V</td><td>1 to 5V</td><td>1.0mV</td><td>0.333mV</td></tr>
<tr><td>0</td><td>0</td><td>0</td><td>0V</td><td>-10 to 10V</td><td rowspan="2">-4000 to 4000</td><td>2.5mV</td><td>-16000 to 16000</td><td>0.625mV</td></tr>
<tr><td>-2000</td><td>-4000</td><td>-6000</td><td>-5V</td><td>User range setting</td><td>0.75mV</td><td>-12000 to 12000</td><td>0.333mV</td></tr>
<tr><td>-4000</td><td>-8000</td><td>-12000</td><td>-10V</td><td colspan="6"></td></tr>
<tr><td colspan="6">When the offset value is set to 0V and the gain value is set to 10V</td><td colspan="6"></td></tr>
<tr><td colspan="3">Maximum resolution</td><td colspan="5">2.5mV (1/4000)
1.25mV (1/8000)
0.83mV (1/12000)</td><td colspan="6"></td></tr>
<tr><td colspan="3">Overall accuracy</td><td colspan="5">±1.0%</td><td colspan="6">At an ambient temperature of 25±5°C, within ±0.1%
(Voltage: ±10mV)
At an ambient temperature of 0 to 55°C, within ±0.3%
(Voltage: ±30mV)</td></tr>
<tr><td colspan="3">Maximum conversion speed</td><td colspan="5">Within 40ms / 8 channels
(Same for 1 channel)</td><td colspan="6">80μs/channel</td></tr>
<tr><td colspan="2">Absolute maximum output</td><td>Voltage</td><td colspan="5">-12 to 12V</td><td colspan="6">±12V</td></tr>
<tr><td colspan="3">No. of analog output points</td><td colspan="5">8 channels/module</td><td colspan="6">8 channels/module</td></tr>
<tr><td rowspan="3">Isolation method</td><td colspan="2">Between output terminal and programmable controller power supply</td><td colspan="5">Photocoupler isolation</td><td colspan="6">Photocoupler isolation</td></tr>
<tr><td colspan="2">Between channels</td><td colspan="5">Non-isolated</td><td colspan="6">Non-isolated</td></tr>
<tr><td colspan="2">Between external power supply and analog output</td><td colspan="5">–</td><td colspan="6">Transformer isolation</td></tr>
<tr><td colspan="3">No. of occupied points</td><td colspan="5">32 points</td><td colspan="6">16 points</td></tr>
<tr><td colspan="3">Connected terminal block</td><td colspan="5">38-point terminal block</td><td colspan="6">18-point terminal block</td></tr>
<tr><td colspan="3">Current consumption</td><td colspan="5">0.15A</td><td colspan="6">0.38A</td></tr>
<tr><td colspan="2" rowspan="2">External power supply</td><td>Voltage</td><td colspan="5">21.6 to 26.4 VDC</td><td colspan="6">24VDC +20%, -15%</td></tr>
<tr><td>Current</td><td colspan="5">0.2A</td><td colspan="6">0.2A</td></tr>
</table>

<table>
<tr><td>Model / Specification</td><td colspan="6">MELSEC-A series</td><td colspan="6">MELSEC-Q series</td></tr>
<tr><td></td><td colspan="6">A68DAI (-S1)</td><td colspan="6">Q68DAIN</td></tr>
<tr><td>Digital input</td><td colspan="6">16-bit signed binary
(0 to 4000, 0 to 8000, 0 to 12000)</td><td colspan="6">16-bit signed binary
(Normal resolution mode: -4096 to 4095,
High resolution mode: -12288 to 12287, -16384 to 16383)</td></tr>
<tr><td>Analog output</td><td colspan="6">0 to 20mA DC (External load resistance: 0Ω to 600Ω)</td><td colspan="6">0 to 20mA DC (External load resistance value: 0Ω to 600Ω)</td></tr>
<tr><td rowspan="6">I/O characteristics</td><td colspan="2" rowspan="2"></td><td colspan="3">Digital value resolution</td><td rowspan="2">Analog output value</td><td colspan="2" rowspan="2">Analog output range</td><td colspan="2">Normal resolution mode</td><td colspan="2">High resolution mode</td></tr>
<tr><td>1/4000</td><td>1/8000</td><td>1/12000</td><td>Digital input value</td><td>Maximum resolution</td><td>Digital input value</td><td>Maximum resolution</td></tr>
<tr><td rowspan="3">Digital input value</td><td>4000</td><td>8000</td><td>12000</td><td>20mA</td><td rowspan="3">Current</td><td>0 to 20mA</td><td rowspan="2">0 to 4000</td><td>5μA</td><td>0 to 12000</td><td>1.66μA</td></tr>
<tr><td>2000</td><td>4000</td><td>6000</td><td>12mA</td><td>4 to 20mA</td><td>4μA</td><td rowspan="2">-12000 to 12000</td><td>1.33μA</td></tr>
<tr><td>0</td><td>0</td><td>0</td><td>4mA</td><td>User range setting</td><td>-4000 to 4000</td><td>1.5μA</td><td>0.83μA</td></tr>
<tr><td colspan="6">When the offset value is set to 4mA and the gain value is set to 20mA</td></tr>
<tr><td>Maximum resolution</td><td colspan="6">5.0μA (1/4000)
2.5μA (1/8000)
1.6μA (1/12000)</td><td colspan="6"></td></tr>
<tr><td>Overall accuracy</td><td colspan="6">±1.0%</td><td colspan="6">At an ambient temperature of 25±5°C, within ±0.1%
(Current: ±20μA)
At an ambient temperature of 0 to 55°C, within ±0.3%
(Current: ±60μA)</td></tr>
<tr><td>Maximum conversion speed</td><td colspan="6">Within 40ms / 8 channels
(Same for 1 channel)</td><td colspan="6">80μs/channel</td></tr>
<tr><td colspan="2">Absolute maximum output</td><td>Voltage</td><td colspan="6">0 to 28mA</td><td colspan="6">21mA</td></tr>
<tr><td colspan="3">No. of analog output points</td><td colspan="6">8 channels/module</td><td colspan="6">8 channels/module</td></tr>
<tr><td rowspan="3">Isolation method</td><td colspan="2">Between output terminal and programmable controller power supply</td><td colspan="6">Photocoupler isolation</td><td colspan="6">Photocoupler isolation</td></tr>
<tr><td colspan="2">Between channels</td><td colspan="6">Non-isolated</td><td colspan="6">Non-isolated</td></tr>
<tr><td colspan="2">Between external power supply and analog output</td><td colspan="6">–</td><td colspan="6">Transformer isolation</td></tr>
<tr><td colspan="3">No. of occupied points</td><td colspan="6">32 points</td><td colspan="6">16 points</td></tr>
<tr><td colspan="3">Connected terminal block</td><td colspan="6">38-point terminal block</td><td colspan="6">18-point terminal block</td></tr>
<tr><td colspan="3">Current consumption</td><td colspan="6">0.15A</td><td colspan="6">0.38A</td></tr>
<tr><td rowspan="2">External power supply</td><td colspan="2">Voltage</td><td colspan="6">21.6 to 26.4VDC</td><td colspan="6">24VDC +20%, -15%</td></tr>
<tr><td colspan="2">Current</td><td colspan="6">0.4A</td><td colspan="6">0.27A</td></tr>
</table>

●Program precautions

With A68DAV/A68DAI/A68DAI-S1 and Q68DAVN/Q68DAIN, the input/output signals (X, Y) and buffer memory address assignments differ. The sequence program needs to be changed.

2-slot type (Not applicable to Mitsubishi Electric Q series large type base units)

1) ERNT-AQT68AD-GH Terminal block (38P)→Terminal block (18P)×2

Conversion adapter model	MELSEC-A series module model	No. of channels	MELSEC-Q series module model	No. of required modules
ERNT-AQT68AD-GH	A68AD (Voltage/Current mixed input) A68AD-S2 (Voltage/Current mixed input) A68ADN (Voltage/Current mixed input)	8 channels	Q64AD-GH	2

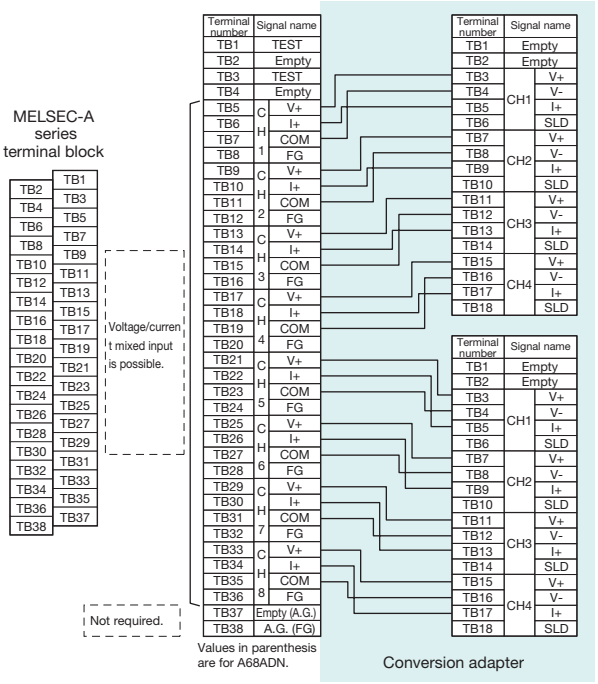

Notes

1. For analog input, voltage/current mixed input is possible.

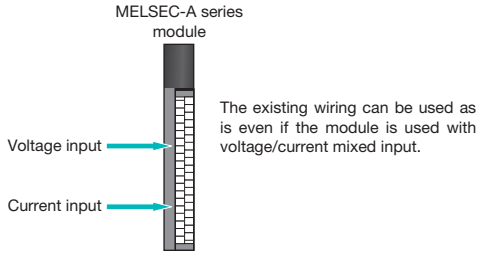

2. When replacing A68AD, A68AD-S2 with Q64AD-GH (two modules), the AG connected to terminal number TB38 on the MELSEC-A series side is not required.
3. When replacing A68ADN with Q64AD-GH (two modules), the AG connected to terminal number TB37 and the FG connected to terminal number TB38 on the MELSEC-A series side are not required.

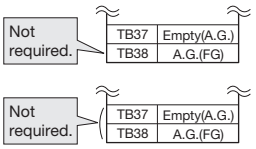

4. Q64AD-GH does not have an offset/gain setting terminal. For offset/gain setting, refer to the Q64AD-GH user's manual.
5. For detailed and general specifications not described in the specification comparison chart, refer to the user's manual of the module used. Reference to "L (NA) 08046ENG Transition from MELSEC-A/QnA (Large Type) Series to Q Series Handbook" published by Mitsubishi Electric is recommended. Note that the areas where the specifications differ between the MELSEC-A series and the MELSEC-Q series are restricted in terms of specifications during replacement. Verify the specifications of the connected devices.

[Specification comparison chart]

Specification \ Model		MELSEC-A series	MELSEC-Q series
		A68AD, A68AD-S2	Q64AD-GH
Analog input	Voltage	-10 to 0 to 10VDC (Input resistance hardware version K or later: 1MΩ, Hardware version J or before: 30kΩ)	-10 to 10 VDC (Input resistance: 1MΩ)
	Current	4 to 20mA (Input resistance: 250Ω)	0 to 20mA DC (Input resistance: 250Ω)
Digital output		ACPU: 16-bit signed binary (-2048 to +2047) K2ACPU: 16-bit signed binary (±2047)	16-bit signed binary (-32768 to 32767) 32-bit signed binary (-65536 to 65535)

I/O characteristics

Analog input	Digital output
+10V	+2000
+5V or +20mA	+1000
0V or +4mA	±0
-5V or -12mA	-1000
-10V	-2000

Analog input range		Maximum resolution 32 bits	Maximum resolution 16 bits	Digital output value (32 bits)	Digital output value (16 bits)
Voltage	0 to 10V	156.3μV	312.6μV	0 to 64000	0 to 32000
	0 to 5V	78.2μV	156.4μV		
	1 to 5V	62.5μV	125.0μV		
	User range setting (Unipolar)	47.4μV	94.8μV		
	-10 to 10V	156.3μV	312.6μV	-64000 to 64000	-32000 to 32000
	User range setting (Bipolar)	47.4μV	94.8μV		
Current	0 to 20mA	312.5nA	625.0nA	0 to 64000	0 to 32000
	4 to 20mA	250.0nA	500.0nA		
	User range setting (Unipolar)	151.6nA	303.2nA		

Specification		MELSEC-A series	MELSEC-Q series
Maximum resolution		Voltage: 5mV (1/2000) Current: 20μA (1/1000)	
Overall accuracy		±1.0%	Reference accuracy: ±0.05% Digital output value (32bits): ±32digits Digital output value (16bits): ±16digits Temperature coefficient: ±71.4ppm/°C (0.00714%/°C)
Maximum conversion speed		2.5ms/channel	10ms/4 channels
Absolute maximum input	Voltage	±15V	±15V
	Current	±30mA	±30mA
No. of analog input points		8 channels/module	4 channels/module
Isolation method	Between input terminal and programmable controller power supply	Photocoupler isolation	Photocoupler isolation
	Between channels	Non-isolated	Transformer isolation
No. of occupied points		32 points	16 points
Connected terminal block		38-point terminal block	18-point terminal block
Current consumption		Hardware version K or later: 0.39A Hardware version J or before: 0.9A	0.89A

Specification \ Model		MELSEC-A series	MELSEC-Q series
		A68ADN	Q64AD-GH
Analog input	Voltage	-10 to 0 to 10VDC (Input resistance: 1MΩ)	-10 to 10VDC (Input resistance: 1MΩ)
	Current	-20 to 0 to 20mA (Input resistance: 250Ω)	0 to 20mA DC (Input resistance: 250Ω)
Digital output		16-bit signed binary When set to 1/4000, -4096 to 4095 When set to 1/8000, -8192 to 8191 When set to 1/12000, -12288 to 12287	16-bit signed binary (-32768 to 32767) 32-bit signed binary (-65536 to 65535)

I/O characteristics

Analog input	Digital output value (With a 5V/20mA gain and 0V/0mA offset)		
	When set to 1/4000	When set to 1/8000	When set to 1/12000
10V	4000	8000	12000
5V or 20mA	2000	4000	6000
0V or 0mA	0	0	0
-5V or -20mA	-2000	-4000	-6000
-10V	-4000	-8000	-12000

Analog input range		Maximum resolution 32 bits	Maximum resolution 16 bits	Digital output value (32 bits)	Digital output value (16 bits)
Voltage	0 to 10V	156.3μV	312.6μV	0 to 64000	0 to 32000
	0 to 5V	78.2μV	156.4μV		
	1 to 5V	62.5μV	125.0μV		
	User range setting (Unipolar)	47.4μV	94.8μV		
	-10 to 10V	156.3μV	312.6μV	-64000 to 64000	-32000 to 32000
	User range setting (Bipolar)	47.4μV	94.8μV		
Current	0 to 20mA	312.5nA	625.0nA	0 to 64000	0 to 32000
	4 to 20mA	250.0nA	500.0nA		
	User range setting (Unipolar)	151.6nA	303.2nA		

Maximum resolution

	When set to 1/4000	When set to 1/8000	When set to 1/12000
Voltage input	2.5mV	1.25mV	0.83mV
Current input	10μA	5μA	3.33μA

Specification \ Model		MELSEC-A series	MELSEC-Q series
		A68ADN	Q64AD-GH
Overall accuracy		Within ±1.0%	Reference accuracy: ±0.05% Digital output value (32bits): ±32digits Digital output value (16bits): ±16digits Temperature coefficient: ±71.4ppm/°C (0.00714%/°C)
Maximum conversion speed		20ms/channel	10ms/4 channels
Absolute maximum output	Voltage	±15V	±15V
	Current	±30mA	±30mA
No. of analog input points		8 channels/module	4 channels/module
Isolation method	Between input terminal and programmable controller power supply	Photocoupler isolation	Photocoupler isolation
	Between channels	Non-isolated	Transformer isolation
No. of occupied points		32 points	16 points
Connected terminal block		38-point terminal block	18-point terminal block
Current consumption		0.4A	0.89A

●Program precautions
With A68AD/A68AD-S2/A68ADN and Q64AD-GH, the input/output signals (X, Y) and buffer memory address assignments differ. The sequence program needs to be changed.

2) ERNT-AQT616AD Terminal block (38P)→Terminal block (18P) × 2

Conversion adapter model	MELSEC-A series module model	No. of channels	MELSEC-Q series module model	No. of required modules
ERNT-AQT616AD	A616AD (Voltage input)	16 channels	Q68ADV	2 modules
	A616AD (Current input)		Q68ADI	

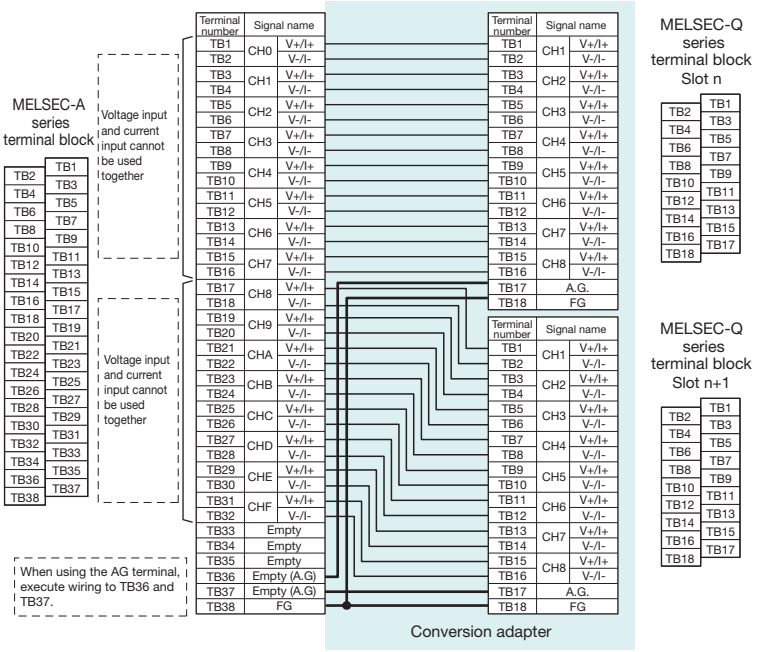

Notes

1. If you want to ground the AG terminal (terminal number TB17) on the MELSEC-Q series side, perform grounding using terminal numbers TB36 and TB37 on the MELSEC-A series side.

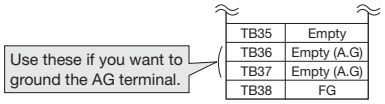

2. With Q68ADV/Q68ADI analog input, voltage and current mixed input cannot be used in a single module. If CH0-7 and CH8-F on the MELSEC-A series side are used with both voltage and current inputs mixed together, this product cannot be used.
3. For detailed and general specifications not described in the specification comparison chart, refer to the user's manual of the module used. Reference to "L (NA) 08046ENG Transition from MELSEC-A/QnA (Large Type) Series to Q Series Handbook" published by Mitsubishi Electric is recommended. Note that the areas where the specifications differ between the MELSEC-A series and the MELSEC-Q series are restricted in terms of specifications during replacement. Verify the specifications of the connected devices.

[Input module specification comparison chart]

Specification \ Model		MELSEC-A series	MELSEC-Q series	
		A616AD	Q68ADV	Q68ADI
Analog input	Voltage	-10 to 0 to 10VDC (Input resistance: 1MΩ)	-10 to 10VDC (Input resistance: 1MΩ)	-
	Current	-20 to 0 to 20mA (Input resistance: 250MΩ)	-	0 to 20mA DC (Input resistance: 250Ω)
Digital output		16-bit signed binary (data part: 12 bits) (-48 to 4047, -2048 to 2047) Configurable for each channel	16-bit signed binary (Normal resolution mode: -4096 to 4095, High resolution mode: -12288 to 12287, -16384 to 16383)	

I/O characteristics Maximum resolution

Input	Analog input range	Maximum resolution	Digital output value
Voltage (V)	0 to 10	2.5mV (1/4000)	0 to 4000 -2000 to 2000
	0 to 5	1.25mV (1/4000)	
	1 to 5	1.0mV (1/4000)	
	-10 to 10	5.0mV (1/4000)	
	-5 to 5	2.5mV (1/4000)	
Voltage (mA)	0 to 20	10μA (1/2000)	0 to 2000 -2000 to 0
	0 to 20	5μA (1/4000)	0 to 4000
	4 to 20	4μA (1/4000)	-2000 to 2000
	-20 to 20	20μA (1/2000)	1000 to 3000 -1000 to 1000
	-20 to 20	10μA (1/4000)	0 to 4000 -2000 to 2000

Analog input range		Normal resolution mode: Digital output value	Normal resolution mode: Maximum resolution	High resolution mode: Digital output value	High resolution mode: Maximum resolution
Voltage	0 to 10V	0 to 4000	2.5mV	0 to 16000	0.625mV
	0 to 5V		1.25mV	0 to 12000	0.416mV
	1 to 5V		1.0mV		0.333mV
	-10 to 10V	-4000 to 4000	2.5mV	-16000 to 16000	0.625mV
	User range setting		0.375mV	-12000 to 12000	0.333mV
Current	0 to 20mA	0 to 4000	5μA	0 to 12000	1.66μA
	4 to 20mA		4μA		1.33μA
	User range setting	-4000 to 4000	1.37μA	-12000 to 12000	1.33μA

Overall accuracy

		Normal resolution mode: Ambient temperature 0 to 55°C, With temperature drift correction	Normal resolution mode: Ambient temperature 0 to 55°C, No temperature drift correction	Normal resolution mode: Ambient temperature 25±5°C	High resolution mode: Ambient temperature 0 to 55°C, With temperature drift correction	High resolution mode: Ambient temperature 0 to 55°C, No temperature drift correction	High resolution mode: Ambient temperature 25±5°C
0 to 10V, -10 to 10V, -5V to 5V, -20mA to 20mA	±0.3% (Digital value ±12)						
0 to 5V, 1 to 5V, 0 to 20mA, 4mA to 20mA	±0.6% (Digital value ±24)						
Voltage	0 to 10V	±0.3% (±12 digits)	±0.4% (±16 digits)	±0.1% (±4 digits)	±0.3% (±36 digits)	±0.4% (±48 digits)	±0.1% (±12 digits)
	-10 to 10V						
	0 to 5V						
	1 to 5V						
	User range setting						
Current	0 to 20mA						
	4 to 20mA						
	User range setting						

Maximum conversion speed		1ms/channel	80μs/channel (Add 160μs regardless of the number of channels used when temperature drift correction is used.)
Absolute maximum input	Voltage	±15V	±15V
	Current	±30mA	±30mA
No. of analog input points		60 channels/module	8 channels/module
Isolation method	Between input terminal and programmable controller power supply	Photocoupler isolation	Photocoupler isolation
	Between channels	Non-isolated	Non-isolated
No. of occupied points		32 points	16 points
Connected terminal block		38-point terminal block	18-point terminal block
Current consumption		1A	0.64A

●Program precautions

1) With A616AD and Q68ADV/Q68ADI, the input/output signals (X, Y) and buffer memory address assignments differ. The sequence program needs to be changed.
2) Q68ADV/Q68ADI has a faster conversion speed than A616AD. As a result, the possibility exists that noise not introduced in A616AD will be introduced as analog signals in Q68ADV/Q68ADI. In such a case, use an averaging processing function to remove the impact of the noise.

3) ERNT-AQT616DA Terminal block (38P)→Terminal block (18P) × 2

Conversion adapter model	MELSEC-A series module model	No. of channels	MELSEC-Q series module model	No. of required modules
ERNT-AQT616DA	A616DAV	16 channels	Q68DAVN	2 modules
	A616DAI		Q68DAIN	

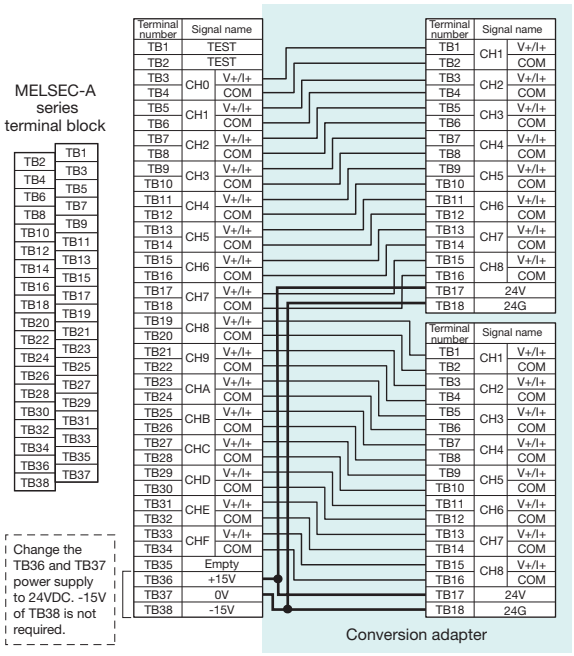

Notes

1. Change the external power supply connected to terminal numbers TB36 and TB37 on the MELSEC-A series side to 24VDC.
2. The -15 V connected to terminal number TB38 on the MELSEC-A series side is not required.
3. Q68DAVN/Q68DAIN does not have an offset/gain setting terminal. For offset/gain setting, refer to the Q68DAVN/Q68DAIN user's manual.
4. For detailed and general specifications not described in the specification comparison chart, refer to the user's manual of the module used. Reference to "L (NA) 08046ENG Transition from MELSEC-A/QnA (Large Type) Series to Q Series Handbook" published by Mitsubishi Electric is recommended. Note that the areas where the specifications differ between the MELSEC-A series and the MELSEC-Q series are restricted in terms of specifications during replacement. Verify the specifications of the connected devices.

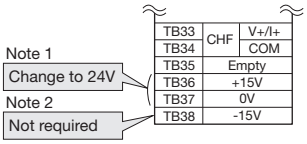

[Specification comparison chart]

Specification \ Model	MELSEC-A series	MELSEC-Q series
	A616DAV	Q68DAVN
Digital input	16-bit signed binary (-4096 to 4095)	16-bit signed binary (Normal resolution mode: -4096 to 4095, High resolution mode: -12288 to 12287, -16384 to 16383)
Analog output	When the output voltage setting is 10V: -10 to 0 to 10VDC (External load resistance value: 2kΩ to 1MΩ); When the output voltage setting is 5V: -5 to 0 to 5V (External load resistance value: 2kΩ to 1MΩ)	-10 to 10VDC (External load resistance value: 1KΩ to 1MΩ)

I/O characteristics

Digital input	Analog output: When set to 5V	Analog output: When set to 10V
4000	5V	10V
2000	2.5V	5V
0	0V	0V
-2000	-2.5V	-5V
-4000	-5V	-10V

Analog output range		Normal resolution mode: Digital input value	Normal resolution mode: Maximum resolution	High resolution mode: Digital input value	High resolution mode: Maximum resolution
Voltage	0 to 5V	0 to 4000	1.25mV	0 to 12000	0.416mV
	1 to 5V		1.0mV		0.333mV
	-10 to 10V	-4000 to 4000	2.5mV	-16000 to 16000	0.625mV
	User range setting		0.75mV	-12000 to 12000	0.333mV

Maximum resolution		1/4000	
Overall accuracy	Output voltage range setting	10V	5V
	Ambient temperature (0 to 55°C)	±0.6% (±60mV)	±0.6% (±30mV)
	Ambient temperature (25°C)	±0.3% (±30mV)	±0.3% (±15mV)
		At an ambient temperature of 25±5°C, within ±0.1% (Voltage: ±10mV); At an ambient temperature of 0 to 55°C, within ±0.3% (Voltage: ±30mV)	
Maximum conversion speed		0.5ms (-10V → 10V / 10V → -10V conversion time)	80μs/channel
Absolute maximum output	Voltage	15V	±12V
No. of analog output points		16 channels/module	8 channels/module
Isolation method	Between output terminal and programmable controller power supply	Photocoupler isolation	Photocoupler isolation
	Between channels	Non-isolated	Non-isolated
	Between external power supply and analog output	–	Transformer isolation
No. of occupied points		32 points	16 points
Connected terminal block		38-point terminal block	18-point terminal block
Current consumption		0.38A	0.39A
External power supply	Voltage	15VDC / -15VDC	24VDC +20%, -15%
	Current	15VDC: 0. 2A, -15VDC: 0.17A	0.2A

●Program precautions

With A616DAV/A616DAI and Q68DAVN/Q68DAIN, the input/output signals (X, Y) and buffer memory address assignments differ. The sequence program needs to be changed.

Specification \ Model		MELSEC-A series	MELSEC-Q series
		A616DAI	Q68DAIN
Digital input		16-bit signed binary (0 to 4095)	16-bit signed binary (Normal resolution mode: -4096 to 4095, High resolution mode: -12288 to 12287, -16384 to 16383)
Analog output		0 to 20mA DC (External load resistance value: 0Ω to 600Ω)	0 to 20mA DC (External load resistance value: 0Ω to 600Ω)
I/O characteristics		Digital input: 4000 / 2000 / 0 — Analog output: 20mA / 12mA / 4mA	Analog output range: Current — 0 to 20mA / 4 to 20mA / User range setting; Normal resolution mode: Digital input value: 0 to 4000 / -4000 to 4000; Maximum resolution: 5μA / 4μA / 1.5μA; High resolution mode: Digital input value: 0 to 12000 / -12000 to 12000; Maximum resolution: 1.66μA / 1.33μA / 0.83μA
Maximum resolution		1/4000	
Overall accuracy		±0.6% When the ambient temperature is 25°C: ±0.3%	At an ambient temperature of 25±5°C, within ±0.1% (Current: ±20μA) At an ambient temperature of 0 to 55°C, within ±0.3% (Current: ±60μA)
Maximum conversion speed		0.5ms (0mA → 20mA, 20mA → 0mA conversion time)	80 μs/channel
Absolute maximum output	Current	–	21mA
No. of analog output points		16 channels/module	8 channels/module
Isolation method	Between output terminal and programmable controller power supply	Photocoupler isolation	Photocoupler isolation
	Between channels	Non-isolated	Non-isolated
	Between external power supply and analog output	–	Transformer isolation
No. of occupied points		32 points	16 points
Connected terminal block		38-point terminal block	18-point terminal block
Current consumption		0.3A	0.38A
External power supply	Voltage	15VDC / -15VDC	24VDC +20%, -15%
	Current	15VDC: 0. 53A, -15VDC: 0.125A	0.27A

For High-Speed Counter Modules

1-slot type (Applicable to Mitsubishi Electric Q series large type base units as well)

1) ERNT-AQTD61 Terminal block (38P)→Connector (40P)

Conversion adapter model	MELSEC-A series module model	No. of channels	MELSEC-Q series module model	No. of required modules
ERNT-AQTD61	AD61	2 channels	QD62-H01	1 module
	AD61-S1		QD62-H02	

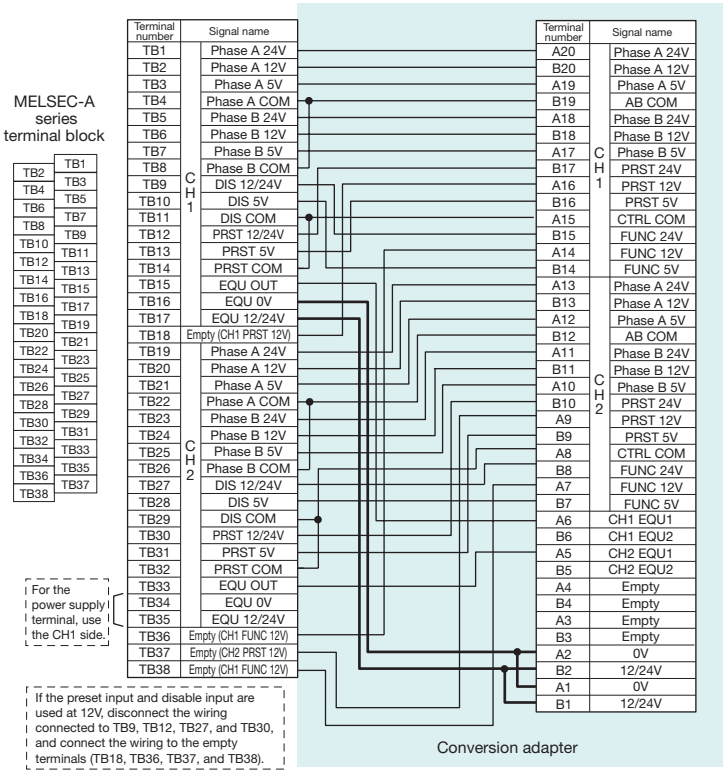

Notes

1. PRST 12/24V (terminal numbers TB12 and TB30) on the MELSEC-A series side are connected to PRST 24V of QD62-H01/-H02. In a case where the preset input is used at 12V, usage is possible by connecting the wiring of PRST 12/24V (terminal numbers TB12 and TB30) to terminal numbers TB18 and TB37. (Refer to the figure below.) Further, the external input specifications differ. External device specifications need to be verified.
2. DIS 12/24V (terminal numbers TB9 and TB27) on the MELSEC-A series side are connected to FUNC 24V of QD62-H01/-H02. In a case where the disable input is used at 12V, usage is possible by connecting the wiring of DIS 12/24V (terminal numbers TB9 and TB27) to terminal numbers TB36 and TB38. (Refer to the figure below.) Further, the external input specifications differ. External device specifications need to be verified.

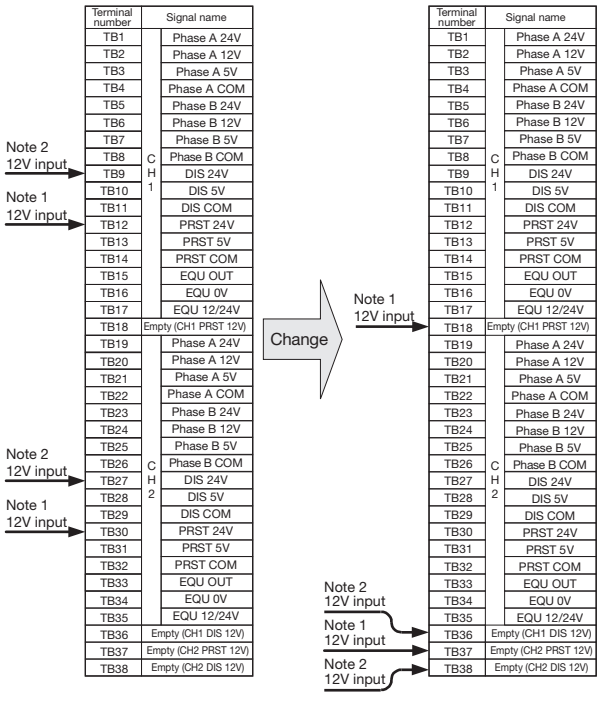

3. Use the CH1-side (terminal numbers TB17 and TB16) only for the external power supply for AD61 coincidence output. When the CH2-side external power supply (terminal numbers TB35 and TB34) is used, the wiring needs to be changed. (Refer to the figure below.) Further, in a case where the CH1-side external power supply (terminal numbers TB17 and TB16) and the CH2-side external power supply (terminal numbers TB35 and TB34) are used as separate power supplies, the power supplies need to be changed to the same power supply.

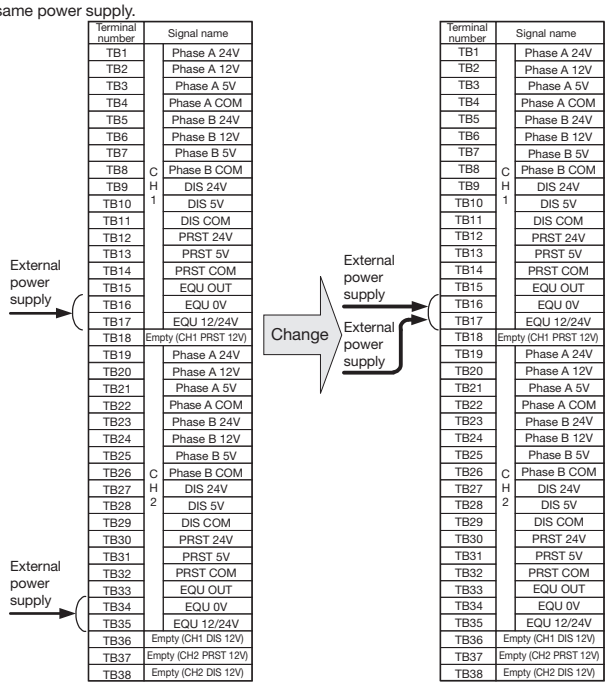

4. For detailed and general specifications not described in the specification comparison chart, refer to the user's manual of the module used. Reference to "L (NA) 08046ENG Transition from MELSEC-A/QnA (Large Type) Series to Q Series Handbook" published by Mitsubishi Electric is recommended. Note that the areas where the specifications differ between the MELSEC-A series and the MELSEC-Q series are restricted in terms of specifications during replacement. Verify the specifications of the connected devices.

[Input module specification comparison chart]

Specification \ Model			MELSEC-A series	MELSEC-Q series
			AD61	QD62-H01
No. of channels			2 channels	2 channels
Counting speed setting			-	-
Performance specifications per channel	Count input signal	Phase	1-phase input, 2-phase input	1-phase input, 2-phase input
		Signal level (ΦA, ΦB)	5/12/24VDC, 2 to 5mA	5/12/24VDC, 2 to 5mA
	Counter	Maximum counting speed	1-phase input: 50kPPS 2-phase input: 50kPPS	1-phase input: 50kPPS 2-phase input: 50kPPS
		Counting range	24-bit binary (0 to 16777215)	32-bit signed binary (-2147483648 to 2147483647)
		Model	UP/DOWN preset counter + Ring counter function	UP/DOWN preset counter + Ring counter function
	Size comparison	Comparison range	Binary format (binary): 24-bit	32-bit signed binary
		Comparison result	Setting value < Count value Setting value = Count value Setting value > Count value	Setting value < Count value Setting value = Count value Setting value > Count value
	External input	Preset	12/24VDC, 3/6mA 5VDC, 5mA	5/12/24VDC, 2 to 5mA
		Count disable	12/24VDC, 3/6mA 5VDC, 5mA	-
		Function start	-	5/12/24VDC, 2 to 5mA
	External output	Coincidence output	Transistor output 12/24VDC, 0.5A	Transistor output 12/24VDC, 0.5A/point 2A/common
No. of occupied points			32 points	16 points
Current consumption			0.30A	0.30A

Specification \ Model			MELSEC-A series	MELSEC-Q series
			AD61-S1	QD62-H02
No. of channels			2 channels	2 channels
Counting speed setting			-	-
Performance specifications per channel	Count input signal	Phase	1-phase input, 2-phase input	1-phase input, 2-phase input
		Signal level (ΦA, ΦB)	5/12/24VDC, 2 to 5mA	5/12/24VDC, 2 to 5mA
	Counter	Maximum counting speed	1-phase input: 10kPPS 2-phase input: 7kPPS	1-phase input: 10kPPS 2-phase input: 7kPPS
		Counting range	24-bit binary (0 to 16777215)	32-bit binary (-2147483648 to 2147483647)
		Model	UP/DOWN preset counter + Ring counter function	UP/DOWN preset counter + Ring counter function
	Size comparison	Comparison range	Binary format (binary): 24-bit	32-bit signed binary
		Comparison result	Setting value < Count value Setting value = Count value Setting value > Count value	Setting value < Count value Setting value = Count value Setting value > Count value
	External input	Preset	12/24VDC, 3/6mA 5VDC, 5mA	5/12/24VDC, 2 to 5mA
		Count disable	12/24VDC, 3/6mA 5VDC, 5mA	-
		Function start	-	5/12/24VDC, 2 to 5mA
	External output	Coincidence output	Transistor output 12/24VDC, 0.5A	Transistor output 12/24VDC, 0.5A/point 2A/common
No. of occupied points			32 points	16 points
Current consumption			0.30A	0.30A

●Program precautions
With AD61/AD61-S1 and QD62-H01/QD62-H02, the input/output signals (X, Y) and buffer memory address assignments differ. The sequence program needs to be changed.

Base Adapter

Specifications

The base adapter allows installation of the MELSEC-Q series and conversion adapter support flange using the mounting holes for the MELSEC-A series base unit (additional drilling of holes is not required).

Base adapter model	Specifications		
	MELSEC-A series compatible module	MELSEC-Q series compatible module	Mountable conversion adapter support flange
ERNT-AQB38	A38B, A38B-UL A38HB A38HBEU, A38B-E	Q312B	**ERNT-AQF12** **ERNT-AQF8**
		Q38B	**ERNT-AQF8**
ERNT-AQB68	A68B, A68B-UL	Q612B	**ERNT-AQF12** **ERNT-AQF8**
		Q68B	**ERNT-AQF8**
ERNT-AQB58	A58B, A58B-UL	Q68B	**ERNT-AQF8**
ERNT-AQB35	A35B, A35B-UL A35B-E	Q38B	**ERNT-AQF8** **ERNT-AQF5**
		Q35B	**ERNT-AQF5**
ERNT-AQB65	A65B, A65B-UL	Q68B	**ERNT-AQF8** **ERNT-AQF5**
		Q65B Q55B	**ERNT-AQF5**
ERNT-AQB55	A55B, A55B-UL	Q65B Q55B	**ERNT-AQF5**
ERNT-AQB32	A32B, A32B-UL A32B-E	Q33B	**ERNT-AQF3**
ERNT-AQB62	A62B	Q63B Q52B	**ERNT-AQF3**
ERNT-AQB52	A52B	Q52B	**ERNT-AQF3**

Mounting Dimensions

- The base adapter longitudinal dimension is smaller than that of the MELSEC-A series.
  (For module width and depth dimensions, refer to the “Usage Precautions” on page 1-30.)
- The base adapter mounting holes (four) share the same dimensions as those for the MELSEC-A series base unit. There is no need to drill additional holes on the control panel.
- When replacing the MELSEC-A series with the MELSEC-Q series, the slot positions where the module is mounted are different. Adjust the wiring length prior to use.

◎ MELSEC-Q series

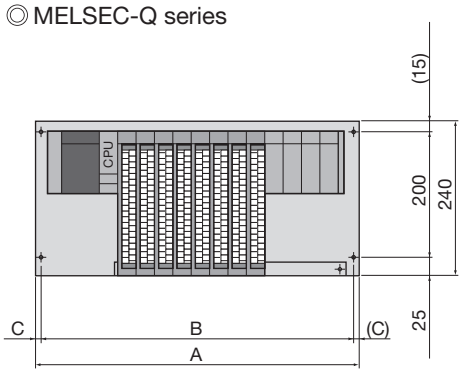

◎ (Reference) MELSEC-A series

Unit: mm

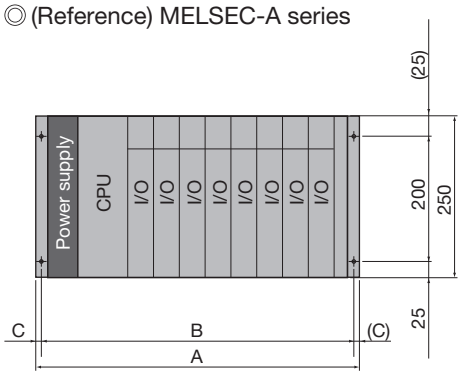

Base adapter model	A	B	C	MELSEC-A series base unit model	A	B	C
ERNT-AQB38	480	460	10	A38B (-UL/-E), A38HB (EU)	480	460	10
ERNT-AQB68	466	446	10	A68B (-UL)	466	446	10
ERNT-AQB58	411	391	10	A58B (-UL)	411	391	10
ERNT-AQB35	382	362	10	A35B (-UL/-E)	382	362	10
ERNT-AQB65	352	332	10	A65B (-UL)	352	332	10
ERNT-AQB55	297	277	10	A55B (-UL)	297	277	10
ERNT-AQB32	247	227	10	A32B (-UL/-E)	247	227	10
ERNT-AQB62	238	218	10	A62B	238	218	10
ERNT-AQB52	183	163	10	A52B	183	163	10

When Not Using a Base Adapter

When a base adapter is not used, screw holes (M4 × 2) need to be provided to mount the conversion adapter support flange as shown below. The conversion adapter support flange must be mounted.

When using a main base unit

◎With Q312B, Q38B, Q35B, and Q33B

Unit: mm

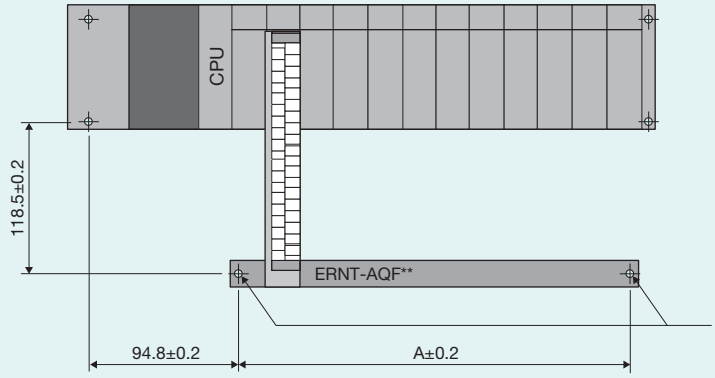

Conversion adapter support flange	A
ERNT-AQF12	321.2
ERNT-AQF8	210
ERNT-AQF5	126.6
ERNT-AQF3	71

Provide screw holes (M4 × 2) to these locations and mount the conversion adapter support flange here.

When using an extension base unit

◎With Q612B, Q68B, Q65B, and Q63B

Unit: mm

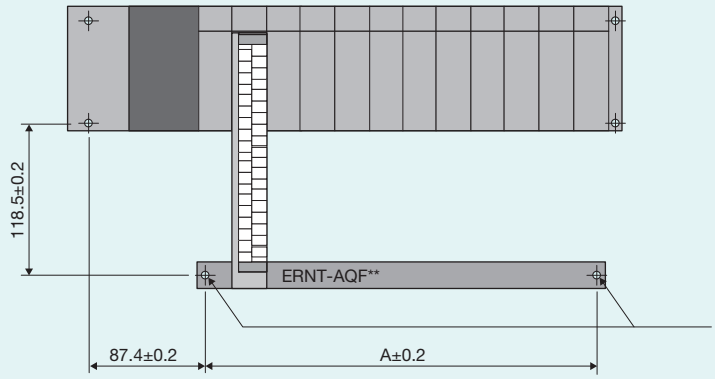

Conversion adapter support flange	A
ERNT-AQF12	321.2
ERNT-AQF8	210
ERNT-AQF5	126.6
ERNT-AQF3	71

Provide screw holes (M4 × 2) to these locations and mount the conversion adapter support flange here.

◎With Q55B

Unit: mm

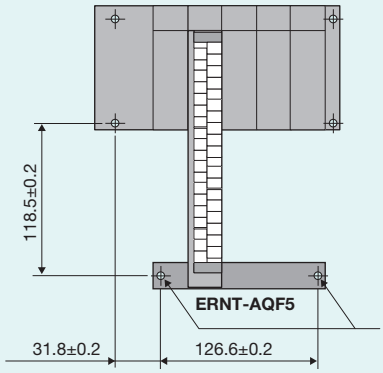

Provide screw holes (M4 × 2) to these locations and mount the conversion adapter support flange here.

◎With Q52B

Unit: mm

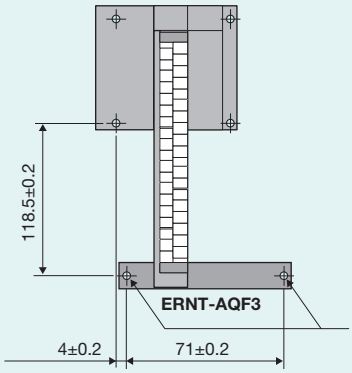

Provide screw holes (M4 × 2) to these locations and mount the conversion adapter support flange here.

Conversion Adapter Support Flange

Specifications

The conversion adapter support flange secures the bottom of the conversion adapter and is thus required during conversion adapter use. One support flange is required per base unit.

Conversion adapter support flange model	Specifications
ERNT-AQF12	Conversion adapter support flange for 12-slot MELSEC-Q series modules
ERNT-AQF8	Conversion adapter support flange for 8-slot MELSEC-Q series modules
ERNT-AQF5	Conversion adapter support flange for 5-slot MELSEC-Q series modules
ERNT-AQF3	Conversion adapter support flange for 3-slot MELSEC-Q series modules

Usage Precautions

The conversion adapter is used to compensate the difference of the pin assignment when the MELSEC-A series large type module is replaced with the MELSEC-Q series module.
When replacing MELSEC-A series with MELSEC-Q series, be sure to refer to the manual of each module of the MELSEC-Q series to verify the differences in performance, function, CPU input/output signals, buffer memory addresses, and the like prior to use.
We also recommend that you refer to the “Transition from MELSEC-A/QnA (Large Type) Series to Q Series Handbook” published by Mitsubishi Electric.

Module Width

1) The module width dimension is smaller (37.5 mm → 27.4 mm) and the wiring area is smaller, requiring verification during mounting.

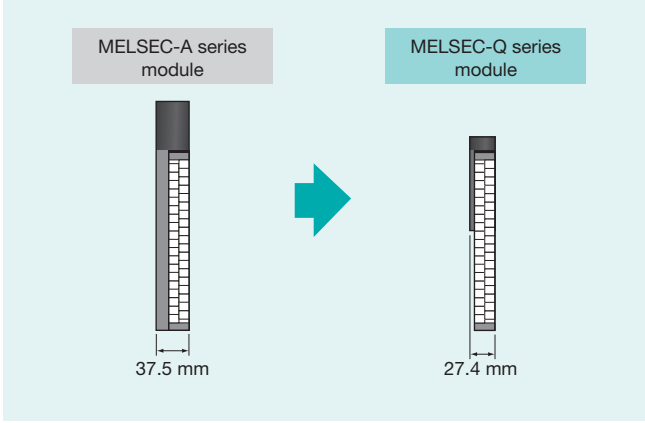

2) If the wiring interferes with a mounted module, lift the wiring forward, etc., so that there is no interference.

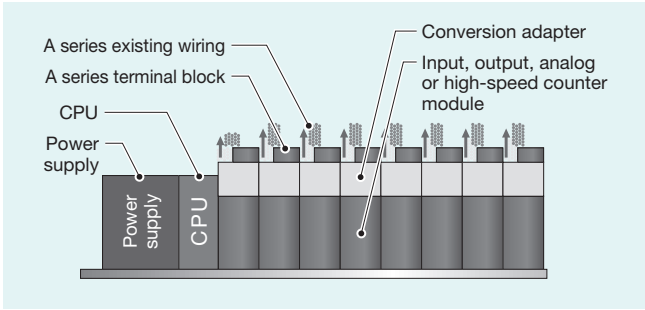

3) If interference still occurs even when you lift the wiring, open up a slot to secure a space for wiring.

Example) Q312B

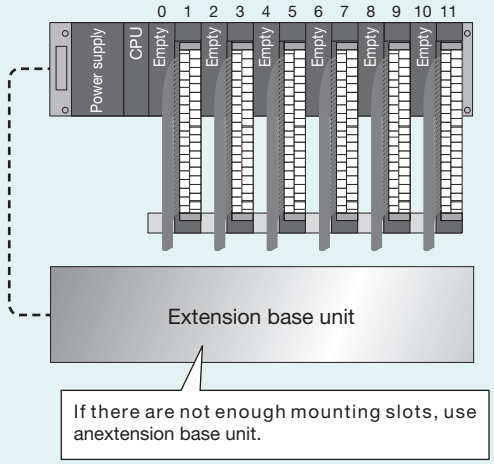

Mount a connector cover (accessory) or blank cover module (QG60) to prevent dust from entering the connector of a sparespace where a module is not mounted.

4) If replacement is not possible based on 2) or 3) on the left, investigate using the Mitsubishi Electric Q series large type base unit. 1-2

Depth

The depth is larger, requiring verification during mounting.

MELSEC-A :MELSEC-A series MELSEC-Q :MELSEC-Q series

Conversion adapter	ERNT-AQTX10 ERNT-AQTX40 ERNT-AQTX80 ERNT-AQTY10 ERNT-AQTY40 ERNT-AQTY50 ERNT-AQTY80	ERNT-AQTY22 ERNT-AQT62DA	ERNT-AQTX41 ERNT-AQTX81 ERNT-AQTY41 ERNT-AQTY81 ERNT-AQTD61
Depth	143.9 mm	166.2 mm	165.3 mm
Mounting diagram	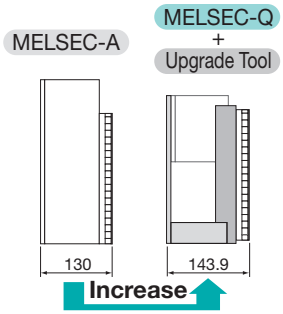	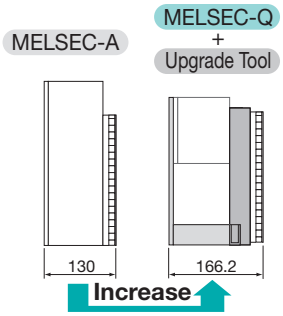	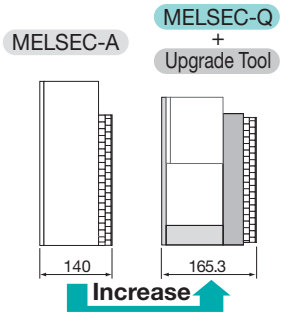

*The above depth is from each panel surface. (MELSEC-A series: Base unit + Input / Output / Analog / High-speed counter module + Terminal block; MELSEC-Q series + Upgrade Tool: Base adapter + Base unit + Input / Output / Analog / High-speed counter module + Conversion adapter + Terminal block)

Conversion adapter	ERNT-AQTX11 ERNT-AQTY10A ERNT-AQTY13 ERNT-AQTY51 ERNT-AQT68AD ERNT-AQT68ADN ERNT-AQT616AD	ERNT-AQTY23 ERNT-AQT68AD-GH ERNT-AQT68DA ERNT-AQT616DA
Depth	153.9 mm	176.2 mm
Mounting diagram	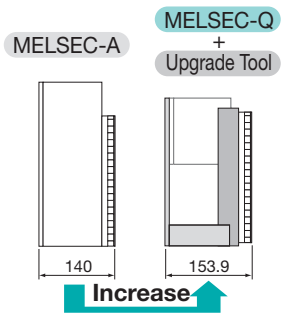	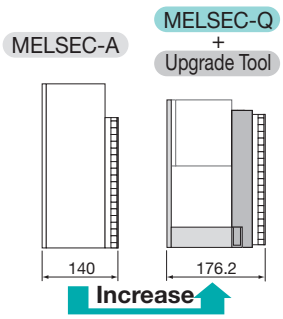

*The above depth is from each panel surface. (MELSEC-A series: Base unit + Input / Output / Analog module + Terminal block; MELSEC-Q series + Upgrade Tool: Base adapter + Base unit + Input / Output / Analog module + Conversion adapter + Terminal block)

Conversion Adapter Support Flange / Base Adapter

When using a conversion adapter, the conversion adapter support flange is required. We recommend use of a base adapter that permits MELSEC-Q series installation using the mounting holes of the MELSEC-A series (additional drilling of holes is not required).

Slot Positions

When you replace the MELSEC-A series with the MELSEC-Q series, the slot positions are different. Change the slot positions where modules are mounted and adjust the wiring lengths prior to use.

1) A38B(-UL/-E)/A38HB(EU)→Q312B, Q38B

Unit: mm

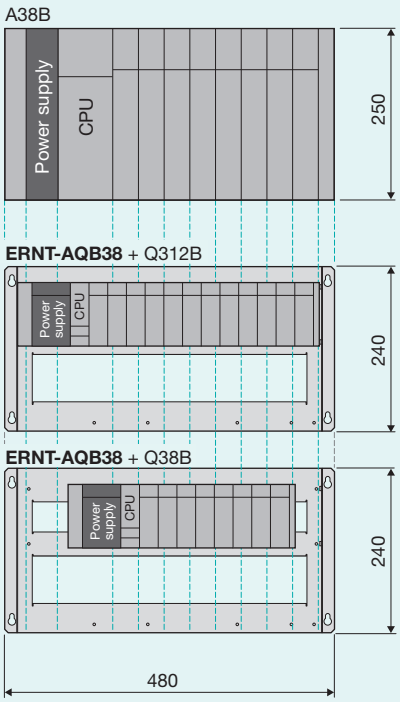

2) A35B(-UL/-E)→Q38B, Q35B

Unit: mm

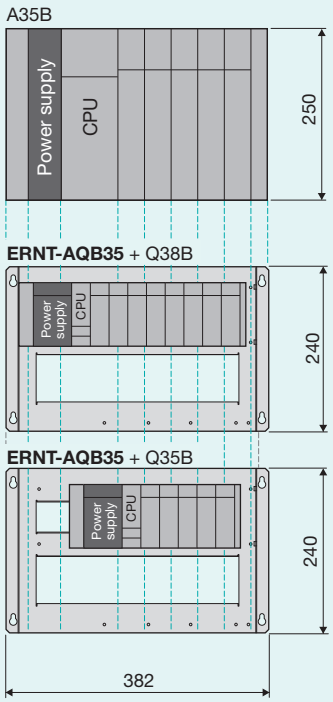

3) A32B(-UL/-E)→Q33B

Unit: mm

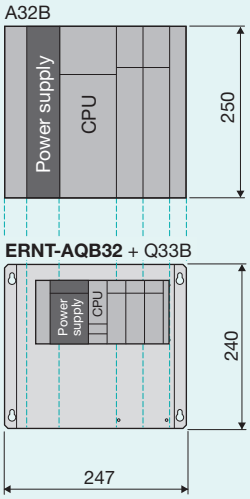

4) A68B(-UL)→Q612B, Q68B

Unit: mm

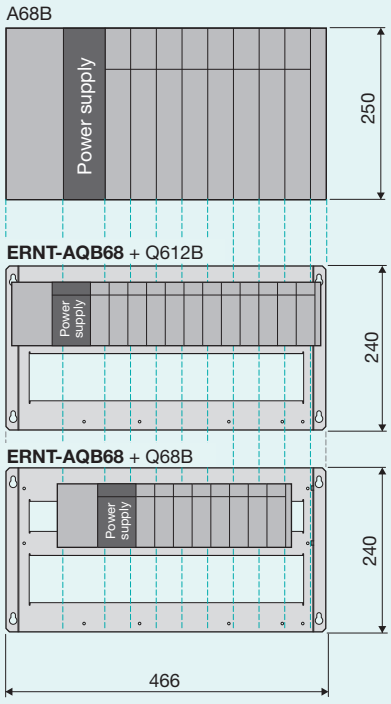

5) A65B(-UL)→Q68B, Q65B, Q55B

Unit: mm

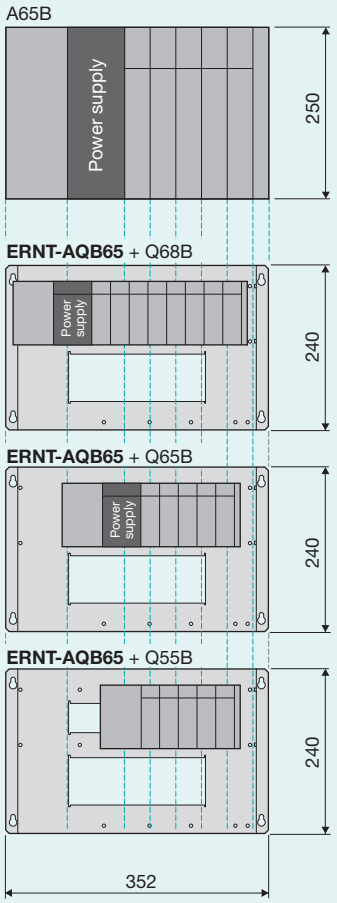

6) A62B→Q63B, Q52B

Unit: mm

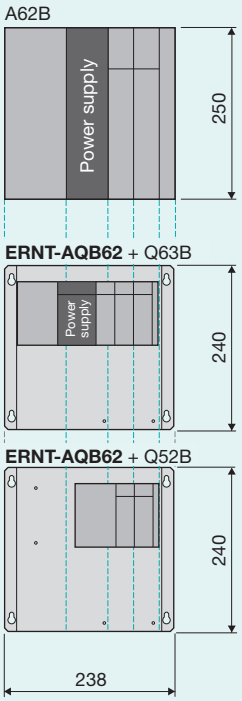

7) A58B(-UL)→Q68B

Unit: mm

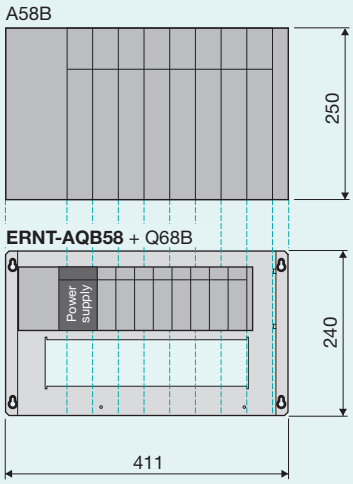

8) A55B(-UL)→Q65B, Q55B

Unit: mm

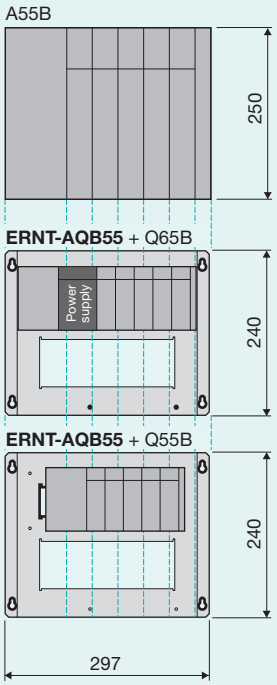

9) A52B→Q52B

Unit: mm

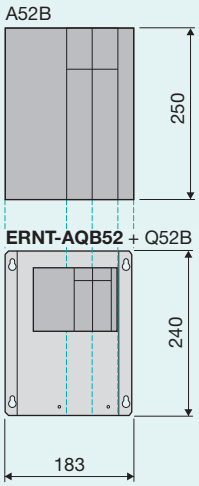

External Dimensions

Conversion Adapter

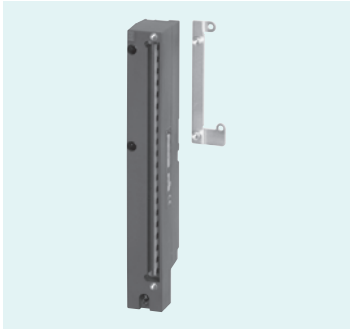

Model names:

ERNT-AQTX10
ERNT-AQTX40
ERNT-AQTX80
ERNT-AQTY10
ERNT-AQTY40
ERNT-AQTY50
ERNT-AQTY80
ERNT-AQT68AD
ERNT-AQT68ADN

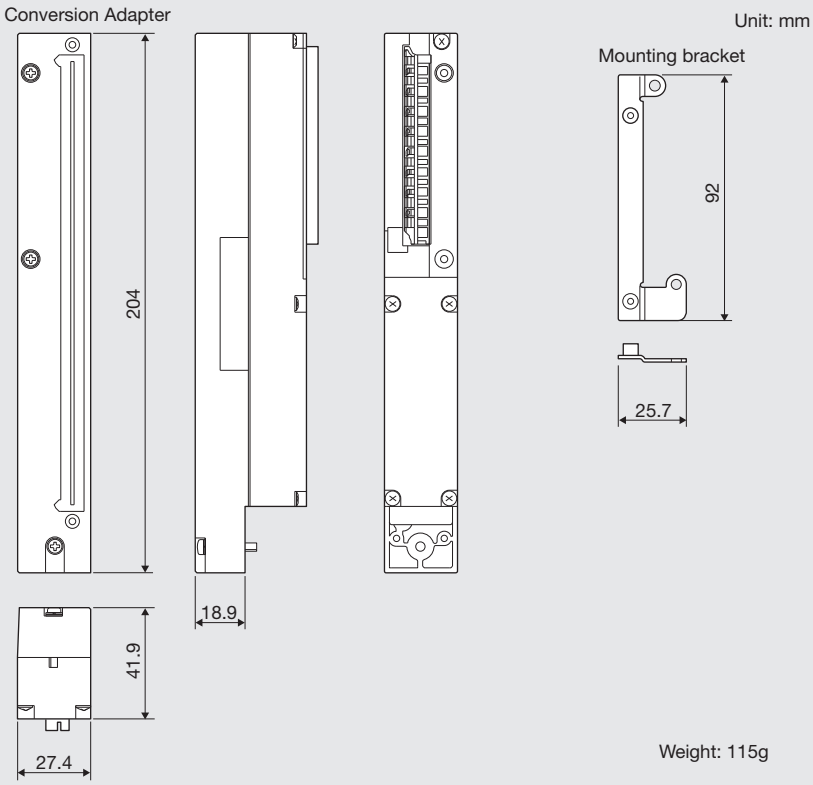

Weight: 115g

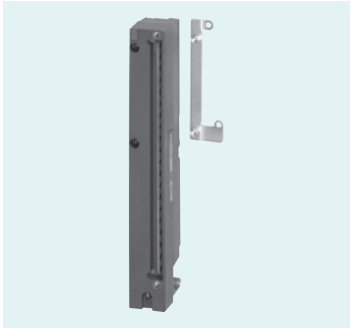

Model names:

ERNT-AQTY22
ERNT-AQT62DA
ERNT-AQT68DA

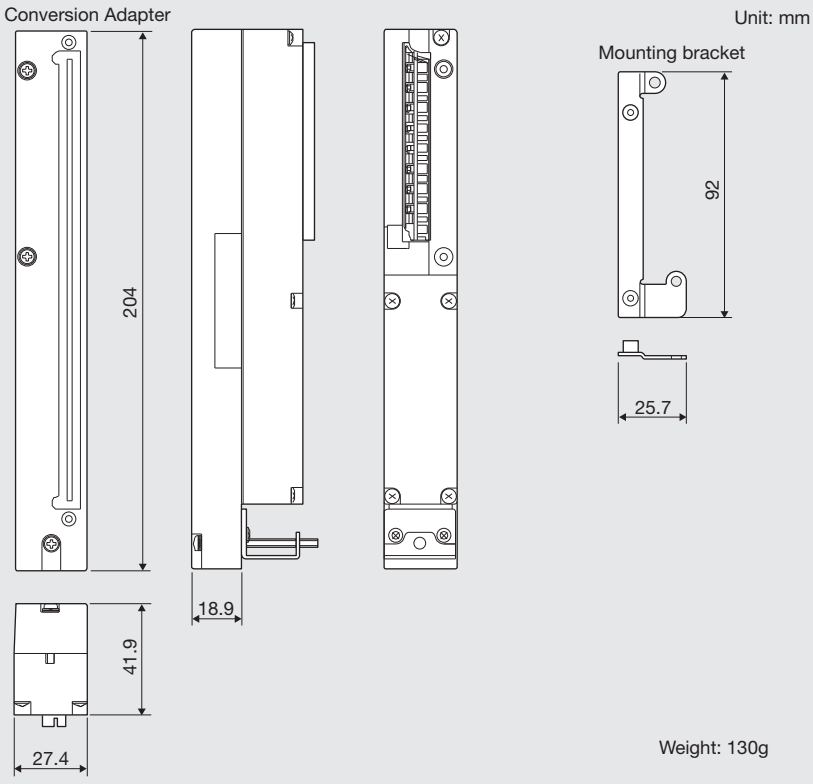

Weight: 130g

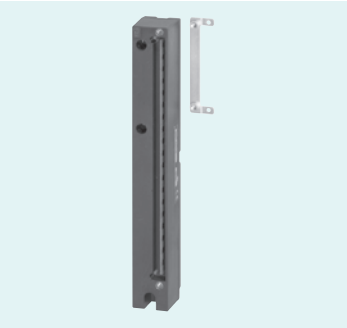

Model names:

ERNT-AQTX41
ERNT-AQTY41
ERNT-AQTD61

Conversion Adapter

Unit: mm

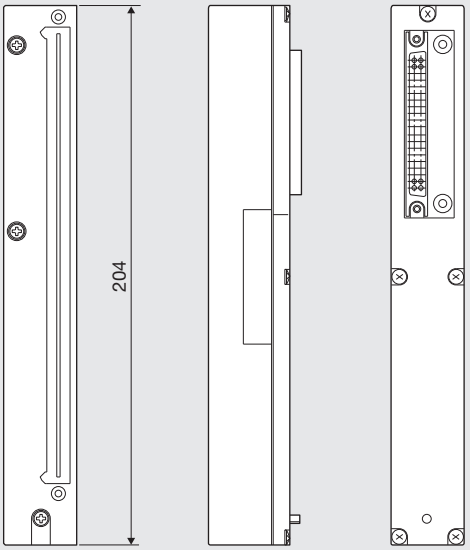

Mounting bracket

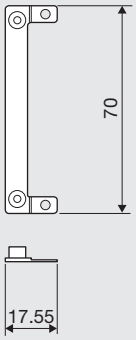

Weight: 105g

Model names:

ERNT-AQTX81
ERNT-AQTY81

Conversion Adapter

Unit: mm

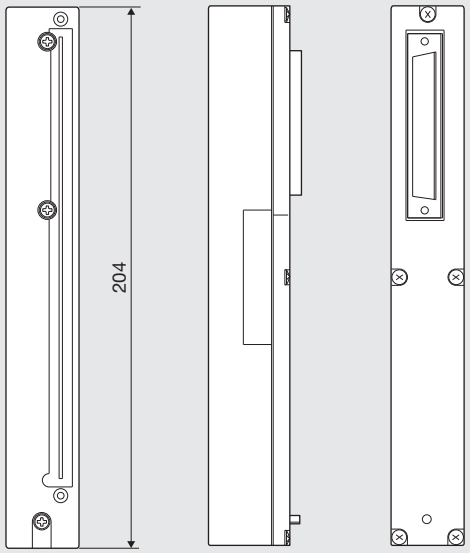

Weight: 110g

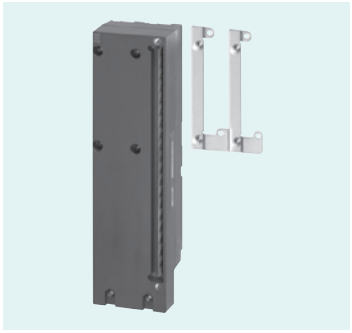

Model names:

ERNT-AQTX11
ERNT-AQTY10A
ERNT-AQTY13
ERNT-AQTY51
ERNT-AQT616AD

Unit: mm

Conversion Adapter

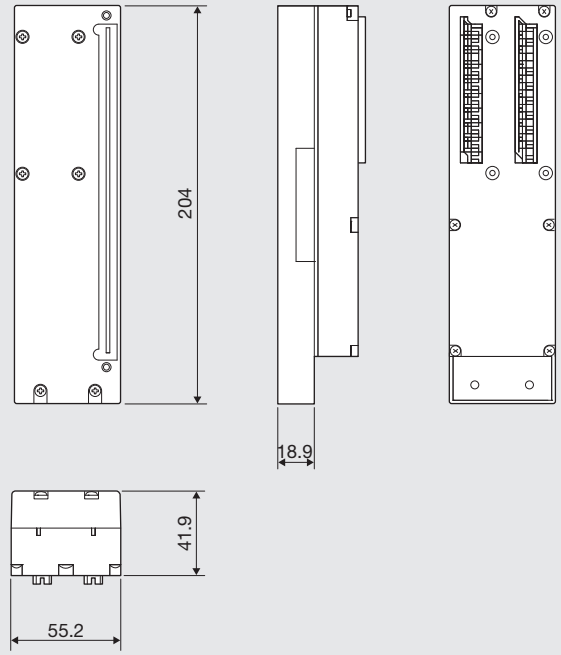

Mounting bracket

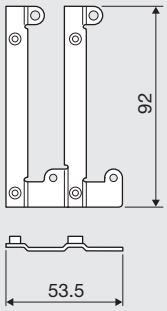

Weight: 250g

Model names:

ERNT-AQTY23
ERNT-AQT68AD-GH
ERNT-AQT616DA

Unit: mm

Conversion Adapter

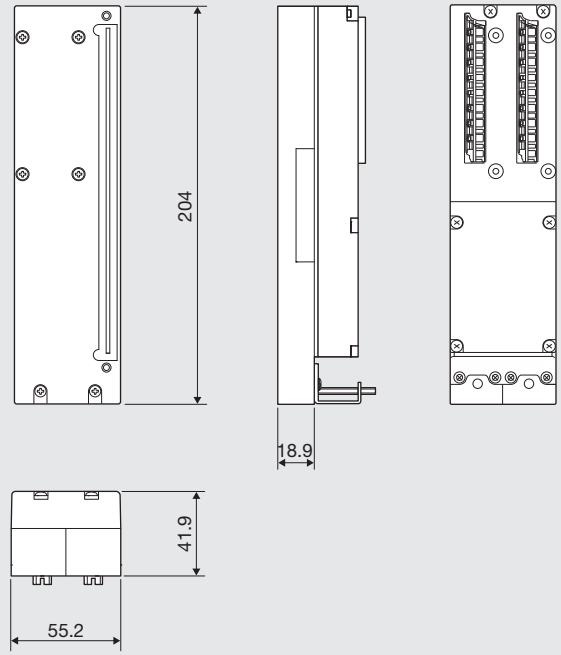

Mounting bracket

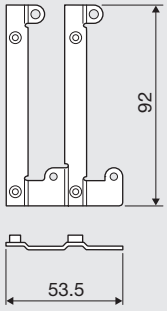

Weight: 280g

Base Adapter

Model names:

ERNT-AQB38
ERNT-AQB68
ERNT-AQB58
ERNT-AQB35
ERNT-AQB65
ERNT-AQB55
ERNT-AQB32
ERNT-AQB62
ERNT-AQB52

Unit: mm

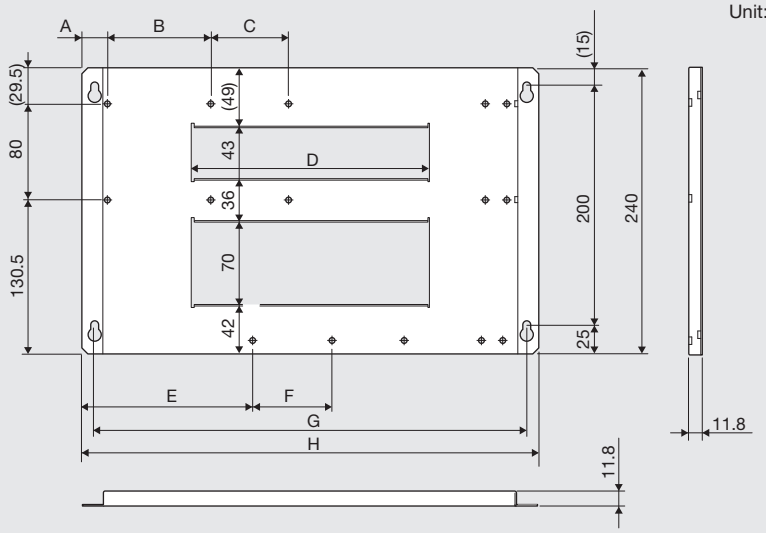

Model	A	B	C	D	E	F	G	H	Weight (g)
ERNT-AQB38	34.5	77.8	-	401	129.3	77.8	460	480	970
ERNT-AQB68	24.5	81.2	-	401	111.9	81.2	446	466	930
ERNT-AQB58	50.7	-	-	296	138.1	-	391	411	870
ERNT-AQB35	47.7	65.3	-	296	142.5	65.3	362	382	795
ERNT-AQB65	23.1	67.3	55.6	197	110.5	67.3	332	352	790
ERNT-AQB55	35.4	55.6	-	197	122.8	-	277	297	655
ERNT-AQB32	51.7	-	-	-	146.5	-	227	247	675
ERNT-AQB62	46.2	-	-	-	133.6	-	218	238	650
ERNT-AQB52	74.6	-	-	-	78.6	-	163	183	505

Conversion Adapter Support Flange

Model names:

ERNT-AQF12
ERNT-AQF8
ERNT-AQF5
ERNT-AQF3

Unit: mm

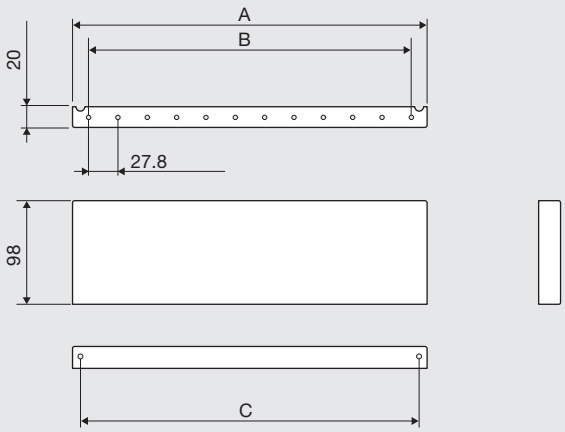

Model	A	B	C	Weight (g)
ERNT-AQF12	335.8	305.8	321.2	590
ERNT-AQF8	224.6	194.6	210	410
ERNT-AQF5	141.2	111.2	126.6	275
ERNT-AQF3	85.6	55.6	71	185

Memo

AnS L series MELSEC-AnS Series ⇨ MELSEC-L Series Upgrade Tool

Upgrading from the MELSEC-AnS Series to the MELSEC-L Series

Simplifies replacement with the MELSEC-L series
The upgrade tool makes it easy to replace the Mitsubishi Electric programmable controller MELSEC-AnS series with the MELSEC-L series.

Significantly shortens the time required for input, output, analog and high-speed counter module wiring, and significantly reduces wiring errors
- The upgrade tool allows you to connect the wiring connected to the MELSEC-AnS series input, output, analog and high-speed counter modules as is to the MELSEC-L series using a conversion adapter. (Partial changes to power supply and common terminal connections required.)
- By using a base adapter, the MELSEC-L series can be installed using the MELSEC-AnS series mounting holes. (Additional drilling of holes is not required.) Compatible with DIN rail installation as well.

Permits reuse of sequence programs
The upgrade tool allows you to change from the MELSEC-AnS series to the MELSEC-L series and reuse programs by changing the PLC type in the Mitsubishi Electric programming software GX Developer (GX Works2 required for certain CPU types).

Product Overview

The MELSEC-AnS series / MELSEC-L series upgrade tool comprises a “conversion adapter” that changes the existing wiring connected to the Mitsubishi Electric programmable controller MELSEC-AnS series modules to wiring applicable to themodules of the MELSEC-L series, and a “base adapter” that makes it possible to install the MELSEC-L series using themounting holes of the MELSEC-AnS series base unit.

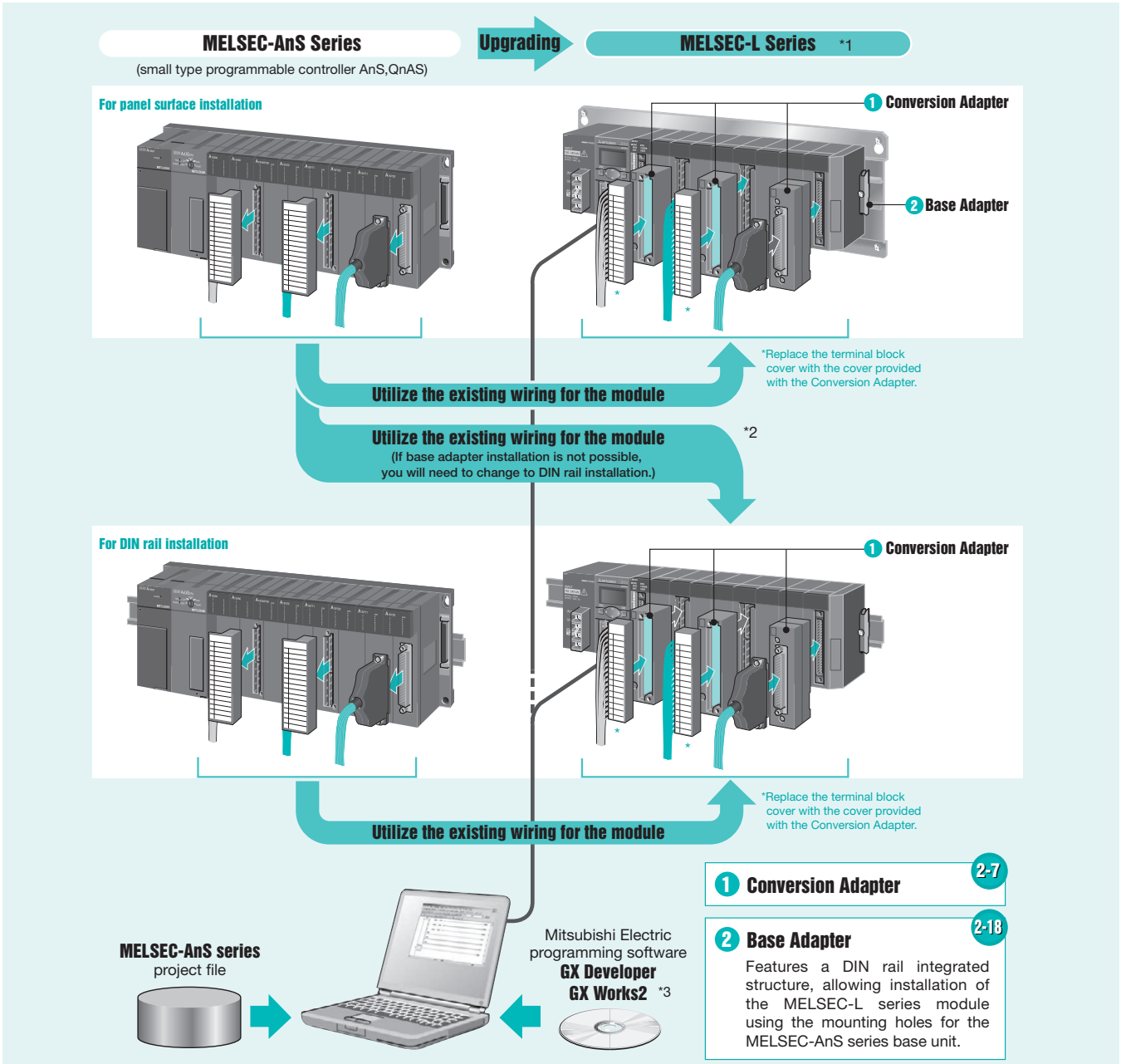

*1: When replacing the MELSEC-AnS series with the MELSEC-L series, verification of the mounting is required due to the change in module width and depth dimensions. For details, refer to the “Usage Precautions” (page 2-19) in this catalog.
*2: If the MELSEC-L series system does not fit in the base adapter horizontal width dimension after replacement. Verify the installation method following "Selecting the installation method during replacement" (page 2-3).
*3: Programs can be reused when changing from the MELSEC-AnS series (existing program) to the MELSEC-L series by changing the PLC type in the Mitsubishi Electric programming software GX Developer. Note that changing to a type other than L02CPU (-P) and L26CPU (-P) BT requires changing the PLC type in GX Works2 after changing the PLC type in GX Developer. For details, refer to the GX Developer and GX Works2 Operating Manuals. Tools that support program replacement with the L series are also provided by Mitsubishi Electric.

If you replace a terminal block type module, the wiring may interfere with an adjacent module. Use of the Mitsubishi Electric LG69 space module is recommended.

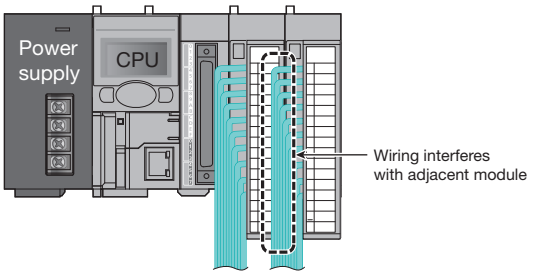

MITSUBISHI ELECTRIC CORPORATION

LG69 space module

Ensures wiring space, making it possible to alleviate wiring interface with adjacent modules.

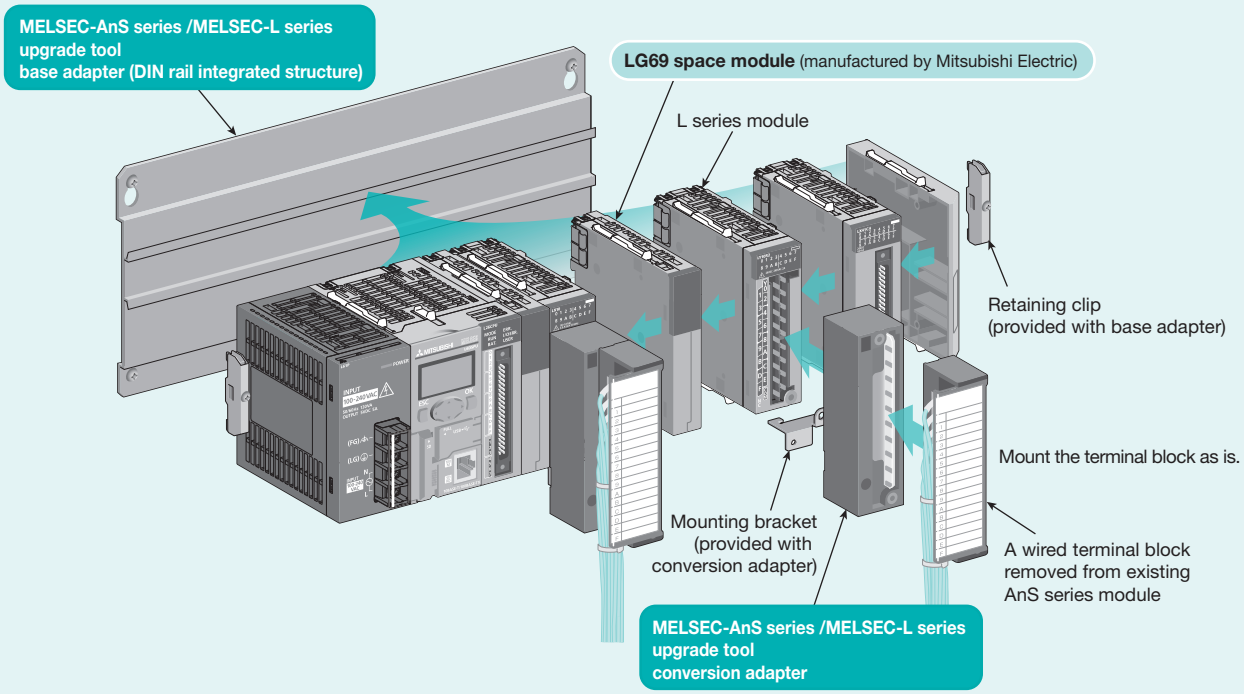

Note

- If you use the LG69 space module, the number of modules mounted is restricted. For details, see the "MELSEC-L CPU Module User's Manual (Hardware Design & Maintenance Inspection)" published by Mitsubishi Electric.
- Depending on the system configuration, the width dimension may increase, making it no longer possible to use the base adapter. Verify the installation method by following "Selecting the Installation Method During Replacement" on the following page.

Selecting the Installation Method During Replacement

The MELSEC-L series features a structure that connects the modules together without a base. As a result, you need to calculate the width dimension of the system after replacement, taking into consideration the width dimension tolerance of each module. The installation method (base adapter or DIN rail) is then determined by the calculation result of the width dimension.

◎Calculating the width dimension of the system after replacement

Calculate the width dimension of the system using the following formula.

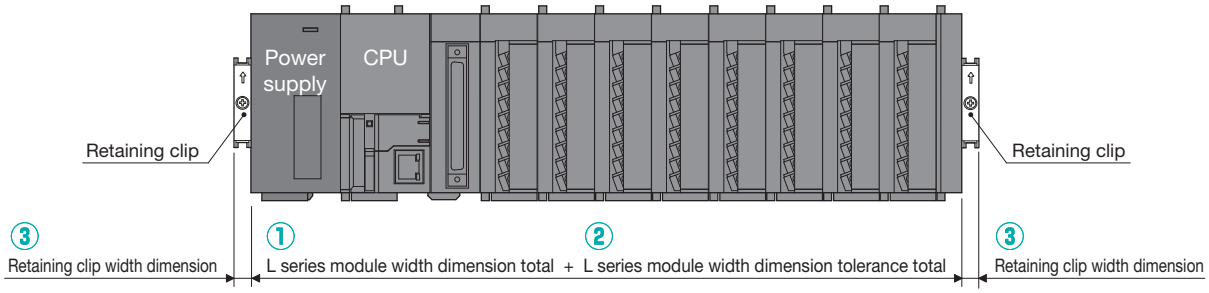

① (*1) L series module width dimension total + ② (*2) L series module width dimension tolerance total + ③ (*3) Retaining clip width dimension

Automatic calculation of width dimension

The "Upgrade Device Selection Tool" provided by the Web information service MEEFAN automatically calculates the width dimension when you simply select the model.

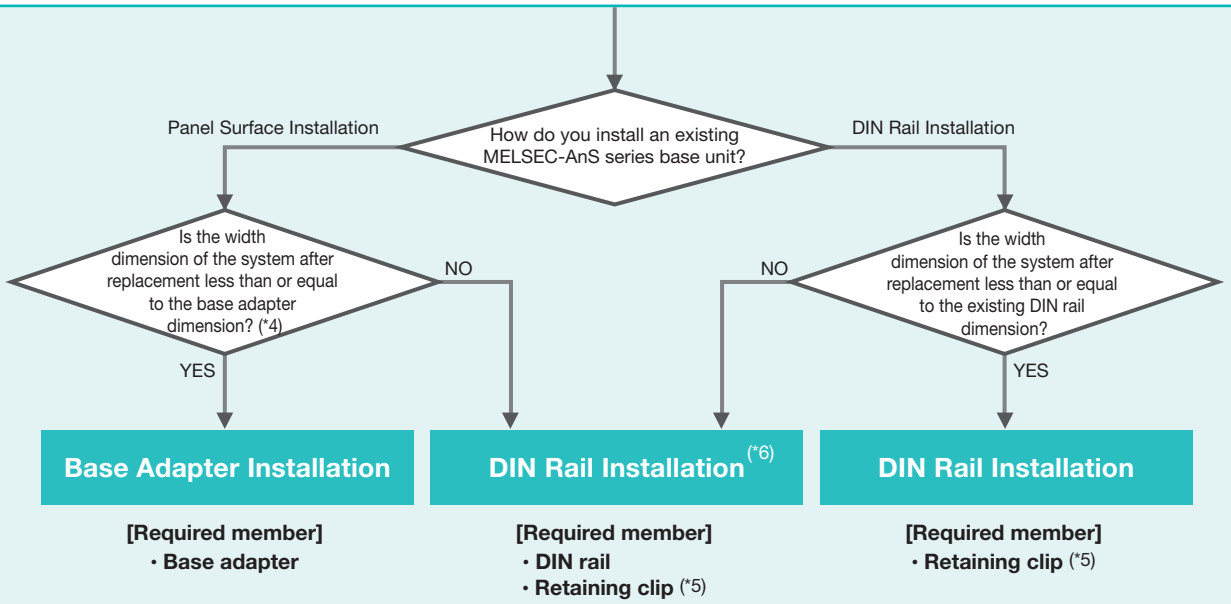

*1: Dimension stated in the L series module manual

*2: Dimension tolerance (value per module) for L series module width dimension

L series module width dimension	Dimension tolerance
28.5 mm or less	+0.5 mm (per module)
Greater than 28.5 mm	+1.0 mm (per module)

*3: Width dimension of the retaining clip used (9mm per clip and 18 mm per two clips if using the retaining clip that comes with the base adapter)

*4: For the width dimension of each base adapter, see dimension A of the External Drawing (page 2-24).
Example) 430 mm for **ERNT-ASLB38**.

*5: Use a retaining clip (user provided clip) that can be mounted to the DIN rail.

*6: If the system after replacement does not fit in the installation space (width), consider the way of connection to divide some parts of the system into extension blocks.

Example) If replacing A1S38B comprising eight mounted input/output modules

◎If executing replacement without using a space module

a) Base adapter **ERNT-ASLB38** width dimension: 430 mm

b) Width dimension after replacement

①Power supply module : 45 mm (dimension tolerance + 1.0 mm)

②CPU module : 70 mm (dimension tolerance + 1.0 mm)

③Input/Output module : 28.5 mm (dimension tolerance + 0.5 mm) ×8 modules

④End cover : 13 mm (dimension tolerance + 0.5 mm)

⑤Retaining clip : 9 mm ×2 clips

(45 + 70 + 28.5 × 8 + 13) + (1.0 + 1.0 + 0.5 × 8 + 0.5) + (9 × 2)

L series module width dimension total / L series module width dimension tolerance total / Retaining clip width dimension

= 356 + 6.5 + 18

= 380.5 mm ≈ Max. 381 mm

◎If executing replacement using a space module

a) Base adapter **ERNT-ASLB38** width dimension: 430 mm

b) Width dimension after replacement

①Power supply module : 45 mm (dimension tolerance + 1.0 mm)

②CPU module : 70 mm (dimension tolerance + 1.0 mm)

③Space module : 16.5 mm (dimension tolerance + 0.5 mm) ×8 modules

④Input/Output module : 28.5 mm (dimension tolerance + 0.5 mm) ×8 modules

⑤End cover : 13 mm (dimension tolerance + 0.5 mm)

⑥Retaining clip : 9 mm ×2 clips

(45 + 70 + 16.5 × 8 + 28.5 × 8 + 13) + (1.0 + 1.0 + 0.5 × 8 + 0.5 × 8 + 0.5) + (9 × 2)

L series module width dimension total / L series module width dimension tolerance total / Retaining clip width dimension

= 488 + 10.5 + 18

= 516.5 mm ≈ Max. 517 mm

a) 430 mm ≥ b) 381 mm

The total width does not exceed the base adapter **ERNT-ASLB38** dimension (430 mm). Base adapter installation is available.

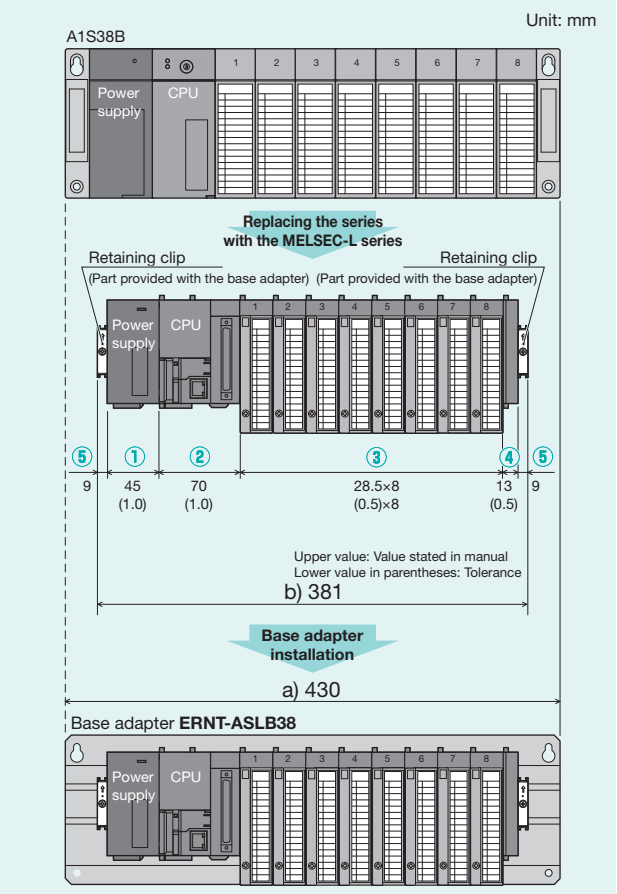

a) 430 mm < b) 517 mm

The total width exceeds the base adapter **ERNT-ASLB38** dimension (430 mm). DIN rail installation is required.

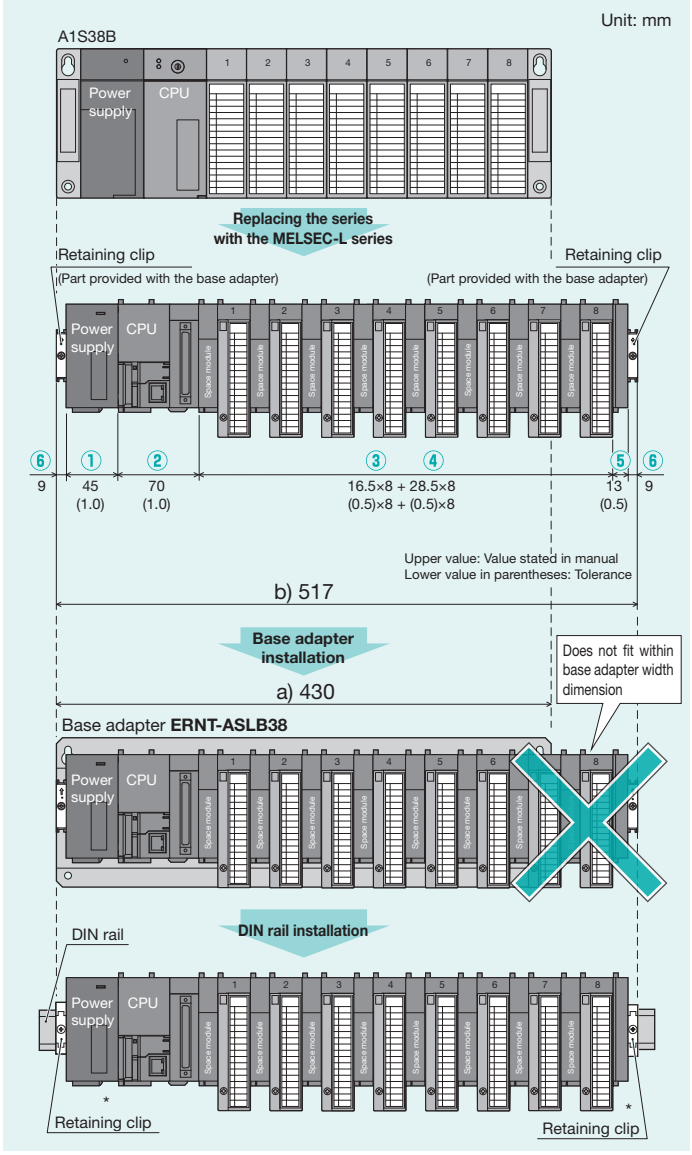

*: Use a retaining clip (user provided clip) that can be mounted on the DIN rail.

Model List

1 Conversion Adapter

When selecting a conversion adapter, be sure to refer to the module specification comparison charts and notes on pages 2-7 to 2-13. These pages indicate precautions such as differences in the number of points per common. For detailed specifications and general specifications not stated in the module specification comparison charts, refer to the user's manual of the corresponding module. Note that the areas where the specifications differ between the MELSEC-AnS series and the MELSEC-L series are restricted in terms of specifications during replacement. Verify the specifications of the connected devices.

For Input/Output Modules [1-module type]

Input / Output	MELSEC-AnS series module model before replacement	MELSEC-L series module model after replacement	Conversion adapter				Page
			Model	Shape		No. of input/output points	
				MELSEC-AnS series	MELSEC-L series		
Input	A1SX10	LX10	**ERNT-ASLTXY10**	Terminal block (20 points)	Terminal block (18 points)	16 points	**2-7**
	A1SX10EU						
Output	A1SY10	LY10R2					
	A1SY10EU						
Input	A1SX40	LX40C6	**ERNT-ASLTX40**				**2-8**
	A1SX40-S1						
	A1SX40-S2						
	A1SX80	LX40C6	**ERNT-ASLTX80**				**2-8**
	A1SX80-S1						
	A1SX80-S2						
Output	A1SY22	LY20S6	**ERNT-ASLTY22**				**2-9**
	A1SY40	LY40NT5P	**ERNT-ASLTY40**				**2-9**
	A1SY40P						
	A1SY50	LY40NT5P	**ERNT-ASLTY50**				**2-10**
	A1SY80	LY40PT5P	**ERNT-ASLTY80**				**2-10**
Input	A1SX81	LX41C4	**ERNT-ASLCXY81**	D-sub connector (37P)	Connector (40P)	32 points	**2-11**
	A1SX81-S2						
Output	A1SY81	LY41PT1P					
	A1SY81EP						

Note 1. The input/output in the table below are not conversion adapter compatible and therefore require rewiring. Be sure to verify that the MELSEC-L series module specifications satisfy the specifications of connected devices and equipment.

Input/Output	MELSEC-AnS series module model before replacement		MELSEC-L series module model after replacement		
	Model	No. of points	Model	No. of points	No. of required modules
Input	A1SX20	16 points	LX28	8points	2 modules
	A1SX20EU				
	A1SX30	16 points	LX40C6 (24VDC)	16 points	1 module
Output	A1SY14EU	12 points	LY10R2	16 points	1 module
Combined input/output	A1SX48Y18	Input 8 points + Output 8 points	LX40C6 + LY10R2	16 points + 16 points	1 module + 1 module
	A1SX48Y58	Input 8 points + Output 8 points	LX40C6 + LY40NT5P	16 points + 16 points	1 module + 1 module
Output	A1SY18A	8 points	LY18R2A	8points	1 module
	A1SY18AEU				
	A1SY28A	8 points	LY28S1A	8points	1 module
	A1SY28EU				
	A1SY60	16 points	There is no applicable MELSEC-L series module.		
	A1SY60E				
	A1SY68A	8 points			
	A1SY71	32 points			
Dynamic input	A1S42X	16/32/48/64 points			
Dynamic output	A1S42Y	16/32/48/64 points			

Note 2. The input/output modules in the table below can use the existing wiring as is. Be sure to verify that the MELSEC-L series module specifications satisfy the specifications of connected devices and equipment.

Input/Output	MELSEC-AnS series module model before replacement	MELSEC-L series module model after replacement
Input	A1SX41	LX41C4 (24VDC)
	A1SX41-S1	LX41C4
	A1SX41-S2	
	A1SX42	LX42C4 (24VDC)
	A1SX42-S1	LX42C4
	A1SX42-S2	
	A1SX71	LX41C4 (24VDC)
	A1SX82-S1	LX42C4
Output	A1SY41	LY41NT1P
	A1SY41P	
	A1SY42	LY42NT1P
	A1SY42P	
	A1SY82	LY42PT1P

Input/Output	MELSEC-AnS series module model before replacement	MELSEC-L series module model after replacement
Combined input/output	A1SH42	LH42C4NT1P (24VDC)
	A1SH42P	
	A1SH42-S1	LH42C4NT1P
	A1SH42P-S1	

For Analog Modules
[1-module type]

Input/ Output	MELSEC-AnS series module model before replacement	MELSEC-L series module model after replacement	Conversion adapter				Page
			Model	Shape		No. of channels	
				MELSEC-AnS series	MELSEC-L series		
Input	A1S64AD	L60AD4	**ERNT-ASLT64AD**	Terminal block (20 points)	Terminal block (18 points)	4 channels	**2-12**
Output	A1S62DA	L60DA4	**ERNT-ASLT62DA**			2 channels	**2-13**

Note 3. Modules other than the intelligent function modules above are not compatible with the conversion adapter. Rewiring is required.

For High-Speed Counter Modules
[1-module type]

MELSEC-AnS series module model before replacement	MELSEC-L series module model after replacement	Conversion adapter				Page
		Model	Shape		No. of channels	
			MELSEC-AnS series	MELSEC-L series		
A1SD61	LD62	**ERNT-ASLTD61**	Terminal block (20 points)	Connector (40P)	1 channel	**2-14**
A1SD62	LD62	**ERNT-ASLTD62**			2 channels	**2-16**

2 Base Adapter

With the base adapter, the MELSEC-Q series base unit can be installed using the mounting holes of the MELSEC-L series base unit.
The base adapter width dimension is the same as that of the MELSEC-AnS series base unit prior to replacement. As a result, the following precautions apply even if you do not use a space module (LG69).

Main/ Extension	MELSEC-AnS series module model before replacement	Base adapter model	Replacement precautions	Page
Main	A1S38B	**ERNT-ASLB38**	–	**2-18**
	A1S38HB			
	A1S35B	**ERNT-ASLB35**	–	
	A1S33B	**ERNT-ASLB33**	If extension blocks are connected, the number of modules that can be mounted is two (*1).	
	A1S32B	**ERNT-ASLB32**	If extension blocks are connected, the number of modules that can be mounted is one (*1).	
	A1SJCPU	**ERNT-ASLBJ**	–	
	A1SJCPU-S3			
	A1SJHCPU			
Extension	A1S68B	**ERNT-ASLB68**	–	
	A1S65B	**ERNT-ASLB65**	–	
	A1S58B	**ERNT-ASLB58**	–	
	A1S55B	**ERNT-ASLB55**	–	
	A1S52B	**ERNT-ASLB52**	The number of modules that can be mounted is one (*1).	

*1: Module with a width dimension of 28.5mm.

Conversion Adapter

Specifications

For Input/Output Modules

1-module type

1) ERNT-ASLTXY10 Terminal block (20P)→Terminal block (18P)

Conversion adapter model	MELSEC-AnS series module model	No. of input/ output points	MELSEC-L series module model
ERNT-ASLTXY10	A1SX10	16 points	LX10
	A1SX10EU		
	A1SY10	16 points	LY10R2
	A1SY10EU		

With A1SX10/A1SX10EU→LX10

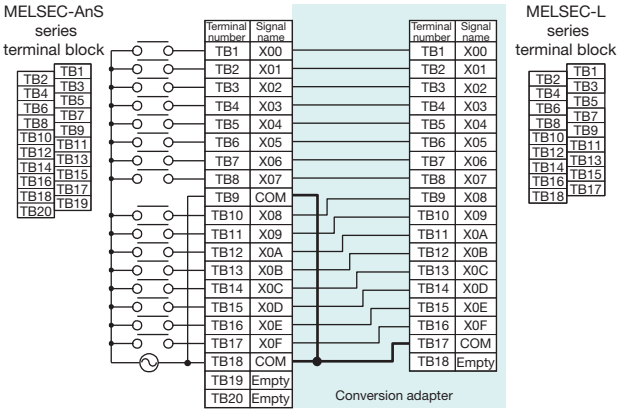

[Specification comparison chart]

Specification \ Model	MELSEC-AnS series A1SX10	MELSEC-AnS series A1SX10EU	MELSEC-L series LX10
No. of input points	16 points	16 points	16 points
Isolation method	Photocoupler isolation	Photocoupler isolation	Photocoupler isolation
Rated input voltage	100 to 120VAC, 50/60Hz	100 to 120VAC, 50/60Hz	100 to 120VAC (+10/-15%) 50/60Hz (±3Hz)
Rated input current	Approx. 6mA (100VAC, 60Hz)	Approx. 7mA (120VAC, 60Hz)	8.2mA (100VAC, 60Hz) 6.8mA (100VAC, 50Hz)
Rush current	200mA, maximum, within 1ms (132VAC)	200mA, maximum, within 1ms (132VAC)	200mA, maximum, within 1ms
ON voltage / ON current	80VAC or more / 5mA or more	80VAC or more / 5mA or more	80VAC or more / 5mA or more (50Hz, 60Hz)
OFF voltage / OFF current	30VAC or less / 1.4mA or less	30VAC or less / 1.4mA or less	30VAC or less / 1.7mA or less (50Hz, 60Hz)
Input impedance	Approx. 18kΩ (60Hz) Approx. 21kΩ (50Hz)	Approx. 18kΩ (60Hz) Approx. 21kΩ (50Hz)	12.2kΩ (60Hz) 14.6kΩ (50Hz)
Response time OFF→ON	20ms or less	20ms or less	15ms or less
Response time ON→OFF	35ms or less	35ms or less	20ms or less
Internal current consumption	50mA (TYP. all points ON)	50mA (TYP. all points ON)	90mA (TYP. all points ON)
Wiring method for common	16 points/common	16 points/common	16 points/common
External interface	20-point terminal block	20-point terminal block	18-point terminal block

Notes
1. For ▭ areas, verify that the MELSEC-L series module specifications satisfy the specifications of the connected device/equipment.
2. For detailed and general specifications not described in the module specification comparison chart, refer to the user's manual of the module used. Note that the areas where the specifications differ between the MELSEC-AnS series and the MELSEC-L series are restricted in terms of specifications during replacement. Verify the specifications of the connected devices.

With A1SY10/A1SY10EU→LY10R2

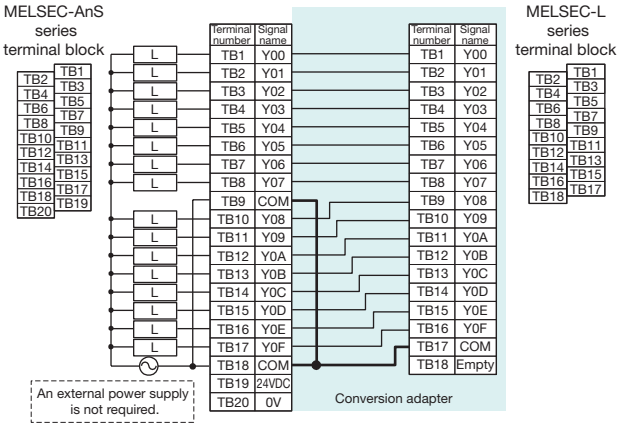

[Specification comparison chart]

Specification \ Model	MELSEC-AnS series A1SY10	MELSEC-AnS series A1SY10EU	MELSEC-L series LY10R2
No. of output points	16 points	16 points	16 points
Isolation method	Photocoupler isolation	Photocoupler isolation	Relay isolation
Rated switching voltage/current	240VAC/2A (cosΦ=1) 24VDC/2A (Resistance load) 8A/common	120VAC/2A (cosΦ=1) 24VDC/2A (Resistance load) 8A/common	240VAC/2A (cosΦ=1) 24VDC/2A (Resistance load) 8A/common
Minimum switching load	5VDC, 1mA	5VDC, 1mA	5VDC, 1mA
Maximum switching voltage	264VAC, 125VDC	132VAC, 125VDC	264VAC, 125VDC
Response time OFF→ON	10ms or less	10ms or less	10ms or less
Response time ON→OFF	12ms or less	12ms or less	12ms or less
Surge suppressor	No	No	No
Fuse	No	No	No
Internal current consumption	120mA (TYP. all points ON)	120mA (TYP. all points ON)	460mA (TYP. all points ON)
Wiring method for common	8 points/common	8 points/common	16 points/common
External interface	20-point terminal block	20-point terminal block	18-point terminal block

Notes
1. When the number of points per common changes from eight (two circuits) to 16 and the terminal numbers TB9 and TB18 on the MELSEC-AnS series side are used separately, a wiring change is required.
2. An external power supply connected to terminal numbers TB19 and TB20 on the MELSEC-AnS series side is not required.
3. For ▭ areas, verify that the MELSEC-L series module specifications satisfy the specifications of the connected device/equipment.
4. For detailed and general specifications not described in the specification comparison chart, refer to the user's manual of the module used. Note that the areas where the specifications differ between the MELSEC-AnS series and the MELSEC-L series are restricted in terms of specifications during replacement. Verify the specifications of the connected devices.

2) ERNT-ASLTX40 Terminal block (20P)→Terminal block (18P)

Conversion adapter model	MELSEC-AnS series module model	No. of input points	MELSEC-L series module mode
ERNT-ASLTX40	A1SX40	16 points	LX40C6
	A1SX40-S1		
	A1SX40-S2		

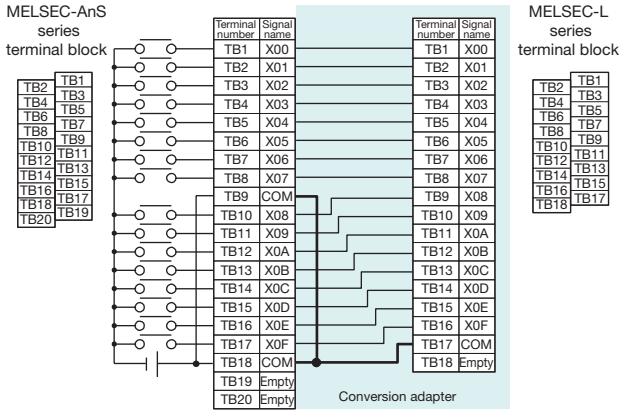

[Specification comparison chart]

Specification \ Model	MELSEC-AnS series A1SX40 (Sink type)	A1SX40-S1 (Sink type)	A1SX40-S2 (Sink type)	MELSEC-L series LX40C6 (Positive/Negative common shared type)
No. of input points	16 points	16 points	16 points	16 points
Isolation method	Photocoupler isolation	Photocoupler isolation	Photocoupler isolation	Photocoupler isolation
Rated input voltage	12/24VDC	24VDC	24VDC	24VDC
Rated input current	Approx. 3mA / Approx. 7mA	Approx. 7mA	Approx. 7mA	6mA TYP.
ON voltage / ON current	8VDC or more / 2mA or more	14VDC or more / 4mA or more	14VDC or more / 3.5mA or more	15VDC or more / 4mA or more
OFF voltage / OFF current	4VDC or less / 1mA or less	6.5VDC or less / 1.7mA or less	6.5VDC or less / 1.7mA or less	8VDC or less / 2mA or less
Input impedance	Approx. 3.3kΩ	Approx. 3.3kΩ	Approx. 3.3kΩ	3.8kΩ
Response time OFF→ON	10ms or less	0.1ms or less	10ms or less	1/5/10/20/70ms or less
Response time ON→OFF	10ms or less	0.2ms or less	10ms or less	1/5/10/20/70ms or less
Internal current consumption	50mA (TYP. all points ON)	50mA (TYP. all points ON)	50mA (TYP. all points ON)	90mA (TYP. all points ON)
Wiring method for common	16 points/common	16 points/common	16 points/common	16 points/common
External interface	20-point terminal block	20-point terminal block	20-point terminal block	18-point terminal block

Notes
1. When replacing A1SX40 and using a rated input voltage of 12VDC, the voltage needs to be changed to 24VDC.
2. For ▭ areas, verify that the MELSEC-L series module specifications satisfy the specifications of the connected device/equipment.
3. For detailed and general specifications not described in the specification comparison chart, refer to the user's manual of the module used. Note that the areas where the specifications differ between the MELSEC-AnS series and the MELSEC-L series are restricted in terms of specifications during replacement. Verify the specifications of the connected devices.

3) ERNT-ASLTX80 Terminal block (20P)→Terminal block (18P)

Conversion adapter model	MELSEC-AnS series module model	No. of input points	MELSEC-L series module model
ERNT-ASLTX80	A1SX80	16 points	LX40C6
	A1SX80-S1		
	A1SX80-S2		

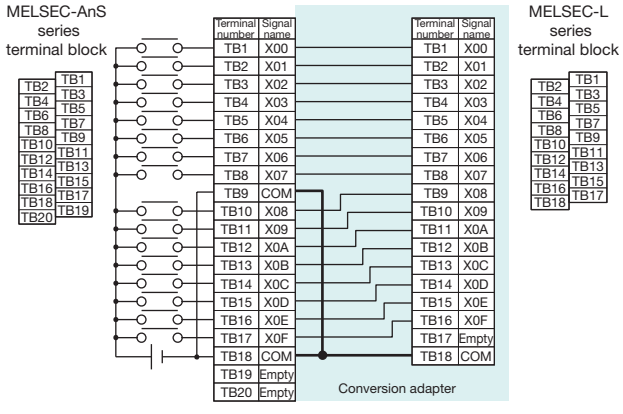

[Specification comparison chart]

Specification \ Model	MELSEC-AnS series A1SX80 (Sink/Source type)	A1SX80-S1 (Sink/Source type)	A1SX80-S2 (Sink/Source type)	MELSEC-L series LX40C6 (Positive/Negative common shared type)
No. of input points	16 points	16 points	16 points	16 points
Isolation method	Photocoupler isolation	Photocoupler isolation	Photocoupler isolation	Photocoupler isolation
Rated input voltage	12/24VDC	24VDC	24VDC	24VDC
Rated input current	Approx. 3mA / Approx. 7mA	Approx. 7mA	Approx. 7mA	6mA TYP.
ON voltage / ON current	8VDC or more / 2mA or more	17VDC or more / 5mA or more	13VDC or more / 3.5mA or more	15VDC or more / 4mA or more
OFF voltage / OFF current	4VDC or less / 1mA or less	5VDC or less / 1.7mA or less	6VDC or less / 1.7mA or less	8VDC or less / 2mA or less
Input impedance	Approx. 3.3kΩ	Approx. 3.3kΩ	Approx. 3.3kΩ	3.8kΩ
Response time OFF→ON	10ms or less	0.4ms or less	10ms or less	1/5/10/20/70ms or less
Response time ON→OFF	10ms or less	0.5ms or less	10ms or less	1/5/10/20/70ms or less
Internal current consumption	50mA (TYP. all points ON)	50mA (TYP. all points ON)	50mA (TYP. all points ON)	90mA (TYP. all points ON)
Wiring method for common	16 points/common	16 points/common	16 points/common	16 points/common
External interface	20-point terminal block	20-point terminal block	20-point terminal block	18-point terminal block

Notes
1. When replacing A1SX80 and using a rated input voltage of 12VDC, the voltage needs to be changed to 24VDC.
2. For ▭ areas, verify that the MELSEC-L series module specifications satisfy the specifications of the connected device/equipment.
3. For detailed and general specifications not described in the specification comparison chart, refer to the user's manual of the module used. Note that the areas where the specifications differ between the MELSEC-AnS series and the MELSEC-L series are restricted in terms of specifications during replacement. Verify the specifications of the connected devices.

4) ERNT-ASLTY22 Terminal block (20P)→Terminal block (18P)

Conversion adapter model	MELSEC-AnS series module model	No. of output points	MELSEC-L series module model
ERNT-ASLTY22	A1SY22	16 points	LY20S6

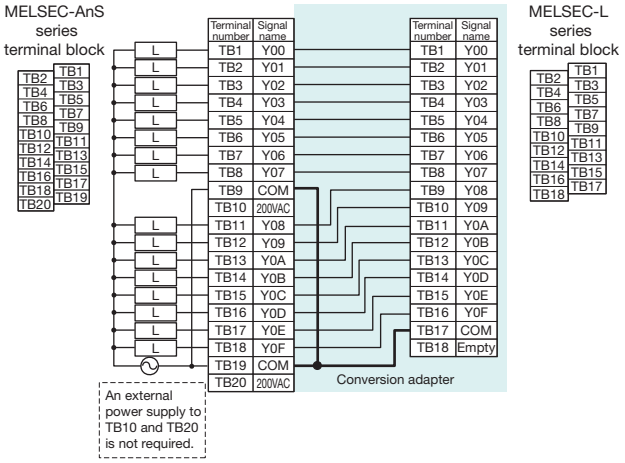

[Specification comparison chart]

Specification \ Model		MELSEC-AnS series	MELSEC-L series
		A1SY22	LY20S6
No. of output points		16 points	16 points
Isolation method		Photocoupler isolation	Photocoupler isolation
Rated load voltage		100 to 240VAC 50/60Hz±3Hz	100 to 240VAC (+10/-15%) 50/60Hz (±3Hz)
Maximum load current		0.6A/point 2.4A/common	0.6A/point 4.8A/common
Minimum load voltage/current		24VAC 100mA 100VAC 10mA 240VAC 20mA	24VAC 100mA 100VAC 25mA 240VAC 25mA
Maximum rush current		20A 10ms or less, 8A 100ms or less	20A, one cycle or less
OFF leakage current		1.5mA (120VAC, 60Hz) 3mA (240VAC, 60Hz)	1.5mA (at 120VAC, 60Hz) 3mA or less (at 240VAC, 60Hz)
ON maximum voltage drop		1.5VAC or less (0.1 to 0.6A) 1.8VAC or less (50 to 100mA) 2VAC or less (10 to 50mA)	1.5V or less (Load current at 0.6A)
Response time	OFF→ON	1ms or less	1ms or less + 0.5 cycles or less
	ON→OFF	1ms + 0.5 cycles or less	1ms + 0.5 cycles or less (Rated load, resistance load)
Surge suppressor		CR absorber	CR absorber
Fuse		5A (1 common/fuse) not replaceable	No (Fuse installation is recommended for each external wiring point.)
Internal current consumption		270mA (TYP. all points ON)	300mA (TYP. all points ON)
Wiring method for common		8 points/common	16 points/common
External interface		20-point terminal block	18-point terminal block

Notes
1. When the number of points per common changes from eight (two circuits) to 16 and the terminal numbers TB9 and TB19 on the MELSEC-AnS series side are used separately, a wiring change is required.
2. An external power supply connected to terminal numbers TB10 and TB20 on the MELSEC-AnS series side is not required.
3. For ▭ areas, verify that the MELSEC-L series module specifications satisfy the specifications of the connected device/equipment.
4. For detailed and general specifications not described in the specification comparison chart, refer to the user's manual of the module used. Note that the areas where the specifications differ between the MELSEC-AnS series and the MELSEC-L series are restricted in terms of specifications during replacement. Verify the specifications of the connected devices.

5) ERNT-ASLTY40 Terminal block (20P)→Terminal block (18P)

Conversion adapter model	MELSEC-AnS series module model	No. of output points	MELSEC-L series module model
ERNT-ASLTY40	A1SY40 A1SY40P	16 points	LY40NT5P

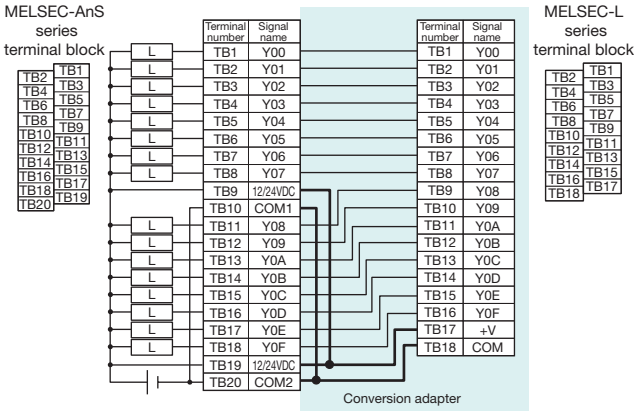

[Specification comparison chart]

Specification \ Model		MELSEC-AnS series		MELSEC-L series
		A1SY40 (Sink type)	A1SY40P (Sink type)	LY40NT5P (Sink type)
No. of output points		16 points	16 points	16 points
Isolation method		Photocoupler isolation	Photocoupler isolation	Photocoupler isolation
Rated load voltage		12/24VDC	12/24VDC	12/24VDC
Maximum load current		0.1A/point 0.8A/common	0.1A/point 0.8A/common	0.5A/point 5A/common
Maximum rush current		0.4A, 10ms or less	0.7A, 10ms or less	Current restrictions exist due to the overload protection function
OFF leakage current		0.1mA or less	0.1mA or less	0.1mA or less
ON maximum voltage drop		1.0VDC (TYP) 0.1A 2.5VDC (MAX) 0.1A	0.1VDC (TYP) 0.1A 0.2VDC (MAX) 0.1A	0.2VDC (TYP) 0.5A 0.3VDC (MAX) 0.5A
Response time	OFF→ON	2ms or less	1ms or less	0.5ms or less
	ON→OFF	2ms or less (Resistance load)	1ms or less (Rated load, resistance load)	1ms or less (Rated load, resistance load)
Surge suppressor		Zener diode	Zener diode	Zener diode
Fuse		1.6 A (1 common/fuse) not replaceable	No	No
Internal current consumption		270mA (TYP. all points ON)	79mA (TYP. all points ON)	100mA (TYP. all points ON)
Protection function		No	Yes (Overheat protection and overload protection)	Yes (Overheat protection and overload protection)
Wiring method for common		8 points/common	8 points/common	16 points/common
External interface		20-point terminal block	20-point terminal block	18-point terminal block

Notes
1. When the number of points per common changes from eight (two circuits) to 16 and the terminal numbers TB9 and TB19 as well as TB10 and TB20 on the MELSEC-AnS series side are used separately, a wiring change is required.
2. For ▭ areas, verify that the MELSEC-L series module specifications satisfy the specifications of the connected device/equipment.
3. For detailed and general specifications not described in the specification comparison chart, refer to the user's manual of the module used. Note that the areas where the specifications differ between the MELSEC-AnS series and the MELSEC-L series are restricted in terms of specifications during replacement. Verify the specifications of the connected devices.

6) ERNT-ASLTY50 Terminal block (20P)→Terminal block (18P)

Conversion adapter model	MELSEC-AnS series module model	No. of output points	MELSEC-L series module model
ERNT-ASLTY50	A1SY50	16 points	LY40NT5P

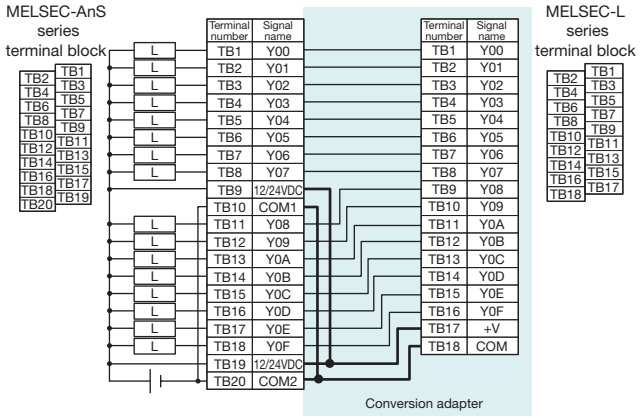

[Specification comparison chart]

Specification \ Model	MELSEC-AnS series A1SY50 (Sink type)	MELSEC-L series LY40NT5P (Sink type)
No. of output points	16 points	16 points
Isolation method	Photocoupler isolation	Photocoupler isolation
Rated load voltage	12/24VDC	12/24VDC
Maximum load current	0.5A/point 2A/common	0.5A/point 5A/common
Maximum rush current	4A, 10ms or less	Current restrictions exist due to the overload protection function
OFF leakage current	0.1mA or less	0.1mA or less
ON maximum voltage drop	0.9VDC (TYP) 0.5A 1.5VDC (MAX) 0.5A	0.2VDC (TYP) 0.5A 0.3VDC (MAX) 0.5A
Response time OFF→ON	2ms or less	0.5ms or less
Response time ON→OFF	2ms or less (Resistance load)	1ms or less (Rated load, resistance load)
Surge suppressor	Zener diode	Zener diode
Fuse	3.2A (1 common/fuse) not replaceable	No
Protection function	No	Yes (Overheat protection and overload protection)
Internal current consumption	120mA (TYP. all points ON)	100mA (TYP. all points ON)
Wiring method for common	8 points/common	16 points/common
External interface	20-point terminal block	18-point terminal block

Notes
1. When the number of points per common changes from eight (two circuits) to 16 and the terminal numbers TB9 and TB19 as well as TB10 and TB20 on the MELSEC-AnS series side are used separately, a wiring change is required.
2. For ▭ areas, verify that the MELSEC-L series module specifications satisfy the specifications of the connected device/equipment.
3. For detailed and general specifications not described in the specification comparison chart, refer to the user's manual of the module used. Note that the areas where the specifications differ between the MELSEC-AnS series and the MELSEC-L series are restricted in terms of specifications during replacement. Verify the specifications of the connected devices.

7) ERNT-ASLTY80 Terminal block (20P)→Terminal block (18P)

Conversion adapter model	MELSEC-AnS series module model	No. of output points	MELSEC-L series module model
ERNT-ASLTY80	A1SY80	16 points	LY40PT5P

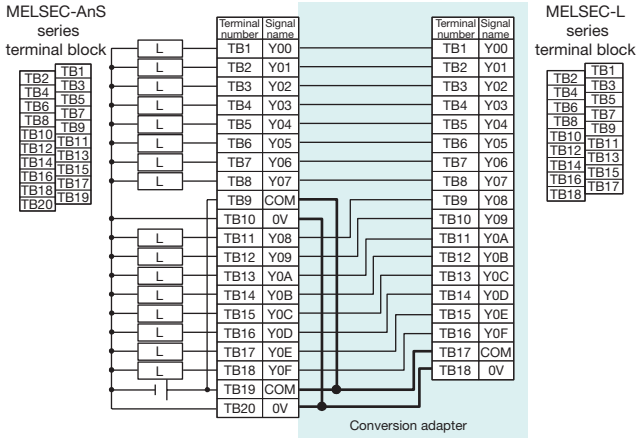

[Specification comparison chart]

Specification \ Model	MELSEC-AnS series A1SY80 (Source type)	MELSEC-L series LY40PT5P (Source type)
No. of output points	16 points	16 points
Isolation method	Photocoupler isolation	Photocoupler isolation
Rated load voltage	12/24VDC	12/24VDC
Maximum load current	0.8A/point 3.2A/common	0.5A/point 5A/common
Maximum rush current	8A, 10ms or less	Current restrictions exist due to the overload protection function
OFF leakage current	0.1mA or less	0.1mA or less
ON maximum voltage drop	1.5VDC (MAX) 0. 8A	0.2VDC (TYP) 0.5A 0.3VDC (MAX) 0.5A
Response time OFF→ON	2ms or less	0.5ms or less
Response time ON→OFF	2ms or less (Resistance load)	1ms or less (Rated load, resistance load)
Surge suppressor	Zener diode	Zener diode
Fuse	5A (1 common/fuse) not replaceable	No
Protection function	No	Yes (Overheat protection and overload protection)
Internal current consumption	120mA (TYP. all points ON)	100mA (TYP. all points ON)
Wiring method for common	8 points/common	16 points/common
External interface	20-point terminal block	18-point terminal block

Notes
1. When the number of points per common changes from eight (two circuits) to 16 and the terminal numbers TB9 and TB19 as well as TB10 and TB20 on the MELSEC-AnS series side are used separately, a wiring change is required.
2. For ▭ areas, verify that the MELSEC-L series module specifications satisfy the specifications of the connected device/equipment.
3. For detailed and general specifications not described in the specification comparison chart, refer to the user's manual of the module used. Note that the areas where the specifications differ between the MELSEC-AnS series and the MELSEC-L series are restricted in terms of specifications during replacement. Verify the specifications of the connected devices.

8) ERNT-ASLCXY81 D-Sub connector (37P)→Connector (40p)

Conversion adapter model	MELSEC-AnS series module model	No. of input/ output points	MELSEC-L series module model
ERNT-ASLCXY81	A1SX81	32 points	LX41C4
	A1SX81-S2		
	A1SY81	32 points	LY41PT1P
	A1SY81EP		

With A1SX81/A1SX81-S2→LX41C4

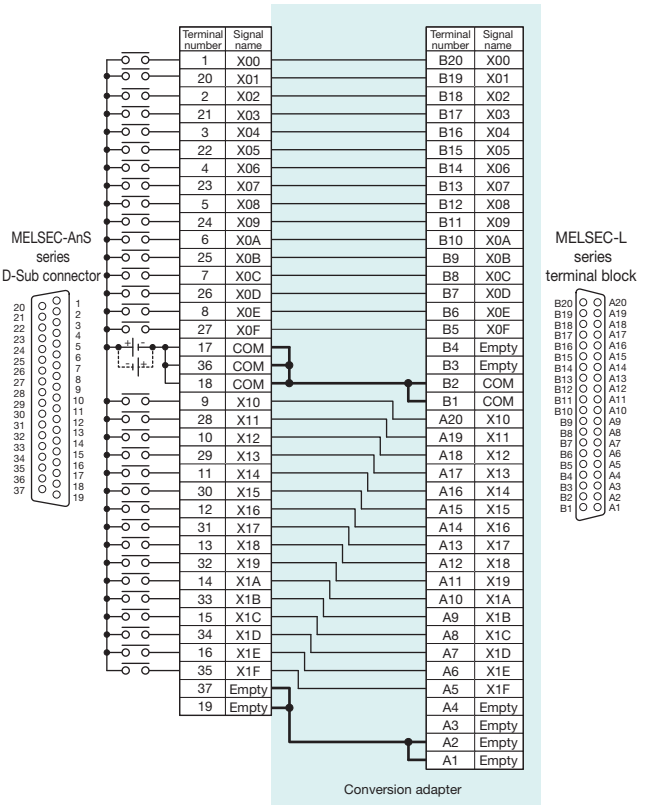

[Specification comparison chart]

Specification \ Model	MELSEC-AnS series A1SX81 (Sink/Source shared type)	MELSEC-AnS series A1SX81-S2 (Sink/Source shared type)	MELSEC-L series LX41C4 (Positive/Negative common shared type)
No. of input points	32 points	32 points	32 points
Isolation method	Photocoupler isolation	Photocoupler isolation	Photocoupler isolation
Rated input voltage	12VDC / 24VDC	24VDC	24VDC
Rated input current	Approx. 3mA / Approx. 7mA	Approx. 7mA	4mA TYP.
ON voltage / ON current	8VDC or more / 2mA or more	13VDC or more / 3.5mA or more	19VDC or more / 3mA or more
OFF voltage / OFF current	4VDC or less / 1mA or less	6VDC or less / 1.7mA or less	9VDC or less / 1.7mA or less
Input impedance	Approx. 3.3kΩ	Approx. 3.3kΩ	5.7kΩ
Response time OFF→ON	10ms or less (24VDC)	10ms or less	1/5/10/20/70ms or less
Response time ON→OFF	10ms or less (24VDC)	10ms or less	1/5/10/20/70ms or less
Internal current consumption	80mA (TYP. all points ON)	80mA (TYP. all points ON)	100mA (TYP. all points ON)
Wiring method for common	32 points/common	32 points/common	32 points/common
External interface	37-pin D-Sub connector	37-pin D-Sub connector	40-pin connector

Notes
1. When replacing A1SX81 and using a rated input voltage of 12VDC, the voltage needs to be changed to 24VDC.
2. For ▭ areas, verify that the MELSEC-L series module specifications satisfy the specifications of the connected device/equipment.
3. For detailed and general specifications not described in the specification comparison chart, refer to the user's manual of the module used. Note that the areas where the specifications differ between the MELSEC-AnS series and the MELSEC-L series are restricted in terms of specifications during replacement. Verify the specifications of the connected devices.

With A1SY81/A1SY81EP→LY41PT1P

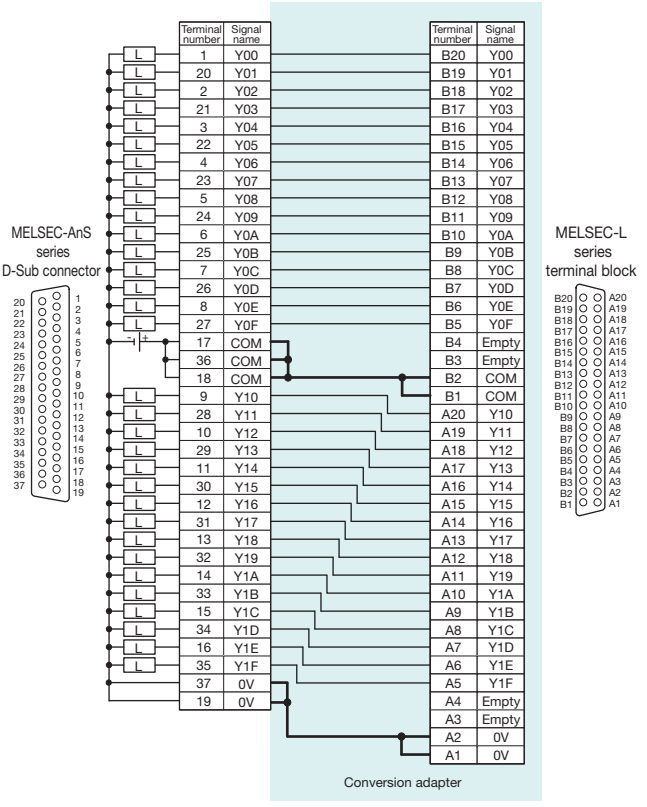

[Specification comparison chart]

Specification \ Model	MELSEC-AnS series A1SY81 (Source type)	MELSEC-AnS series A1SY81EP (Source type)	MELSEC-L series LY41PT1P (Source type)
No. of output points	32 points	32 points	32 points
Isolation method	Photocoupler isolation	Photocoupler isolation	Photocoupler isolation
Rated load voltage	12/24VDC	12/24VDC	12/24VDC
Maximum load current	0.1A/point 2A/common	0.1A/point, 2Apoint, 25°C) 0.05A/point, 1.6Apoint, (55°C)	0.1A/point 2A/common
Maximum rush current	0.4A 10ms or less	No restrictions (Overload protection function)	Current restrictions exist due to the overload protection function
OFF leakage current	0.1mA or less	0.1mA or less	0.1mA or less
ON maximum voltage drop	1.0VDC(TYP) 0.1A 2.5VDC(MAX) 0.1A	2.5VDC(0.1A Min) 3.5VDC(0.1A Max)	0.1VDC(TYP) 0.1A 0.2VDC(MAX) 0.1A
Response time OFF→ON	2ms or less	0.5ms or less	0.5ms or less
Response time ON→OFF	2ms or less (Resistance load)	1.5ms or less (Resistance load)	1ms or less (Rated load, resistance load)
Surge suppressor	Zener diode	Clamp diode	Zener diode
Fuse	3.2A (1 common/fuse) not replaceable	No	No
Protection function	No	Yes (Overheat protection and overload protection)	Yes (Overheat protection and overload protection)
Internal current consumption	500mA (TYP. all points ON)	500mA (TYP. all points ON)	140mA (TYP. all points ON)
Wiring method for common	32 points/common	32 points/common	32 points/common
External interface	37-pin D-Sub connector	37-pin D-Sub connector	40-pin connector

Notes
1. For ▭ areas, verify that the MELSEC-L series module specifications satisfy the specifications of the connected device/equipment.
2. For detailed and general specifications not described in the specification comparison chart, refer to the user's manual of the module used. Note that the areas where the specifications differ between the MELSEC-AnS series and the MELSEC-L series are restricted in terms of specifications during replacement. Verify the specifications of the connected devices.

For Analog Modules

1-module type

1) ERNT-ASLT64AD Terminal block (20P)→Terminal block (18P)

Conversion adapter model	MELSEC-AnS series module model	No. of channels	MELSEC-L series module model
ERNT-ASLT64AD	A1S64AD	4 channels	L60AD4

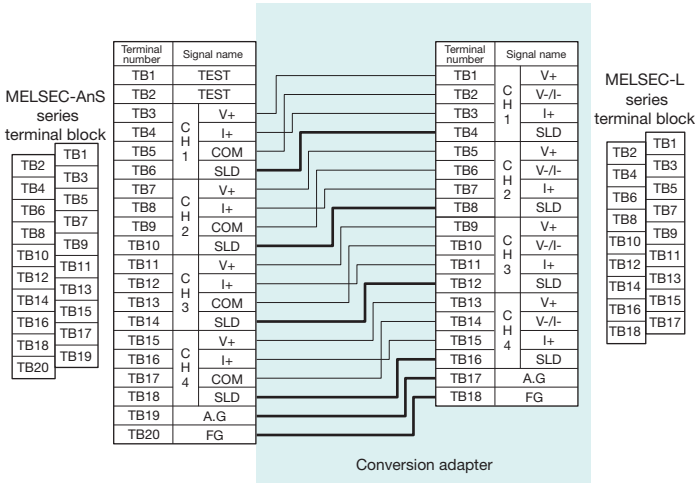

Notes
1. Be sure to ground the FG terminal (TB20).

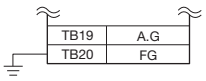

2. L60AD4 does not have an offset/gain setting terminal. For offset/gain setting, refer to the L60AD4 user's manual.

[Specification comparison chart]

Specification \ Model		MELSEC-AnS series A1S64AD	MELSEC-L series L60AD4
Analog input	Voltage	-10 to 0 to 10VDC (Input resistance: 1MΩ)	-10 to 10VDC (Input resistance: 1MΩ)
	Current	-20mA to 0 to 20mA (Input resistance: 250MΩ)	0 to 20mA DC (Input resistance: 250Ω)
Digital output		16-bit signed binary When set to 1/4000, -4096 to 4095 When set to 1/8000, -8192 to 8191 When set to 1/12000, -12288 to 12287	-20480 to 20479 (During the use of scaling function -32768 to 32767)

I/O characteristics

Analog input	Digital output value (With a 5V/20mA gain and 0V/0mA offset) When set to 1/4000	When set to 1/8000	When set to 1/12000
10V	4000	8000	12000
5V or 20mA	2000	4000	6000
0V or 0mA	0	0	0
-5V or -20mA	-2000	-4000	-6000
-10V	-4000	-8000	-12000

	Analog input range	Digital output value	Resolution
Voltage	0 to 10V	0 to 20000	500μV
	0 to 5V		250μV
	1 to 5V		200μV
	-10 to 10V	-20000 to 20000	500μV
	1 to 5V (Extended mode)	-5000 to 22500	200μV
	User range setting	-20000 to 20000	307μV

Maximum resolution

Analog input	Digital output value When set to 1/4000	When set to 1/8000	When set to 1/12000
Voltage input	2.5mV	1.25mV	0.83mV
Current input	10μA	5μA	3.33μA

	Analog input range	Digital output value	Resolution
Current	0 to 20mA	0 to 20000	1000nA
	4 to 20mA		800nA
	4 to 20mA (Extended mode)	-5000 to 22500	800nA
	User range setting	-20000 to 20000	1230nA

Overall accuracy

Analog input	Digital output value (With a 5V/20mA gain and 0V/0mA offset) When set to 1/4000	When set to 1/8000	When set to 1/12000	MELSEC-L series
Within ±1.0%	±40	±80	±120	Ambient temperature 25±5°C: Within ±0.1% (±20digit) Ambient temperature 0 to 55°C: Within ±0.2% (±40digit)

Maximum conversion speed		20ms/channel	High speed: 20μs/channel, Medium speed: 80μs/channel, Low speed: 1ms/channel
Absolute maximum input	Voltage	±15V	±15V
	Current	±30mA	30mA
No. of analog input points		4 channels/module	4 channels/module
Isolation method	Between input terminal and programmable controller power supply	Photocoupler isolation	Photocoupler isolation
	Between channels	Non-isolated	Non-isolated
No. of occupied points		32 points	16 points
Connected terminal block		20-point terminal block	18-point terminal block
Current consumption		0.4A	0.52A

Notes
3. For ☐ areas, verify that the MELSEC-L series module specifications satisfy the specifications of the connected device/equipment.
4. For detailed and general specifications not described in the specification comparison chart, refer to the user's manual of the module used. Note that the areas where the specifications differ between the MELSEC-AnS series and the MELSEC-L series are restricted in terms of specifications during replacement. Verify the specifications of the connected devices.

●Program precautions
1) With A1S64AD and L60AD4, the input/output signals (X, Y) and buffer memory address assignments differ. The sequence program needs to be changed.
2) L60AD4 has a faster conversion speed than A1S64AD. As a result, the possibility exists that noise not introduced in A1S64AD will be introduced as analog signals in L60AD4. In such a case, use an averaging processing function to remove the impact of the noise.

2) ERNT-ASLT62DA Terminal block (20P)→Terminal block (18P)

Conversion adapter model	MELSEC-AnS series module model	No. of channels	MELSEC-L series module model
ERNT-ASLT62DA	A1S62DA	2 channels	L60DA4

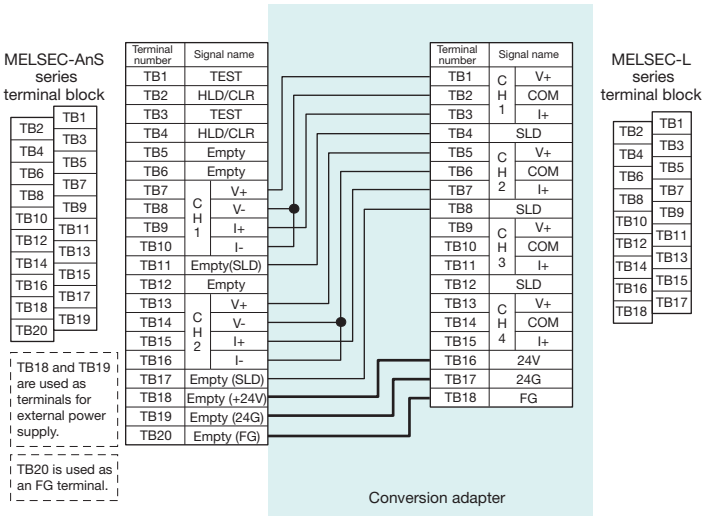

Notes
1. For the power supply terminals (TB16 and TB17) on the L60DA4 side, use terminal numbers TB18 and TB19 on the MELSEC-AnS series side.

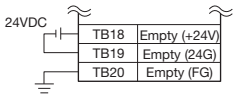

2. Ground the FG terminal (TB18) on the L60DA4 side using terminal number TB20 on the MELSEC-AnS series side.
3. L60DA4 does not have an offset/gain setting terminal or analog output hold/clear setting terminal. Analog output hold/clear setting needs to be performed using L60DA4 intelligent function module switch settings. For offset/gain and analog output hold/clear settings, refer to the L60DA4 user's manual.

[Specification comparison chart]

<table>
<tr><th colspan="4">Model / Specification</th><th colspan="6">MELSEC-AnS series</th><th colspan="4">MELSEC-L series</th></tr>
<tr><th colspan="4"></th><th colspan="6">A1S62DA</th><th colspan="4">L60DA4</th></tr>
<tr><td colspan="4">Digital input</td><td colspan="6">16-bit signed binary
1/4000: Voltage output -4000 to 4000, Current output 0 to 4000
1/8000: Voltage output -8000 to 8000, Current output 0 to 8000
1/12000: Voltage output -12000 to 12000, Current output 0 to 12000</td><td colspan="4">-20480 to 20479
(During the use of scaling function -32768 to 32767)</td></tr>
<tr><td colspan="2" rowspan="2">Analog output</td><td colspan="2">Voltage</td><td colspan="6">-10 to 0 to 10VDC (External load resistance: 2kΩ to 1MΩ)</td><td colspan="4">-10 to 10VDC (External load resistance value: 1kΩ to 1MΩ)</td></tr>
<tr><td colspan="2">Current</td><td colspan="6">0 to 20mA DC (External load resistance: 0Ω to 600Ω)</td><td colspan="4">0 to 20mA DC (External load resistance value: 0Ω to 600Ω)</td></tr>
<tr><td colspan="4" rowspan="8">I/O characteristics</td><td colspan="2">Resolution</td><td>1/4000</td><td>1/8000</td><td>1/12000</td><td>Analog output value</td><td colspan="2">Analog output range</td><td>Digital output value</td><td>Resolution</td></tr>
<tr><td rowspan="6">Voltage / Current</td><td rowspan="6">Digital input value</td><td>4000</td><td>8000</td><td>12000</td><td>10V</td><td rowspan="2">Voltage</td><td>0 to 5V</td><td rowspan="2">0 to 20000</td><td>250μV</td></tr>
<tr><td>2000</td><td>4000</td><td>6000</td><td>5V</td><td>1 to 5V</td><td>200μV</td></tr>
<tr><td>0</td><td>0</td><td>0</td><td>0V</td><td rowspan="2">Voltage</td><td>-10 to 10V</td><td rowspan="2">-20000 to 20000</td><td>500μV</td></tr>
<tr><td>-2000</td><td>-4000</td><td>-6000</td><td>-5V</td><td>User range setting</td><td>333μV</td></tr>
<tr><td>-4000</td><td>-8000</td><td>-12000</td><td>-10V</td><td rowspan="3">Current</td><td>0 to 20mA</td><td rowspan="2">0 to 20000</td><td>1000nA</td></tr>
<tr><td>4000</td><td>8000</td><td>12000</td><td>20mA</td><td>4 to 20mA</td><td>800nA</td></tr>
<tr><td>2000</td><td>4000</td><td>6000</td><td>12mA</td><td>User range setting</td><td>-20000 to 20000</td><td>700nA</td></tr>
<tr><td>0</td><td>0</td><td>0</td><td>4mA</td></tr>
<tr><td colspan="4">Maximum resolution</td><td colspan="6">1/4000: Voltage output 2.5mV (10V), Current output 5μA (20mA)
1/8000: Voltage output 1.25mV (10V), Current output 2.5μA (20mA)
1/12000: Voltage output 0.83mV (10V), Current output 1.7μA (20mA)</td><td colspan="4"></td></tr>
<tr><td colspan="4">Overall accuracy</td><td colspan="6">Voltage: ±1.0% (±100mV)
Current: ±1.0% (±200μA)</td><td colspan="4">At an ambient temperature of 25±5°C, within ±0.1%
(Voltage: ±10mV, Current: ±20μA)
At an ambient temperature of 0 to 55°C, within ±0.3%
(Voltage: ±30mV, Current: ±60μA)</td></tr>
<tr><td colspan="4">Maximum conversion speed</td><td colspan="6">Within 25ms / 2 channels
(Same for 1 channel)</td><td colspan="4">80μs/channel</td></tr>
<tr><td colspan="3" rowspan="2">Absolute maximum output</td><td>Voltage</td><td colspan="6">±12V</td><td colspan="4">–</td></tr>
<tr><td>Current</td><td colspan="6">28mA</td><td colspan="4">–</td></tr>
<tr><td colspan="4">No. of analog output points</td><td colspan="6">2 channels/module</td><td colspan="4">4 channels/module</td></tr>
<tr><td rowspan="4">Isolation method</td><td colspan="3">Between output terminal and programmable controller power supply</td><td colspan="6">Photocoupler isolation</td><td colspan="4">Photocoupler isolation</td></tr>
<tr><td colspan="3">Between channels</td><td colspan="6">Non-isolated</td><td colspan="4">Non-isolated</td></tr>
<tr><td colspan="3">Between external power supply and analog output</td><td colspan="6">–</td><td colspan="4">Transformer isolation</td></tr>
<tr><td colspan="3">No. of occupied points</td><td colspan="6">32 points</td><td colspan="4">16 points</td></tr>
<tr><td colspan="4">Connected terminal block</td><td colspan="6">20-point terminal block</td><td colspan="4">18-point terminal block</td></tr>
<tr><td colspan="4">Current consumption</td><td colspan="6">0.80A</td><td colspan="4">0.16A</td></tr>
<tr><td colspan="3" rowspan="2">External power supply</td><td>Voltage</td><td colspan="6">–</td><td colspan="4">24VDC +20%, -15%</td></tr>
<tr><td>Current</td><td colspan="6">–</td><td colspan="4">0.18A</td></tr>
</table>

Notes
4. For ▭ areas, verify that the MELSEC-L series module specifications satisfy the specifications of the connected device/equipment.
5. For detailed and general specifications not described in the specification comparison chart, refer to the user's manual of the module used. Note that the areas where the specifications differ between the MELSEC-AnS series and the MELSEC-L series are restricted in terms of specifications during replacement. Verify the specifications of the connected devices.

●Program precautions
1) With A1S62DA and L60DA4, the input/output signals (X, Y) and buffer memory address assignments differ. The sequence program needs to be changed.
2) The L60DA4 CH3 and CH4 are not applicable.

For High-Speed Counter Modules

1-module type

1) ERNT-ASLTD61 Terminal block (20P)→Connector (40P)

Conversion adapter model	MELSEC-AnS series module model	No. of channels	MELSEC-L series module model
ERNT-ASLTD61	A1SD61	1 channel	LD62

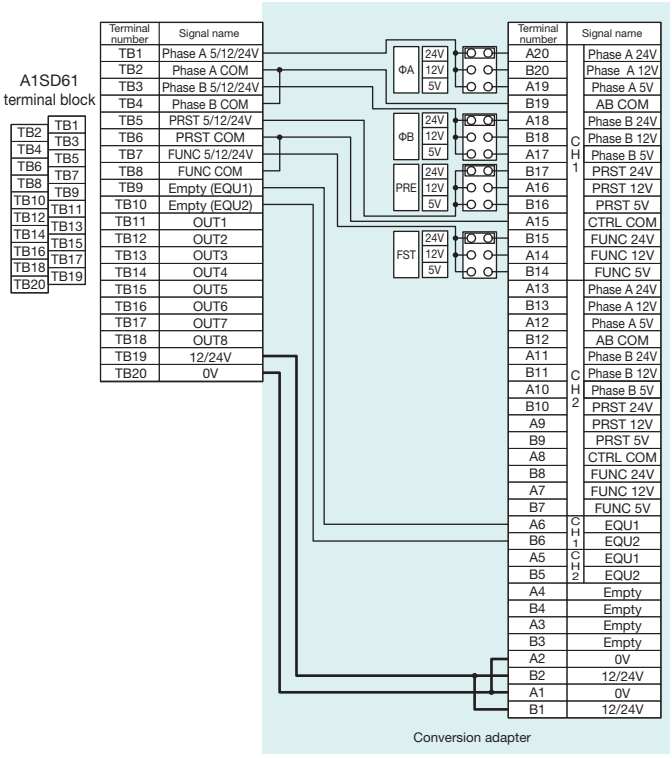

Notes

1. Set the short bar of the setting pin located inside the conversion adapter to 24V during 24V input, to 12V during 12V input, and to 5V during 5V input, in accordance with the input voltage of the phase A pulse input ΦA, the phase B pulse input ΦB, the preset input PRE, and the function start input FST. Note that, at the time of factory shipment, all channels are set to 24V.
2. LD62 does not have an A1SD61 limit switch output function. The OUT1 (TB11) to OUT8 (TB18) terminals therefore cannot be used. In a case where a substitution is to be made using a LD62 matching output function [CH1 EQU1 terminal (A6), CH1 EQU2 terminal (B6)], use the A1SD61 empty terminals [EQU1 terminal (TB9), EQU2 terminal (TB10)]. Note that specifications will differ, such as a fewer number of settings, etc.

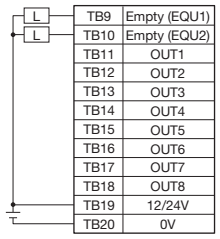

3. After setting the voltage setting pin, connect the external wiring.

[Specification comparison chart]

Specification \ Model		MELSEC-AnS series		MELSEC-L series		
		A1SD61		LD62		
Counting speed switch settings		Switched by setting pin		Switched by intelligent function module switch setting		
		50k side	10k side	200k (100k to 200kPPS)	100k (10k to 100kPPS)	10k (10kPPS or less)
No. of channels		1 channel		2 channels		
Count input signal	Phase	1-phase input 2-phase input		1-phase input (1x/2x) 2-phase input (1x/2x/4x) CW/CCW input		
	Signal level (ΦA, ΦB)	5/12/24VDC 2 to 5mA				
Counter	Maximum counting speed	1-phase input: 50kPPS 2-phase input: 50kPPS	1-phase input: 10kPPS 2-phase input: 7kPPS	200kPPS (*1)	100kPPS (*1)	10kPPS (*1)
	Counting range	32-bit signed binary -2147483648 to 2147483647				
	Model	UP/DOWN preset counter + Ring counter function				
	Minimum count pulse width (duty ratio: 50%)	20µs, 10µs, 10µs (1- or 2-phase input)	100µs, 50µs, 50µs (1-phase input) 142µs, 71µs, 71µs (2-phase input)	5µs, 2.5µs, 2.5µs During 2-phase input Minimum phase difference: 1.25µs	10µs, 5µs, 5µs During 2-phase input Minimum phase difference: 2.5µs	100µs, 50µs, 50µs During 2-phase input Minimum phase difference: 25µs
Limit switch output	Comparison range	32-bit signed binary		–		
	Comparison result	NO contact operation dog ON address ≤ Count value ≤ Dog OFF address NC contact operation dog OFF address ≤ Count value ≤ Dog ON address		–		
Coincidence output	Comparison range	–		32-bit signed binary		
	Comparison result	–		Setting value < Count value Setting value = Count value Setting value > Count value		
External input	Preset Function start	5/12/24VDC 2 to 5mA				
External output	Limit switch output	Transistor (open collector) output 12/24VDC, 0.1A/point, 0.8A/common		–		
	Coincidence output	–		Transistor (sink type) output 2 points/channels 12/24VDC, 0.5A/point, 2A/common		
No. of I/O occupied points		32 points		16 points		
Connection method		20-point terminal block		40-pin connector		
Internal current consumption (5VDC)		0.35A		0.31A		

*1: The counting speed is affected by the pulse rise time and fall time t. The countable counting speed is as shown in the table below.
When a pulse with a large rise/fall time is counted, miscounting may occur. Caution is required.

Rise/Fall time \ Counting speed switch setting	Common to 1-phase input and 2-phase input		
	200k	100k	10k
t=1.25µs or less	200kPPS	100kPPS	10kPPS
t=2.5µs or less	100kPPS	100kPPS	10kPPS
t=25µs or less	–	10kPPS	10kPPS
t=500µs	–	–	500PPS

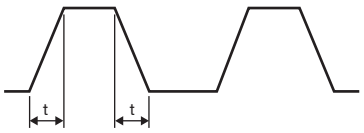

Notes
3. For ▭ areas, verify that the MELSEC-L series module specifications satisfy the specifications of the connected device/equipment.
4. For detailed and general specifications not described in the specification comparison chart, refer to the user's manual of the module used. Note that the areas where the specifications differ between the MELSEC-AnS series and the MELSEC-L series are restricted in terms of specifications during replacement. Verify the specifications of the connected devices.

●Program precautions
1) With A1SD61 and LD62, the input/output signals (X, Y) and buffer memory address assignments differ. The sequence program needs to be changed.
2) The LD62 coincidence output function is used as a substitute for the A1SD61 limit switch output function. The sequence program needs to be changed.
3) For LD62, use the CH1 input/output signals (X, Y) and buffer memory address. CH2 does not operate.
4) The counting speed setting set using the setting pin with A1SD61 is set using the intelligent function module switch setting with LD62.

2) ERNT-ASLTD62 Terminal block (20P)→Connector (40P)

Conversion adapter model	MELSEC-AnS series module model	No. of channels	MELSEC-L series module model
ERNT-ASLTD62	A1SD62	2 channels	LD62

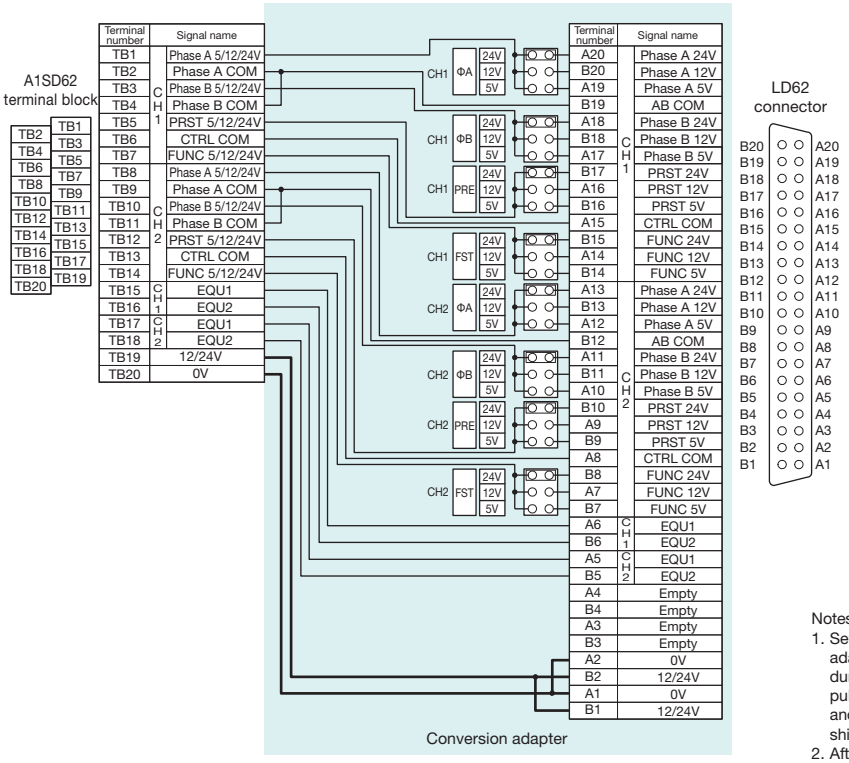

Notes
1. Set the short bar of the setting pin located inside the conversion adapter to 24V during [24V] input, to 12V during [12V] input, and to 5V during [5V] input, in accordance with the input voltage of the phase A pulse input [ΦA], the phase B pulse input [ΦB], the preset input [PRE], and the function start input [FST]. Note that, at the time of factory shipment, all channels are set to [24V].
2. After setting the voltage setting pin, connect the external wiring.

[Specification comparison chart]

Specification \ Model		MELSEC-AnS series		MELSEC-L series		
		A1SD62		LD62		
Counting speed switch settings		Switched by setting pin		Switched by intelligent function module switch setting		
		100k side	10k side	200k (100k to 200kPPS)	100k (10k to 100kPPS)	10k (10kPPS or less)
No. of channels		2 channels				
Count input signal	Phase	1-phase input 2-phase input		1-phase input (1x/2x) 2-phase input (1x/2x/4x) CW/CCW input		
	Signal level (ΦA, ΦB)	5/12/24VDC 2 to 5mA				
Counter	Maximum counting speed	1-phase input: 100kPPS 2-phase input: 100kPPS	1-phase input: 10kPPS 2-phase input: 7kPPS	200kPPS (*1)	100kPPS (*1)	10kPPS (*1)
	Counting range	24-bit binary 0 to 16777215		32-bit signed binary -2147483648 to 2147483647		
	Model	UP/DOWN preset counter + Ring counter function				
	Minimum count pulse width (duty ratio: 50%)	10µs, 5µs, 5µs (1- or 2-phase input)	100µs, 50µs, 50µs (1-phase input) 142µs, 71µs, 71µs (2-phase input)	5µs, 2.5µs, 2.5µs During 2-phase input Minimum phase difference: 1.25µs	10µs, 5µs, 5µs During 2-phase input Minimum phase difference: 2.5µs	100µs, 50µs, 50µs During 2-phase input Minimum phase difference: 25µs
Coincidence output	Comparison range	24-bit binary		32-bit signed binary		
	Comparison result	Setting value < Count value Setting value = Count value Setting value > Count value				
External input	Preset Function start	5/12/24VDC 2 to 5mA				
External output	Coincidence output	Transistor (sink type) output 2 points/channels 12/24VDC, 0.5A/point, 2A/common				
No. of I/O occupied points		32 points		16 points		
Connection method		20-point terminal block		40-pin connector		
Internal current consumption (5VDC)		0.1A		0.31A		

*1: The counting speed is affected by the pulse rise time and fall time t. The countable counting speed is as shown in the table below.
When a pulse with a large rise/fall time is counted, miscounting may occur. Caution is required.

Rise/Fall time \ Counting speed switch setting	Common to 1-phase input and 2-phase input		
	200k	100k	10k
t=1.25µs or less	200kPPS	100kPPS	10kPPS
t=2.5µs or less	100kPPS	100kPPS	10kPPS
t=25µs or less	–	10kPPS	10kPPS
t=500µs	–	–	500PPS

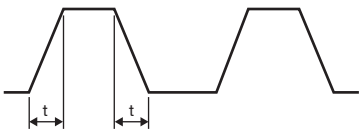

Notes
2. For ▭ areas, verify that the MELSEC-L series module specifications satisfy the specifications of the connected device/equipment.
3. For detailed and general specifications not described in the specification comparison chart, refer to the user's manual of the module used. Note that the areas where the specifications differ between the MELSEC-AnS series and the MELSEC-L series are restricted in terms of specifications during replacement. Verify the specifications of the connected devices.

●Program precautions
1) With A1SD62 and LD62, the input/output signals (X, Y) and buffer memory address assignments differ. The sequence program needs to be changed.
2) The counting speed setting set using the setting pin with A1SD62 is set using the intelligent function module switch setting with LD62.

Base Adapter

Specifications

- The MELSEC-L series can be installed using the mounting holes of the MELSEC-AnS series base unit. (There is no need to drill holes for mounting.)
- The base adapter width dimension is the same as that of the MELSEC-AnS series base unit prior to replacement. As a result, the following precautions apply even if you do not use a space module (LG69).

Base adapter model	MELSEC-AnS series compatible base unit model name	Replacement Precautions
ERNT-ASLB38	A1S38B	–
	A1S38HB	
ERNT-ASLB35	A1S35B	–
ERNT-ASLB33	A1S33B	If extension blocks are connected, the number of modules that can be mounted is two (*1).
ERNT-ASLB32	A1S32B	If extension blocks are connected, the number of modules that can be mounted is one (*1).
ERNT-ASLBJ	A1SJCPU	–
	A1SJCPU-S3	
	A1SJHCPU	
ERNT-ASLB68	A1S68B	–
ERNT-ASLB65	A1S65B	–
ERNT-ASLB58	A1S58B	–
ERNT-ASLB55	A1S55B	–
ERNT-ASLB52	A1S52B	The number of modules that can be mounted is one (*1).

*1: Module with a width dimension of 28.5 mm.

Mounting Dimensions

- The base adapter mounting holes (four) share the same dimensions as those for the MELSEC-AnS series base unit. There is no need to drill additional holes on the control panel.
- When replacing the MELSEC-AnS series with the MELSEC-L series, the slot positions where the module is mounted are different. Adjust the wiring length prior to use.

◎ **MELSEC-L series**

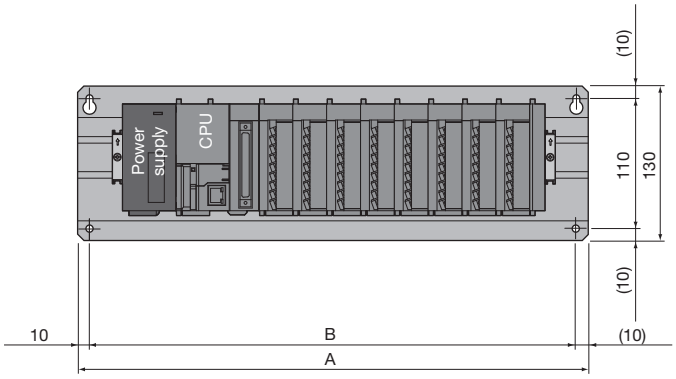

◎ **(Reference) MELSEC-AnS series**

Unit: mm

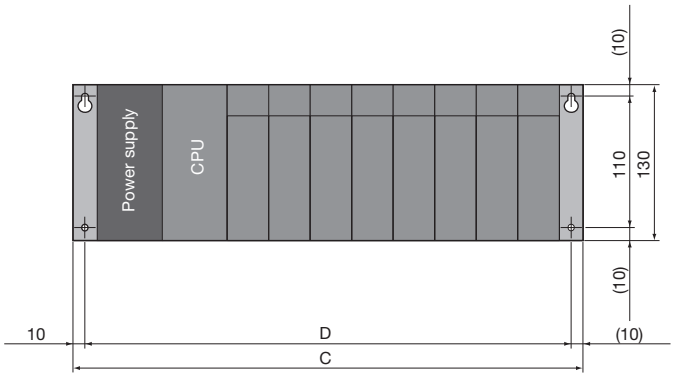

Base adapter model	A	B	MELSEC-AnS series base unit model	C	D
ERNT-ASLB38	430	410	A1S38B A1S38HB	430	410
ERNT-ASLB35	325	305	A1S35B	325	305
ERNT-ASLB33	255	235	A1S33B	255	235
ERNT-ASLB32	220	200	A1S32B	220	200
ERNT-ASLBJ	330	310	A1SJCPU A1SJCPU-S3 A1SJHCPU	330	310
ERNT-ASLB68	420	400	A1S68B	420	400
ERNT-ASLB65	315	295	A1S65B	315	295
ERNT-ASLB58	365	345	A1S58B	365	345
ERNT-ASLB55	260	240	A1S55B	260	240
ERNT-ASLB52	155	135	A1S52B	155	135

Usage Precautions

The conversion adapter is used to compensate the difference of the pin assignment when the MELSEC-AnS series module is replaced with the MELSEC-L series module.
When replacing MELSEC-AnS series with MELSEC-L series, be sure to refer to the manual of each module of the MELSEC-L series to verify the differences in performance, function, CPU input/output signals, buffer memory addresses, and the like prior to use.
We also recommend that you refer to the “Transition from MELSEC-AnS/QnAS (Small Type) Series to L Series Handbook” published by Mitsubishi Electric.

Module Width

1) The module width dimension is smaller (34.5 mm → 28.5 mm) and the wiring area is smaller, requiring verification during mounting.

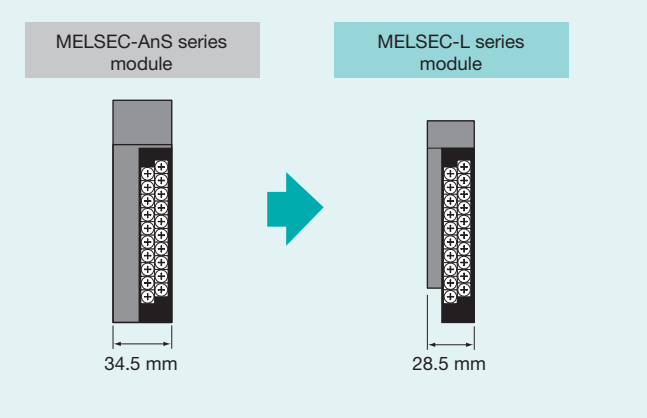

2) If the wiring interferes with a mounted module, lift the wiring forward, etc., so that there is no interference.

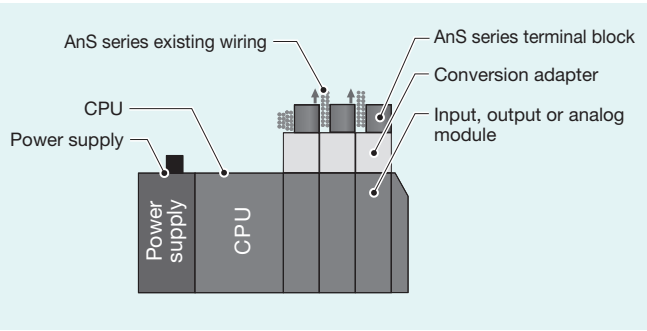

3) When the replacement method described in 2) above is not possible, consider using the Mitsubishi LG69 space module.

2-2

4) If the system after replacement does not fit in the installation space (width), consider using extension blocks for branch connection.

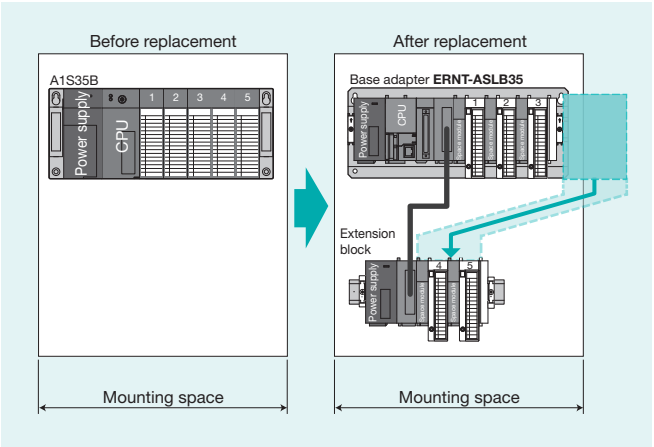

5) Do not use this if the MELSEC-L series system extends beyond the base adapter width dimension.

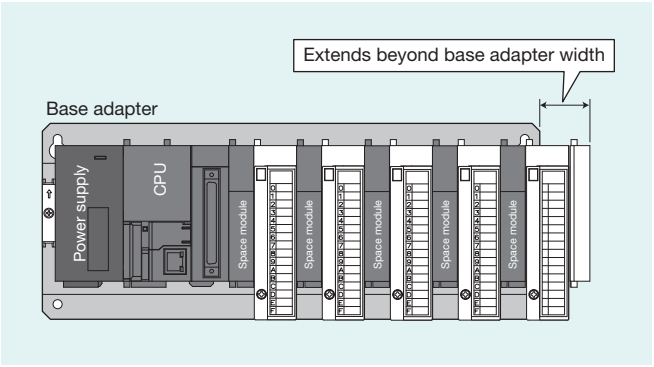

Depth / Height

When using the base adapter

The depth increases by 50.1 to 51.3 mm.

MELSEC-AnS :MELSEC-AnS series MELSEC-L :MELSEC-L series

Conversion adapter	ERNT-ASLTXY10 ERNT-ASLTX40 ERNT-ASLTX80 ERNT-ASLTY22 ERNT-ASLTY40 ERNT-ASLTY50 ERNT-ASLTY80 ERNT-ASLT64AD ERNT-ASLT62DA ERNT-ASLTD61 ERNT-ASLTD62	ERNT-ASLCXY81
Depth	51.3 mm increase	50.1 mm increase
Mounting diagram	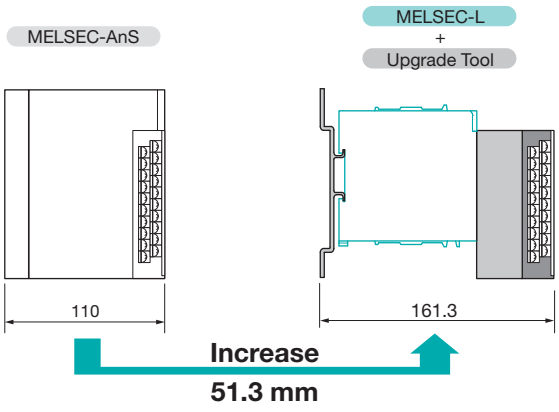	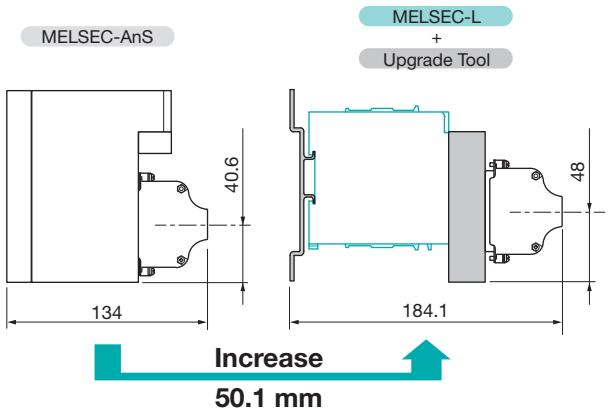

When using the DIN rail

The depth increases by 37.3 to 38.5 mm, and the height increases by 5.2 mm toward the lower side.

MELSEC-AnS :MELSEC-AnS series MELSEC-L :MELSEC-L series

Conversion adapter	ERNT-ASLTXY10 ERNT-ASLTX40 ERNT-ASLTX80 ERNT-ASLTY22 ERNT-ASLTY40 ERNT-ASLTY50 ERNT-ASLTY80 ERNT-ASLT64AD ERNT-ASLT62DA ERNT-ASLTD61 ERNT-ASLTD62	ERNT-ASLCXY81
Depth	38.5 mm increase	37.3 mm increase
Height	5.2 mm increase	5.2 mm increase
Mounting diagram	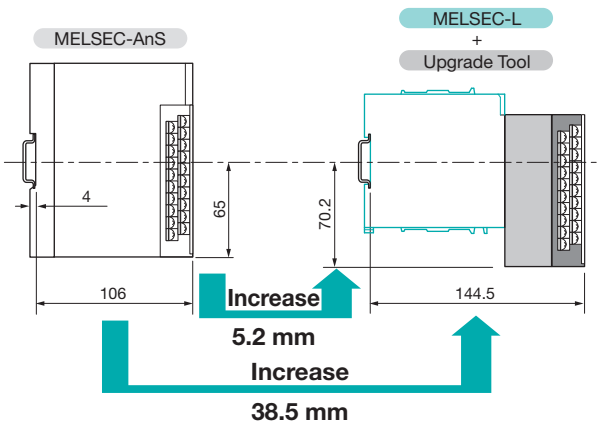	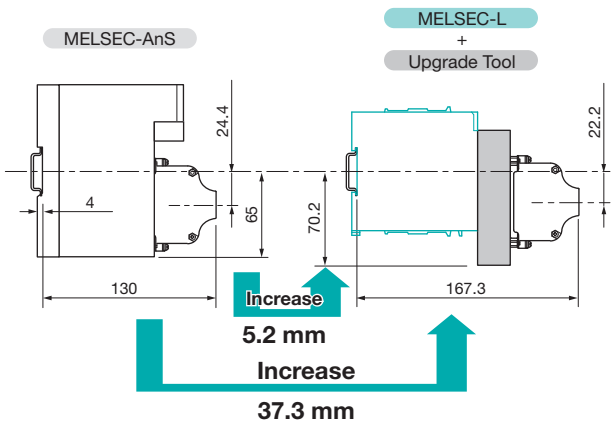

Terminal Block Cover

The terminal block cover of the MELSEC-AnS series is larger than the MELSEC-L series module width, and therefore needs to be replaced with the terminal block cover provided with the conversion adapter.

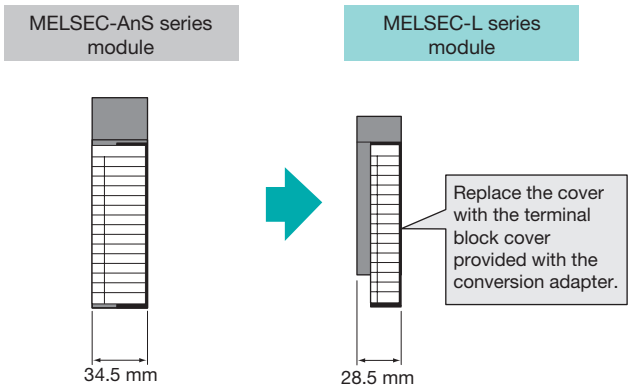

External Dimensions

Conversion Adapter

Model name:

ERNT-ASLTXY10
ERNT-ASLTX40
ERNT-ASLTX80
ERNT-ASLTY22
ERNT-ASLTY40
ERNT-ASLTY50
ERNT-ASLTY80
ERNT-ASLT64AD
ERNT-ASLT62DA

Unit: mm

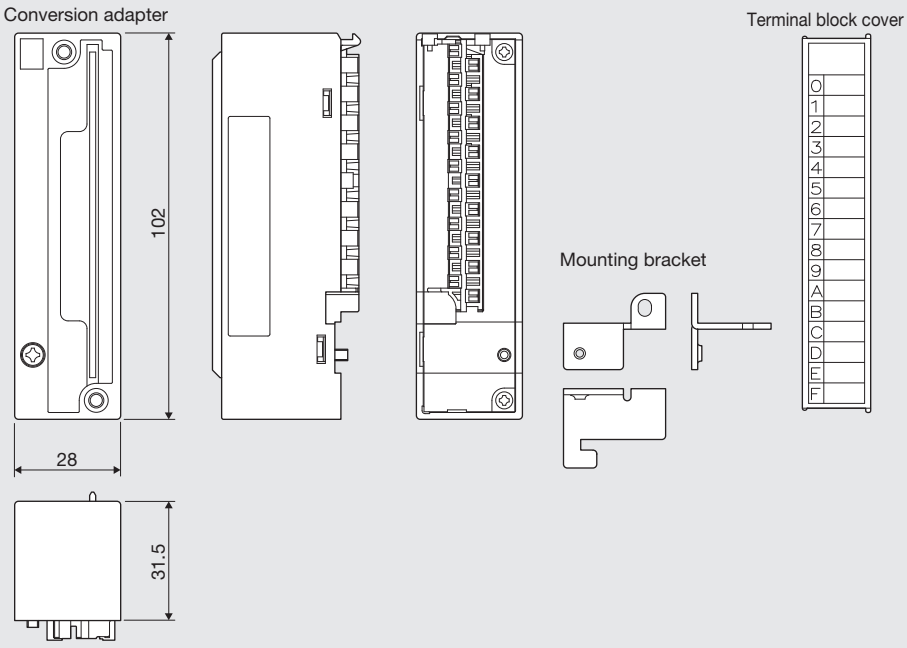

Weight: 75g

Model name:

ERNT-ASLCXY81

Unit: mm

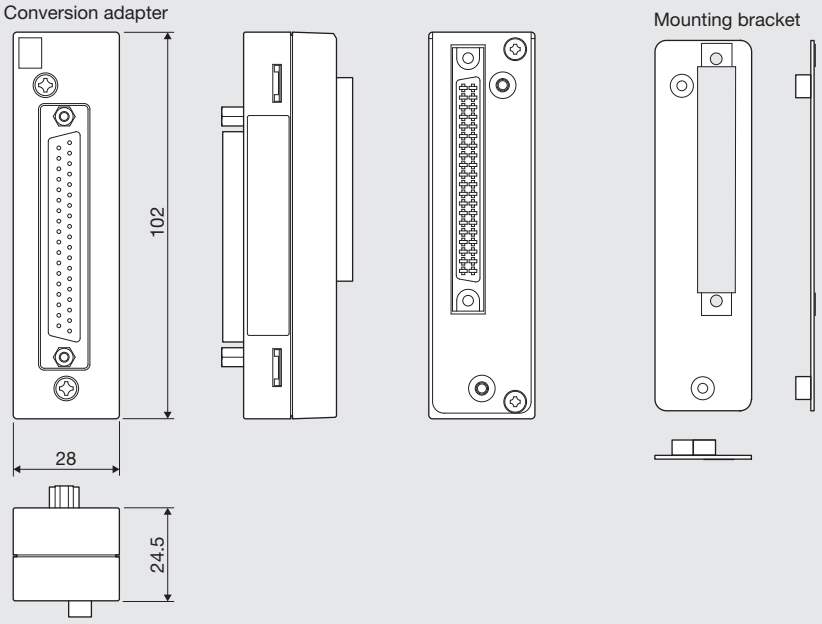

Weight: 95g

Model name:

ERNT-ASLTD61
ERNT-ASLTD62

Unit: mm

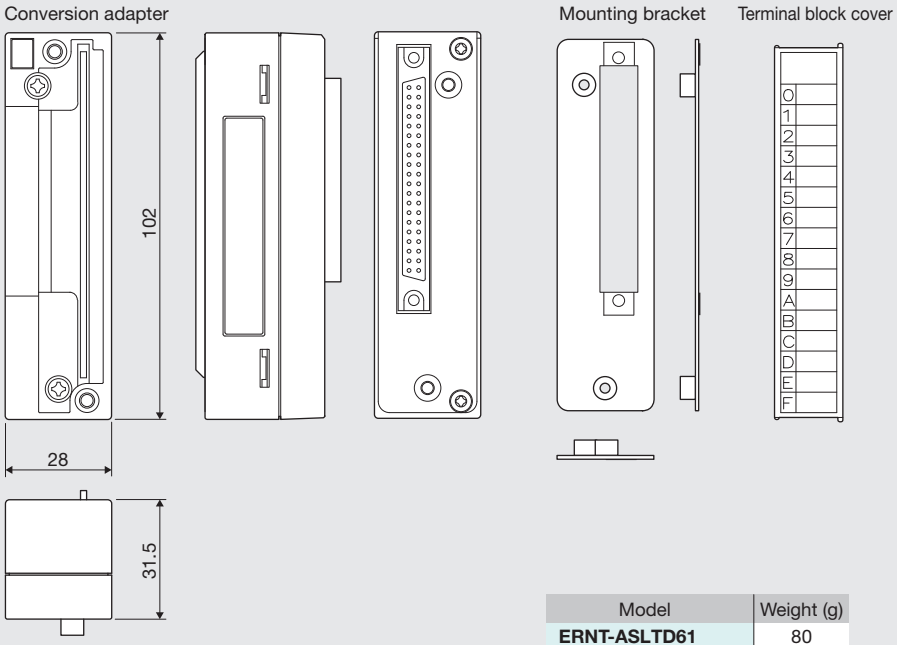

Model	Weight (g)
ERNT-ASLTD61	80
ERNT-ASLTD62	85

Base Adapter

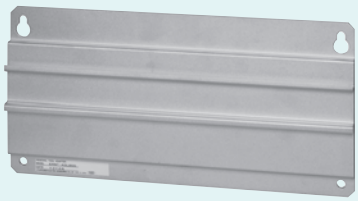

Model name:

ERNT-ASLB38
ERNT-ASLB35
ERNT-ASLB33
ERNT-ASLB32
ERNT-ASLBJ
ERNT-ASLB68
ERNT-ASLB65
ERNT-ASLB58
ERNT-ASLB55
ERNT-ASLB52

Unit: mm

Base adapter

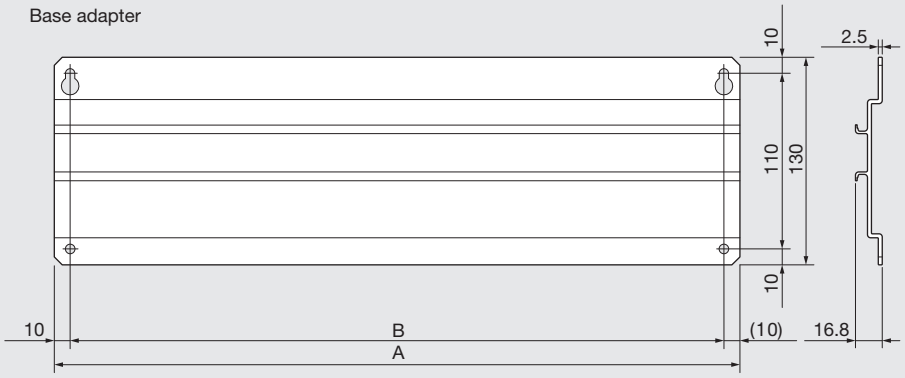

Model	A	B	Weight (g)
ERNT-ASLB38	430	410	485
ERNT-ASLB35	325	305	375
ERNT-ASLB33	255	235	300
ERNT-ASLB32	220	200	265
ERNT-ASLBJ	330	310	380
ERNT-ASLB68	420	400	475
ERNT-ASLB65	315	295	365
ERNT-ASLB58	365	345	415
ERNT-ASLB55	260	240	305
ERNT-ASLB52	155	135	200

Retaining clip

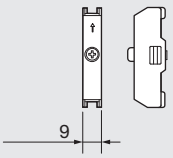

AnS Q series MELSEC-AnS Series ⇨ MELSEC-Q Series Upgrade Tool

Upgrading from the MELSEC-AnS Series to the MELSEC-Q Series

Simplifies replacement with the MELSEC-Q series
The upgrade tool makes it easy to replace the Mitsubishi Electric programmable controller MELSEC-AnS series with the MELSEC-Q series.

Significantly shortens the time required for input, output, analog, high-speed counter, temperature input, and temperature control module wiring, and significantly reduces wiring errors
- The upgrade tool allows you to connect the wiring connected to the MELSEC-AnS series input, output, analog, high-speed counter, temperature input, and temperature control modules as is to the MELSEC-Q series using a conversion adapter. (Some power supply and common terminal connection changes required.)
- By using a base adapter, the MELSEC-Q series can be installed using the MELSEC-AnS series mounting holes. (Additional drilling of holes is not required.) Compatible with DIN rail installation as well.

Permits reuse of sequence programs
The upgrade tool allows you to change from the MELSEC-AnS series to the MELSEC-Q series and reuse programs by changing the PLC type in the Mitsubishi Electric programming software GX Developer.

Product Overview

The MELSEC-AnS series / MELSEC-Q series upgrade tool comprises a “conversion adapter” that changes the existing wiring connected to the Mitsubishi Electric programmable controller MELSEC-AnS series modules to wiring applicable to the modules of the MELSEC-Q series, and a “base adapter” that makes it possible to install the MELSEC-Q series using the mounting holes of the MELSEC-AnS series base unit. This upgrade tool also includes a “conversion adapter DIN rail mounting bracket” required when using a conversion adapter with a fixed during DIN rail mounting.

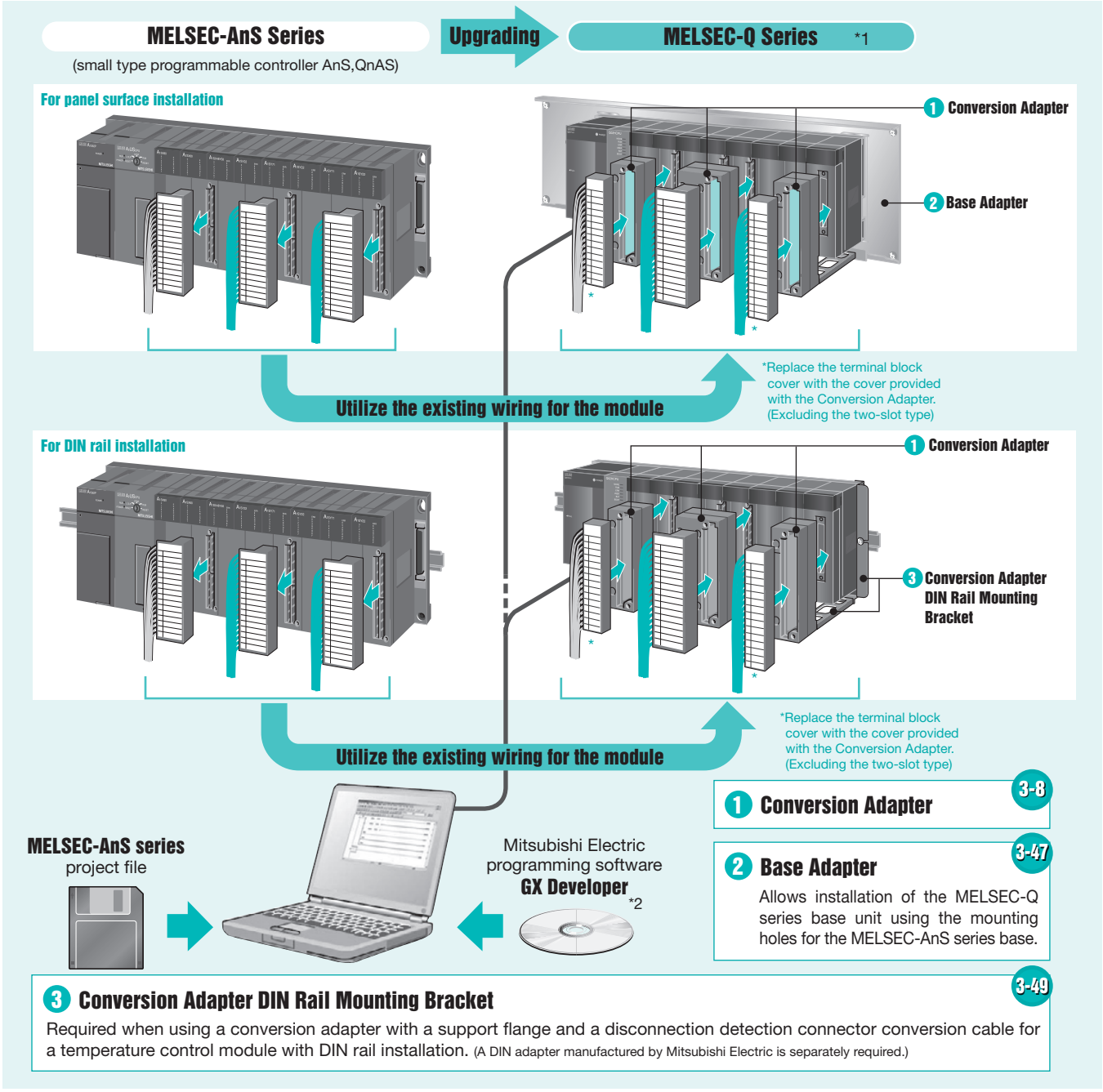

1 Conversion Adapter 3-8

2 Base Adapter 3-47

Allows installation of the MELSEC-Q series base unit using the mounting holes for the MELSEC-AnS series base.

3 Conversion Adapter DIN Rail Mounting Bracket 3-49

Required when using a conversion adapter with a support flange and a disconnection detection connector conversion cable for a temperature control module with DIN rail installation. (A DIN adapter manufactured by Mitsubishi Electric is separately required.)

*1: When replacing the MELSEC-AnS series with the MELSEC-Q series, verification of the mounting is required due to the change in module width and depth dimensions. For details, refer to the “Usage precautions” (page 3-50) in this catalog.
*2: Programs can be reused when changing from the MELSEC-AnS series (existing program) to the MELSEC-Q series by changing the PLC type in the Mitsubishi Electric programming software GX Developer. For details, refer to the GX Developer Operating Manual. Tools that support program replacement with the Q series are also provided by Mitsubishi Electric.

If the wiring interferes with an adjacent module, wiring space can be secured by utilizing the AnS-size Q series large type base unit.

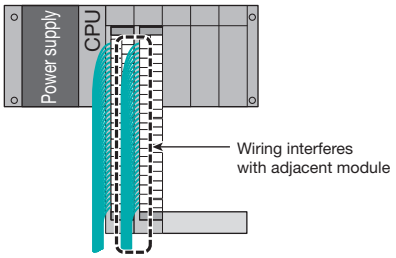

MITSUBISHI ELECTRIC CORPORATION **For MELSEC-AnS Series (small type)⇨MELSEC-Q Series**

Upgrading using the AnS-size Q series large type base unit

The slot width of the AnS-size Q series large type base unit is the same as the slot width of the MELSEC-AnS series (small type) base unit, alleviating wiring interference with adjacent modules.

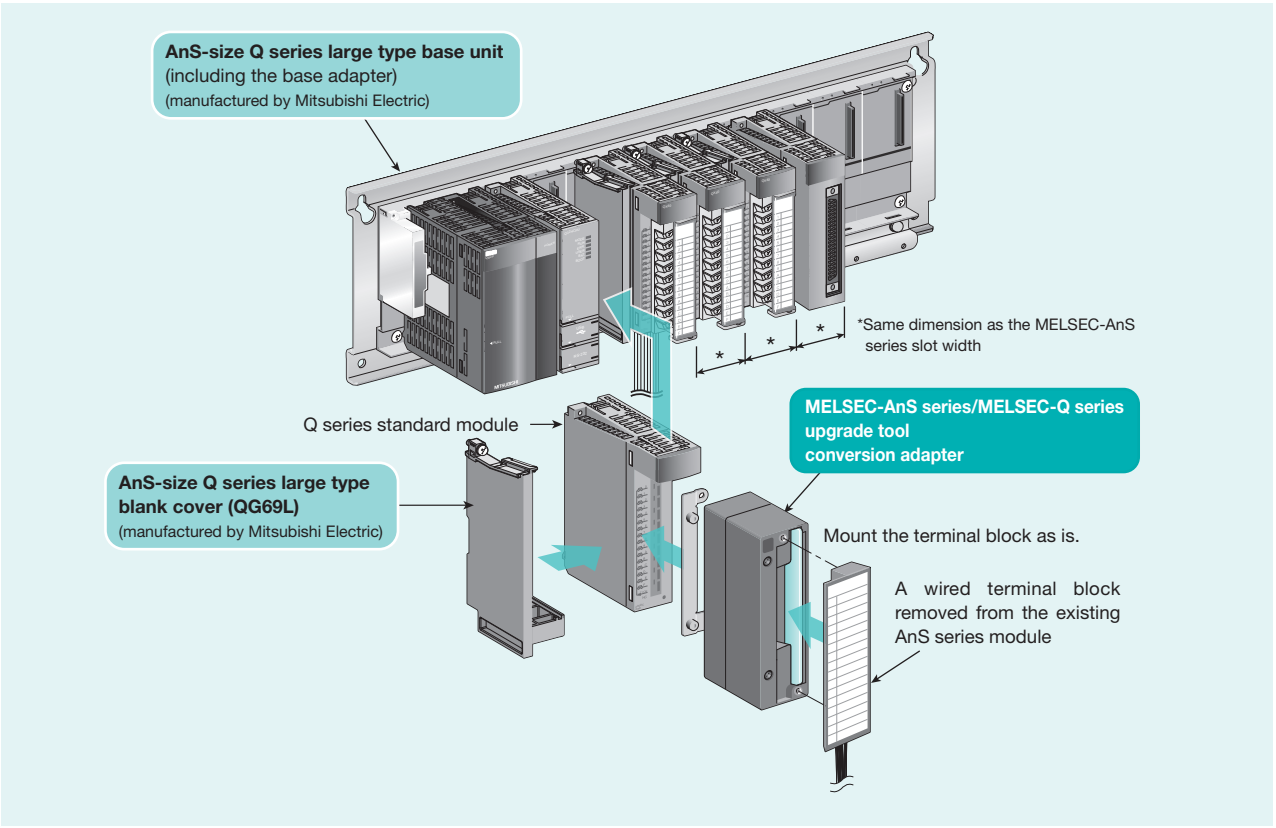

- The AnS-size Q series large type base unit (panel mounting type) has the same dimensions as the MELSEC-AnS (small type) series. There is no need to drill holes for mounting during installation.
- The AnS-size Q series large type base unit is provided with screw holes for securing the fixture that comes with the conversion adapter.
- A 2-slot type conversion adapter and a partial 1-slot type conversion adapter are not applicable. For details, see the Model List (page 3-5 to 3-6).

AnS-size Q Series Large Type Base Unit List

[Panel mounting type]

AnS series model	Q series large type base model
A1S35B	Q35BLS
A1S38B	Q38BLS
A1S65B	Q65BLS
A1S68B	Q68BLS
A1S55B	Q55BLS

[DIN rail mounting type]

AnS series model	Q series large type module model
A1S35B	Q35BLS-D
A1S38B	Q38BLS-D
A1S65B	Q65BLS-D
A1S68B	Q68BLS-D
A1S55B	Q55BLS-D

AnS-size Q Series Large Type Blank Cover

AnS series model	Q series large type blank cover model
–	QG69LS

Types of Conversion Adapters

There are two types of conversion adapters: a conversion adapter without a support flange for a terminal block type, and a conversion adapter with a support flange for a connector type.

When the MELSEC-Q series module is a "terminal block type" after replacement

Conversion adapter without support flange

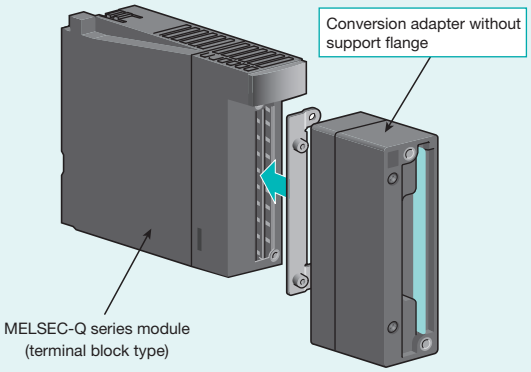

Base adapter ····· Use as necessary
Conversion adapter DIN rail mounting bracket ···· Not required

When the MELSEC-Q series module is a "connector type" after replacement

Conversion adapter with support flange

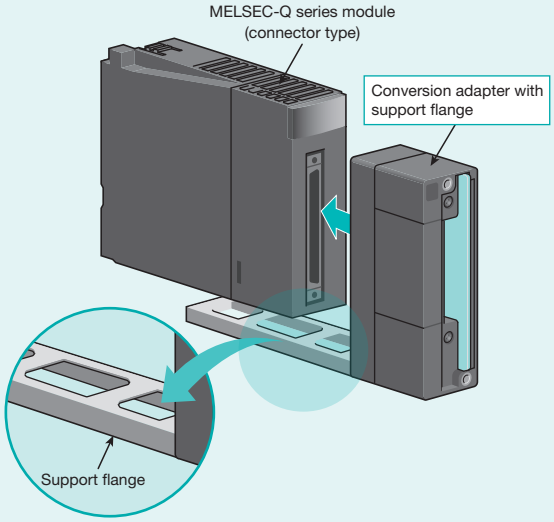

The support flange of the conversion adapter is secured using the base adapter (with panel surface mounting) or the conversion adapter DIN rail mounting bracket (with DIN rail mounting).

Further, a temperature control module with a disconnection detection function converts the wiring via a "disconnection detection connector conversion cable" in the left slot side of the MELSEC-Q series module (Q64TC□□BWN).

Left slot side of MELSEC-Q series module (Q64TC□□BWN)

Disconnection detection connector conversion cable

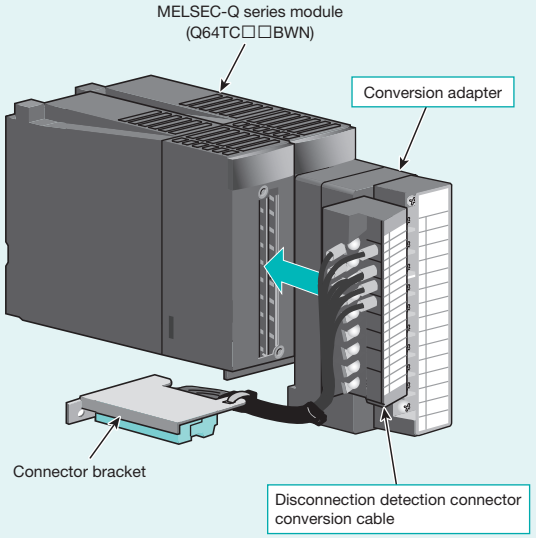

The connector bracket of the disconnection detection connector conversion cable is secured using the base adapter (with panel surface mounting) or the conversion adapter DIN rail mounting bracket (with DIN rail mounting).

Installing the conversion adapter with support flange

When using the conversion adapter with a support flange, reliably secure the support flange to the base adapter (with panel surface mounting) or conversion adapter DIN rail mounting bracket (with DIN rail mounting) using screws.

Panel surface installation

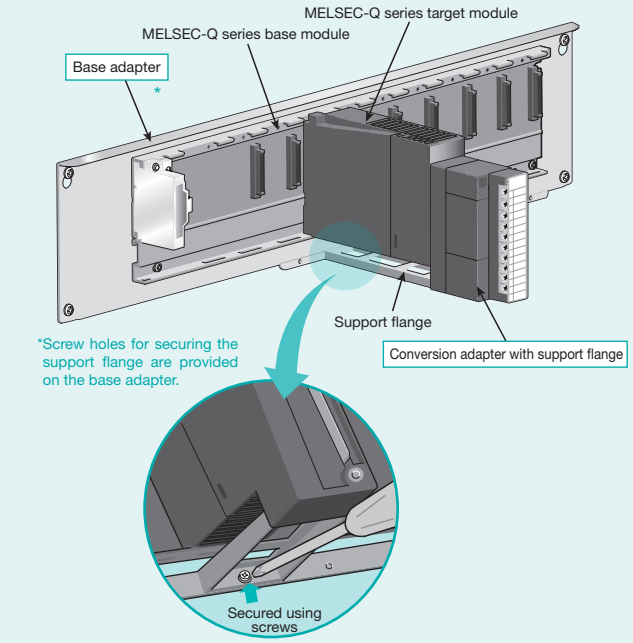

DIN rail installation

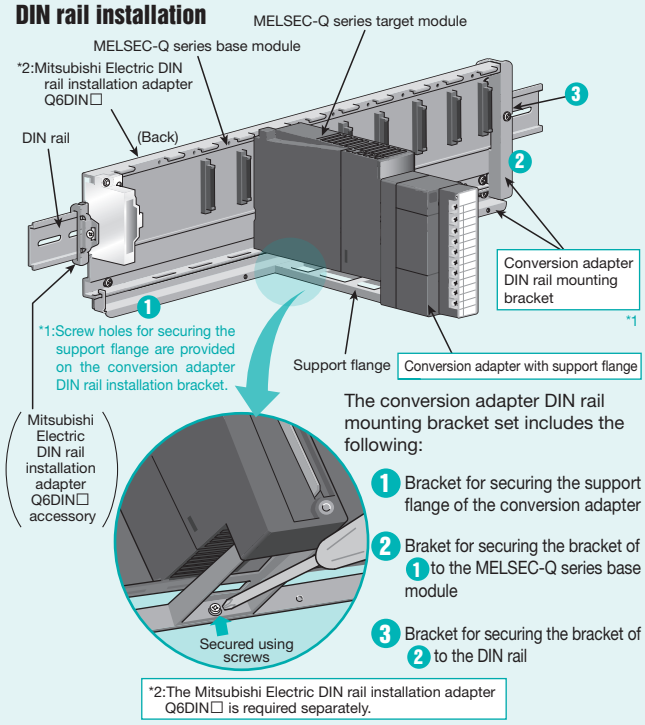

The conversion adapter DIN rail mounting bracket set includes the following:

1. Bracket for securing the support flange of the conversion adapter
2. Braket for securing the bracket of 1 to the MELSEC-Q series base module
3. Bracket for securing the bracket of 2 to the DIN rail

*2:The Mitsubishi Electric DIN rail installation adapter Q6DIN☐ is required separately.

Installing the disconnection detection connector conversion cable

The disconnection detection connector conversion cable requires a connector bracket to be secured to the base adapter (with panel surface mounting) or the conversion adapter DIN rail mounting bracket (with DIN rail mounting) using screws.

Panel surface installation

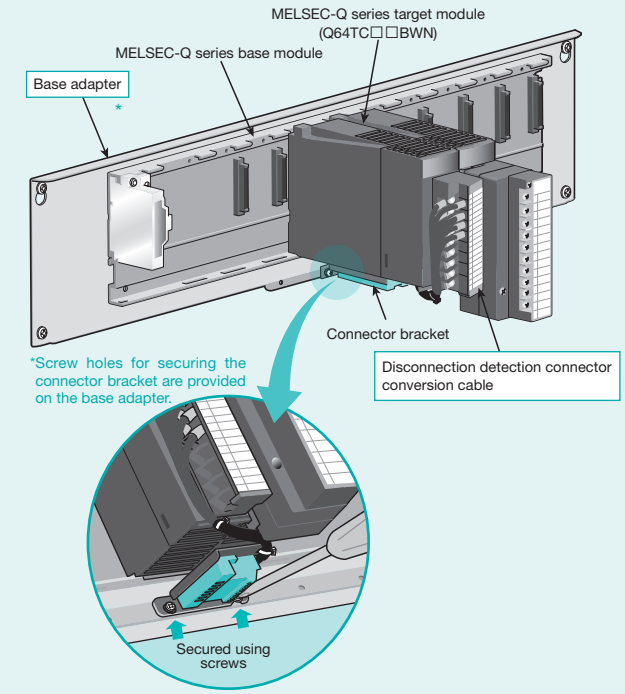

DIN rail installation

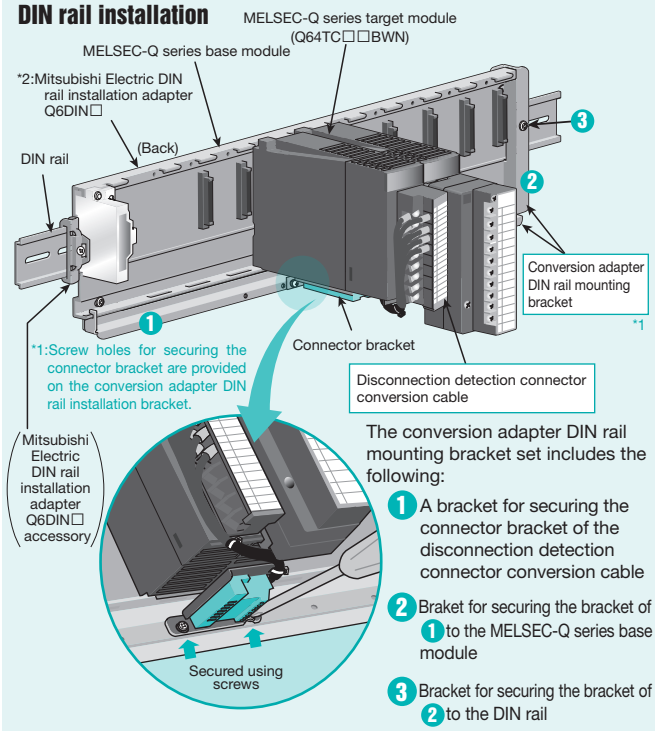

The conversion adapter DIN rail mounting bracket set includes the following:

1. A bracket for securing the connector bracket of the disconnection detection connector conversion cable
2. Braket for securing the bracket of 1 to the MELSEC-Q series base module
3. Bracket for securing the bracket of 2 to the DIN rail

*2:The Mitsubishi Electric DIN rail installation adapter Q6DIN☐ is required separately.

Model List

1 Conversion Adapter

When selecting a conversion adapter, be sure to refer to the module specification comparison charts and notes on pages 3-8 to 3-46. These pages indicate precautions such as differences in the number of points per common. For detailed specifications and general specifications not stated in the module specification comparison charts, refer to the user's manual of the corresponding module. Note that the areas where the specifications differ between the MELSEC-AnS series and the MELSEC-Q series are restricted in terms of specifications during replacement. Verify the specifications of the connected devices.

For Input/Output Modules

[1-slot type]

√ : Applicable to MELSEC-Q series large type base unit (MELSEC-AnS size)

Input / Output	MELSEC-AnS series module model before replacement	MELSEC-Q series module model after replacement	Applicability of Q series large -type base unit	Conversion adapter					Page
				Model	Shape			No. of input/ output points	
					MELSEC-AnS series	MELSEC-Q series	Support flange		
Input	A1SX10	QX10	√	ERNT-ASQTXY10	Terminal block (20 points)	Terminal block (18 points)	Without	16 points	3-8
	A1SX10EU								
Output	A1SY10	QY10	√						
	A1SY10EU								
Input	A1SX40	QX40, QX70	√	ERNT-ASQTX40			Without		3-9
	A1SX40-S2	QX40	√						
	A1SX40-S1	QX40-S1	√						
	A1SX80	QX80	√	ERNT-ASQTX80			Without		
	A1SX80-S1								
	A1SX80-S2								
Output	A1SY22	QY22	√	ERNT-ASQTY22			Without		3-10
	A1SY40	QY40P	√	ERNT-ASQTY40			Without		
	A1SY40P								
	A1SY50	QY50	√	ERNT-ASQTY50			Without		3-11
	A1SY80	QY80	√	ERNT-ASQTY80			Without		

[2-slot type]

×: Not applicable to MELSEC-Q series large type base unit (MELSEC-AnS size)

Input / Output	MELSEC-AnS series module model before replacement	MELSEC-Q series module model after replacement	Applicability of Q series large -type base unit	Conversion adapter					Page
				Model	Shape			No. of input/ output points	
					MELSEC-AnS series	MELSEC-Q series	Support flange		
Input	A1SX20	QX28 × 2 modules	×	ERNT-ASQTX20	Terminal block (20 points)	Terminal block (18 points) × 2	Without	16 points	3-12
	A1SX20EU								
Output	A1SY60	QY68A × 2 modules	×	ERNT-ASQTY60			Without		3-13
	A1SY60E	QY68A × 2 modules	×	ERNT-ASQTY60E			Without		3-14

Note 1. The input/output in the table below are not conversion adapter compatible and therefore require rewiring. Be sure to verify that the MELSEC-Q series module specifications satisfy the specifications of connected devices and equipment.

Input/Output	MELSEC-AnS series module model before replacement		MELSEC-Q series module model after replacement			Universal conversion adapter
	Model	No. of points	Model	No. of points	No. of required modules	
Output	A1SY14EU	12 points	QY10	16 points	1 module	(*1)
	A1SY18A (EU)	8 points	QY18A	8 points	1 module	
	A1SY68A	8 points	QY68A	8 points	1 module	
Combined input/output	A1SX48Y58	8 input points and 8 output points	QX48Y57	8 input points and 7 output points	1 module	
Input	A1SX30	16 points	QX40 (24VDC positive common)	16 points	1 module	
Combined input/output	A1SX48Y18	8 input points and 8 output points	QX40 + QY10	16 points and 16 points	1 module and 1 module	
Output	A1SY28A	8 points	There is no applicable MELSEC-Q series module.			–
	A1SY28EU					
Dynamic input	A1S42X	16/32/48/64 points				
Dynamic output	A1S42Y	16/32/48/64 points				

*1: The universal conversion adapter (see 7-6) can be used for replacement.

Note 2. The input/output modules in the table below can use the existing wiring as is. Be sure to verify that the MELSEC-Q series module specifications satisfy the specifications of connected devices and equipment.

Input/ Output	MELSEC-AnS series module model before replacement	MELSEC-Q series module model after replacement
Input	A1SX41	QX41 (24VDC)
		QX41-S2 (24VDC)
		QX71 (12VDC)
	A1SX41-S1	QX41-S1
	A1SX41-S2	QX41
		QX41-S2
	A1SX71	QX71 (5VDC/24VDC)
		QX41-S1 (24VDC (positive common))
	A1SX81	QX81 (24VDC negative common)
		QX81-S2 (24VDC (negative common))
	A1SX81-S2	QX81 (negative common)
		QX81-S2 (negative common)
	A1SX42	QX42 (24VDC)
		QX41-S2 (2 modules are required) (24VDC)
		QX72 (12VDC)

Input/ Output	MELSEC-AnS series module model before replacement	MELSEC-Q series module model after replacement
Input	A1SX42-S2	QX42
		QX41-S2 (2 modules are required)
	A1SX42-S1	QX42-S1
	A1SX82-S1	QX82-S1 (negative common)
Output	A1SY41	QY41P
	A1SY41P	
	A1SY81	QY81P
	A1SY81EP	
	A1SY71	QY71
	A1SY42	QY42P
	A1SY42P	
	A1SY82	QY82P
Combined input/output	A1SH42	QH42P (24VDC input)
	A1SH42P	
	A1SH42-S1	QH42P
	A1SH42P-S1	

For Analog Modules [1-slot type]

√ : Applicable to MELSEC-Q series large type base unit (MELSEC-AnS size)
×: Not applicable to MELSEC-Q series large type base unit (MELSEC-AnS size)

Input/ Output	MELSEC-AnS series module model before replacement	MELSEC-Q series module model after replacement	Applicability of Q series large type base unit	Conversion adapter Model	Shape: MELSEC-AnS series	Shape: MELSEC-Q series	Support flange	No. of channels	Page
Input	A1S64AD	Q64AD	√	**ERNT-ASQT64AD**	Terminal block (20 points)	Terminal block (18 points)	Without	4 channels	3-15
	A1S68AD (Voltage input)	Q68ADV	√	**ERNT-ASQT68AD**			Without	8 channels	3-16
	A1S68AD (Current input)	Q68ADI	√						
	A1S68AD	Q68AD-G	× (*2)	**ERNT-ASQT68AD-G**		Connector (40P)	With		3-17
Output	A1S62DA	Q62DAN	√	**ERNT-ASQT62DA**		Terminal block (18 points)	Without	2 channels	3-18
	A1S68DAV	Q68DAVN	√	**ERNT-ASQT68DA**			Without	8 channels	3-19
	A1S68DAI	Q68DAIN	√						
Input/ Output	A1S63ADA	Q64AD2DA	× (*2)	**ERNT-ASQT63ADA**			Without	3 channels	3-20

*2: Reason: The MELSEC-Q series large type blank cover QG69LS (MELSEC-AnS series size) cannot be mounted on the MELSEC-Q series module.

For High-Speed Counter Modules [1-slot type]

√ : Applicable to MELSEC-Q series large type base unit (MELSEC-AnS size)

Input/ Output	MELSEC-AnS series module model before replacement	MELSEC-Q series module model after replacement	Applicability of Q series large type base unit	Conversion adapter Model	Shape: MELSEC-AnS series	Shape: MELSEC-Q series	Support flange	No. of channels	Page
Input	A1SD61	QD62	√	**ERNT-ASQTD61**	Terminal block (20 points)	Connector (40P)	With	1 channel	3-21
		QD62-H01	√						
		QD62-H02	√						
	A1SD62	QD62	√	**ERNT-ASQTD62**			With	2 channels	3-25
	A1SD62E	QD62E	√						
	A1SD62D	QD62D	√	**ERNT-ASQTD62D**			With		3-28

For Temperature Input Modules [1-slot type]

√ : Applicable to MELSEC-Q series large type base unit (MELSEC-AnS size)
×: Not applicable to MELSEC-Q series large type base unit (MELSEC-AnS size)

Input/ Output	MELSEC-AnS series module model before replacement	MELSEC-Q series module model after replacement	Applicability of Q series large type base unit	Conversion adapter Model	Shape: MELSEC-AnS series	Shape: MELSEC-Q series	Support flange	No. of channels	Page
Input	A1S68TD	Q68TD-G-H01	√	**ERNT-ASQT68TD-H01**	Terminal block (20 points)	Connector (40P)	With	8 channels	3-30
		Q68TD-G-H02	× (*3)	**ERNT-ASQT68TD-H02**			With		
	A1S62RD3 (N)	Q64RD	√	**ERNT-ASQT62RD**		Terminal block (18 points)	Without	2 channels	3-32
	A1S62RD4 (N)								

*3: Reason: The MELSEC-Q series large type blank cover QG69LS (MELSEC-AnS series size) cannot be mounted on the MELSEC-Q series module.

For Temperature Control Modules [1-slot type]

√ : Applicable to MELSEC-Q series large type base unit (MELSEC-AnS size)

MELSEC-AnS series module model before replacement	MELSEC-Q series module model after replacement	Applicability of Q series large type base unit	Conversion adapter Model	Shape: MELSEC-AnS series	Shape: MELSEC-Q series	Support flange	No. of channels	Page
A1S64TCTT-S1 / **A1S64TCTRT** (*4)	Q64TCTTN	√	**ERNT-ASQT64TCTT**	Terminal block (20 points)	Terminal block (18 points)	Without	4 channels	3-33
A1S64TCRT-S1 / **A1S64TCTRT** (*5)	Q64TCRTN	√	**ERNT-ASQT64TCRT**			Without	4 channels	3-35
A1S62TCTT-S2 / **A1S64TCTRT** (*6)	Q64TCTTN	√	**ERNT-ASQT62TCTT**			Without	2 channels	3-36
A1S62TCRT-S2 / **A1S64TCTRT** (*7)	Q64TCRTN	√	**ERNT-ASQT62TCRT**			Without	2 channels	3-38

*4: For thermocouple input under standard control
*5: For platinum RTD input under standard control
*6: For thermocouple input under heating and cooling control
*7: For platinum RTD input under heating and cooling control

Temperature Control Modules with Disconnection Detection Function [1-slot type + Disconnection detection connector conversion cable]

The conversion adapter for the temperature control module (1-slot type) with the disconnection detection connector conversion cable. Use the set model name to order.

×: Not applicable to MELSEC-Q series large type base unit (MELSEC-AnS size)

MELSEC-AnS series module model before replacement	MELSEC-Q series module model after replacement	Applicability of Q series large type base unit	Set model	Temperature control module conversion adapter Model	Shape: MELSEC-AnS series	Shape: MELSEC-Q series	Support flange	No. of channels	Disconnection detection connector conversion cable Shape: MELSEC-AnS series	Shape: MELSEC-Q series	Page
A1S64TCTTBW-S1 / **A1S64TCTRTBW** (*8)	Q64TCTTBWN	× (*12)	**ERNT-ASQT64TCTTBW**	ERNT-ASQT64TCTT	Terminal block (20 points)	Terminal block (18 points)	Without	4 channels	Connector (8P)	Terminal block (18 points)	3-39
A1S64TCRTBW-S1 / **A1S64TCTRTBW** (*9)	Q64TCRTBWN	× (*12)	**ERNT-ASQT64TCRTBW**	ERNT-ASQT64TCRT			Without	4 channels			3-41
A1S62TCTTBW-S2 / **A1S64TCTRTBW** (*10)	Q64TCTTBWN	× (*12)	**ERNT-ASQT62TCTTBW**	ERNT-ASQT62TCTT			Without	2 channels			3-42
A1S62TCRTBW-S2 / **A1S64TCTRTBW** (*11)	Q64TCRTBWN	× (*12)	**ERNT-ASQT62TCRTBW**	ERNT-ASQT62TCRT			Without	2 channels			3-46

*8: For thermocouple input under standard control
*9: For platinum RTD input under standard control
*10: For thermocouple input under heating and cooling control
*11: For platinum RTD input under heating and cooling control
*12: For 2-slot type MELSEC-Q series modules

Notes
3. Intelligent function modules other than the above (positioning modules, information system modules, distribution modules, etc.) are not conversion adapter compatible and therefore require rewiring.

2 Base Adapter

With the base adapter, the MELSEC-Q series base unit can be installed using the mounting holes of the MELSEC-AnS series base unit.

Main/ Extension	MELSEC-AnS series module model before replacement	MELSEC-Q series module model after replacement	Base adapter model	Remark	Page
Main	A1S38B/A1S38HB	Q38B	**ERNT-ASQB38N**	When using Q7BAT-SET, mount Q7BAT-SET to the CPU module with the CPU module (prior to Q7BAT-SET mounting) mounted to the base adapter installed.	**3-47 to 3-48**
	A1S35B	Q35B	**ERNT-ASQB35N**		
	A1S33B	Q33B	**ERNT-ASQB33N**		
	A1S32B	Q33B	**ERNT-ASQB32N**		
	A1SJCPU	Q00JCPU Q00UJCPU	**ERNT-ASQB00JN**		
	A1SJCPU-S3				
	A1SJHCPU				
Extension	A1S68B	Q68B	**ERNT-ASQB68N**		
	A1S65B	Q65B	**ERNT-ASQB65N**		
	A1S58B	Q68B (*13)	**ERNT-ASQB58N**		
	A1S55B	Q55B	**ERNT-ASQB55N**		
	A1S52B	Q52B	**ERNT-ASQB52N**		

*13: Replaced with base unit when power supply module mounting is required.

With the following model base adapters, the main base unit and the QA extension base unit QA1S51B can be both installed.

MELSEC-AnS series module model before replacement	MELSEC-Q series module model after replacement		Base adapter model	Remark	Page
	Main	Extension			
A1S38B/A1S38HB/A1S38HBEU	Q38B/Q35B/Q33B	QA1S51B	**ERNT-ASQB38N-S1**	When using Q7BAT-SET, mount Q7BAT-SET to the CPU module with the CPU module (prior to Q7BAT-SET mounting) mounted to the base adapter installed.	**3-47 to 3-48**
A1S35B	Q35B/Q33B		**ERNT-ASQB35N-S1**		
A1S33B	Q33B		**ERNT-ASQB33N-S1**		

3 Conversion Adapter DIN Rail Mounting Bracket

When mounting the MELSEC-Q series base unit to a DIN rail and using a conversion adapter with a support flange, or a disconnection detection connector conversion cable for the temperature control module the conversion adapter DIN rail mounting bracket is required. If a conversion adapter with a support flange or a disconnection detection connector conversion cable for the temperature control module is not used, this mounting bracket is not required.

Main/ Extension	MELSEC-AnS series module model before replacement	MELSEC-Q series module model after replacement	Conversion adapter DIN rail mounting bracket model	Remark	Page
Main	A1S38B/A1S38HB/A1S38HBEU	Q38B	**ERNT-ASQDIN3868**	•A DIN adapter manufactured by Mitsubishi Electric is separately required. •When using Q7BAT-SET, mount Q7BAT-SET to the CPU module with the CPU module (prior to Q7BAT-SET mounting) mounted to the base adapter installed.	**3-49**
Extension	A1S68B	Q68B			
	A1S58B				
Main	A1S35B	Q35B	**ERNT-ASQDIN356500J**		
Extension	A1S65B	Q65B			
Main	A1SJCPU	Q00JCPU Q00UJCPU			
	A1SJCPU-S3				
	A1SJHCPU				
	A1S33B	Q33B	**ERNT-ASQDIN3355**		
	A1S32B				
Extension	A1S55B	Q55B			
	A1S52B	Q52B	**ERNT-ASQDIN52**		

Conversion Adapter

Specifications

For Input/Output Modules

1-slot type

1) ERNT-ASQTXY10 Terminal block (20P)→Terminal block (18P)

Conversion adapter model	MELSEC-AnS series module model	No. of input/ output points	MELSEC-Q series module model
ERNT-ASQTXY10	A1SX10	16 points	QX10
	A1SX10EU		
	A1SY10	16 points	QY10
	A1SY10EU		

With A1SX10/A1SX10EU→QX10

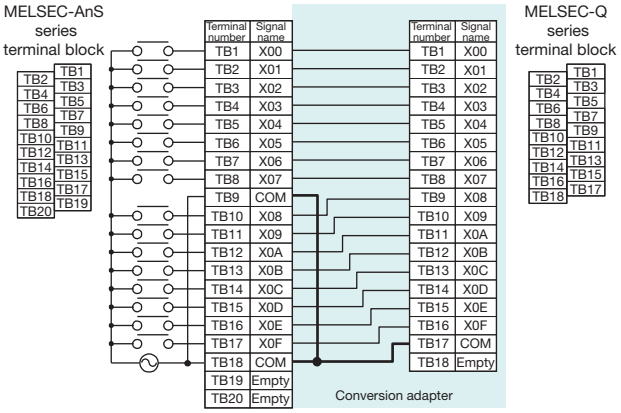

[Specification comparison chart]

Specification \ Model	MELSEC-AnS series		MELSEC-Q series
	A1SX10	A1SX10EU	QX10
No. of input points	16 points	16 points	16 points
Isolation method	Photocoupler isolation	Photocoupler isolation	Photocoupler isolation
Rated input voltage	100 to 120VAC, 50/60Hz	100 to 120VAC, 50/60Hz	100 to 120VAC (+10/-15%) 50/60Hz (±3Hz)
Rated input current	Approx. 6mA (100VAC, 60Hz)	Approx. 7mA (120VAC, 60Hz)	Approx. 8mA (100VAC, 60Hz) Approx. 7mA (100V,AC 50Hz)
Rush current	200mA, maximum, within 1ms (132VAC)	200mA, maximum, within 1ms (132VAC)	200mA, maximum, within 1ms (132VAC)
ON voltage / ON current	80VAC or more / 5mA or more	80VAC or more / 5mA or more	80VAC or more / 5mA or more
OFF voltage / OFF current	30VAC or less / 1.4mA or less	30VAC or less / 1.4mA or less	30VAC or less / 1.7mA or less
Input impedance	Approx. 18kΩ (60Hz) Approx. 21kΩ (50Hz)	Approx. 18kΩ (60Hz) Approx. 21kΩ (50Hz)	Approx. 12kΩ (60Hz) Approx. 15kΩ (50Hz)
Response time OFF→ON	20ms or less	20ms or less	15ms or less
Response time ON→OFF	35ms or less	35ms or less	20ms or less
Internal current consumption	50mA (TYP. all points ON)	50mA (TYP. all points ON)	50mA (TYP. all points ON)
Wiring method for common	16 points/common	16 points/common	16 points/common
External interface	20-point terminal block	20-point terminal block	18-point terminal block

Notes
1. For areas, verify that the MELSEC-Q series module specifications satisfy the specifications of the connected device/equipment.
2. For detailed and general specifications not described in the module specification comparison chart, refer to the user's manual of the module used. Note that the areas where the specifications differ between the MELSEC-AnS series and the MELSEC-Q series are restricted in terms of specifications during replacement. Verify the specifications of the connected devices.

With A1SY10/A1SY10EU→QY10

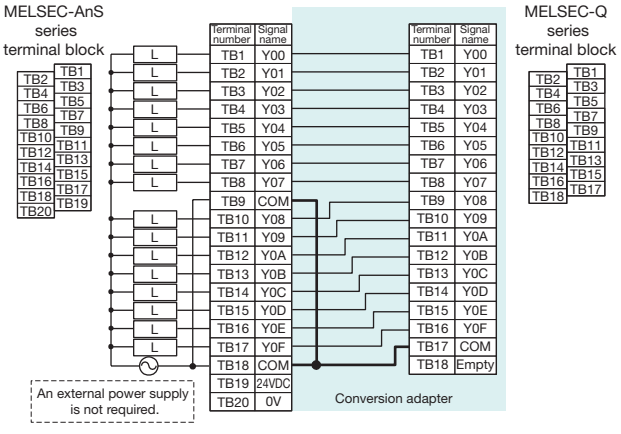

[Specification comparison chart]

Specification \ Model	MELSEC-AnS series		MELSEC-Q series
	A1SY10	A1SY10EU	QY10
No. of output points	16 points	16 points	16 points
Isolation method	Photocoupler isolation	Photocoupler isolation	Relay isolation
Rated switching voltage/current	240VAC/2A (COSΦ=1) 24VDC/2A (Resistance load) (8A/common)	120VAC/2A (cosΦ=1) 24VDC/2A (Resistance load) (8A/common)	240VAC/2A (cosΦ=1) 24VDC/2A (Resistance load) (8A/common)
Minimum switching load	5VDC, 1mA	5VDC, 1mA	5VDC, 1mA
Maximum switching voltage	264VAC, 125VDC	132VAC, 125VDC	264VAC, 125VDC
Response time OFF→ON	10ms or less	10ms or less	10ms or less
Response time ON→OFF	12ms or less	12ms or less	12ms or less
Surge suppressor	No	No	No
Fuse	No	No	No
Internal current consumption	120mA (TYP. all points ON)	120mA (TYP. all points ON)	430mA (TYP. all points ON)
Wiring method for common	8 points/common	8 points/common	16 points/common
External interface	20-point terminal block	20-point terminal block	18-point terminal block

Notes
1. When the number of points per common changes from eight (two circuits) to 16 and the terminal numbers TB9 and TB18 on the MELSEC-AnS series side are used separately, a wiring change is required.
2. An external power supply connected to terminal numbers TB19 and TB20 on the MELSEC-AnS series side is not required.
3. For areas, verify that the MELSEC-Q series module specifications satisfy the specifications of the connected device/equipment.
4. For detailed and general specifications not described in the specification comparison chart, refer to the user's manual of the module used. Note that the areas where the specifications differ between the MELSEC-AnS series and the MELSEC-Q series are restricted in terms of specifications during replacement. Verify the specifications of the connected devices.

2) ERNT-ASQTX40 Terminal block (20P)→Terminal block (18P)

Conversion adapter model	MELSEC-AnS series module model	No. of input points	MELSEC-Q series module mode
ERNT-ASQTX40	A1SX40	16 points	QX40 QX70
	A1SX40-S2	16 points	QX40
	A1SX40-S1	16 points	QX40-S1

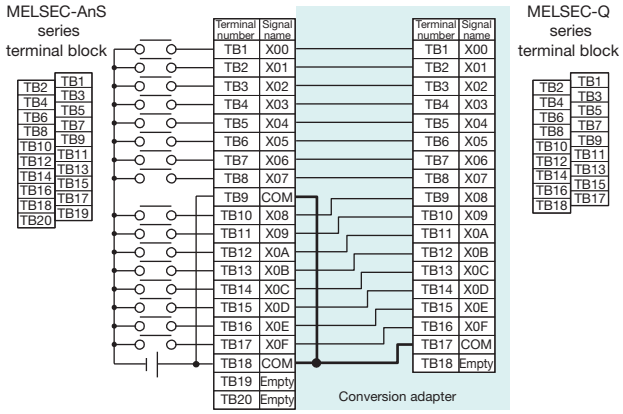

[Specification comparison chart]

Specification \ Model	MELSEC-AnS series A1SX40 (Sink type)	MELSEC-Q series QX40 (Positive common type)	MELSEC-Q series QX70 (Positive/Negative common shared type)	
No. of input points	16 points	16 points	16 points	
Isolation method	Photocoupler isolation	Photocoupler isolation	Photocoupler isolation	
Rated input voltage	12/24VDC	24VDC (+20/-15%, within a ripple rate of 5%)	5VDC	12VDC
Rated input current	Approx. 3mA/Approx. 7mA	Approx. 4mA	Approx. 1.2mA	Approx. 3.3mA
ON voltage / ON current	8VDC or more / 2mA or more	19VDC or more / 3mA or more	3.5V or more / 1mA or more	
OFF voltage / OFF current	4VDC or less / 1mA or less	11VDC or less / 1.7mA or less	1V or less / 0.1mA or less	
Input impedance	Approx. 3.3kΩ	Approx. 5.6kΩ	Approx. 3.3kΩ	
Response time OFF→ON	10ms or less	1/5/10/20/70ms or less	1/5/10/20/70ms or less	
Response time ON→OFF	10ms or less	1/5/10/20/70ms or less	1/5/10/20/70ms or less	
Internal current consumption	50mA (TYP. all points ON)	50mA (TYP. all points ON)	55mA (TYP. all points ON)	
Wiring method for common	16 points/common	16 points/common	16 points/common	
External interface	20-point terminal block	18-point terminal block	18-point terminal block	

Specification \ Model	MELSEC-AnS series A1SX40-S1 (Sink type)	MELSEC-Q series QX40-S1 (Positive common type)
No. of input points	16 points	16 points
Isolation method	Photocoupler isolation	Photocoupler isolation
Rated input voltage	24VDC	24VDC (+20/-15%, within a ripple rate of 5%)
Rated input current	Approx. 7mA	Approx. 6mA
ON voltage / ON current	14VDC or more / 4mA or more	19VDC or more / 4mA or more
OFF voltage / OFF current	6.5VDC or less / 1.7mA or less	11VDC or less / 1.7mA or less
Input impedance	Approx. 3.3kΩ	Approx. 3.9kΩ
Response time OFF→ON	0.1ms or less	0.1/0.2/0.4/0.6/1ms
Response time ON→OFF	0.2ms or less	0.1/0.2/0.4/0.6/1ms
Internal current consumption	50mA (TYP. all points ON)	60mA (TYP. all points ON)
Wiring method for common	16 points/common	16 points/common
External interface	20-point terminal block	18-point terminal block

Specification \ Model	MELSEC-AnS series A1SX40-S2 (Sink type)	MELSEC-Q series QX40 (Positive common type)
No. of input points	16 points	16 points
Isolation method	Photocoupler isolation	Photocoupler isolation
Rated input voltage	24VDC	24VDC (+20/-15%, within a ripple rate of 5%)
Rated input current	Approx. 7mA	Approx. 4mA
ON voltage / ON current	14VDC or more / 3.5mA or more	19VDC or more / 3mA or more
OFF voltage / OFF current	6.5VDC or less / 1.7mA or less	11VDC or less / 1.7mA or less
Input impedance	Approx. 3.3kΩ	Approx. 5.6kΩ
Response time OFF→ON	10ms or less	1/5/10/20/70ms or less
Response time ON→OFF	10ms or less	1/5/10/20/70ms or less
Internal current consumption	50mA (TYP. all points ON)	50mA (TYP. all points ON)
Wiring method for common	16 points/common	16 points/common
External interface	20-point terminal block	18-point terminal block

Notes
1. When replacing A1SX40 with QX40 and using rated input voltage of 12VDC, the voltage needs to be changed to 24VDC.
2. When replacing A1SX40 with QX70 and using rated input voltage of 24VDC, the voltage needs to be changed to 12VDC.
3. For areas, verify that the MELSEC-Q series module specifications satisfy the specifications of the connected device/equipment.
4. For detailed and general specifications not described in the specification comparison chart, refer to the user's manual of the module used. Note that the areas where the specifications differ between the MELSEC-AnS series and the MELSEC-Q series are restricted in terms of specifications during replacement. Verify the specifications of the connected devices.

3) ERNT-ASQTX80 Terminal block (20P)→Terminal block (18P)

Conversion adapter model	MELSEC-AnS series module model	No. of input points	MELSEC-Q series module model
ERNT-ASQTX80	A1SX80	16 points	QX80
	A1SX80-S1		
	A1SX80-S2		

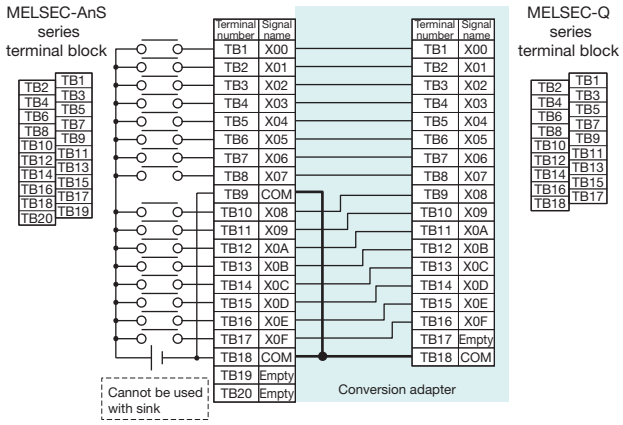

[Specification comparison chart]

Specification \ Model	MELSEC-AnS series A1SX80 (Sink/Source type)	A1SX80-S1 (Sink/Source type)	A1SX80-S2 (Sink/Source type)	MELSEC-Q series QX80 (Negative common type)
No. of input points	16 points	16 points	16 points	16 points
Isolation method	Photocoupler isolation	Photocoupler isolation	Photocoupler isolation	Photocoupler isolation
Rated input voltage	12/24VDC	24VDC	24VDC	24VDC (+20/-15%, within a ripple rate of 5%)
Rated input current	Approx. 3mA /Approx. 7mA	Approx. 7mA	Approx. 7mA	Approx. 4mA
ON voltage / ON current	8VDC or more / 2mA or more	17VDC or more / 5mA or more	13VDC or more / 3.5mA or more	19VDC or more / 3mA or more
OFF voltage / OFF current	4VDC or less / 1mA or less	5VDC or less / 1.7mA or less	6VDC or less / 1.7mA or less	11VDC or less / 1.7mA or less
Input impedance	Approx. 3.3kΩ	Approx. 3.3kΩ	Approx. 3.3kΩ	Approx. 5.6kΩ
Response time OFF→ON	10ms or less	0.4ms or less	10ms or less	1/5/10/20/70ms or less
Response time ON→OFF	10ms or less	0.5ms or less	10ms or less	1/5/10/20/70ms or less
Internal current consumption	50mA (TYP. all points ON)	50mA (TYP. all points ON)	50mA (TYP. all points ON)	50mA (TYP. all points ON)
Wiring method for common	16 points/common	16 points/common	16 points/common	16 points/common
External interface	20-point terminal block	20-point terminal block	20-point terminal block	18-point terminal block

Notes
1. Use with source input. (Use with sink input is not permitted.)
2. When replacing A1SX80 with QX80 and using rated input voltage of 12VDC, the voltage needs to be changed to 24VDC.
3. For areas, verify that the MELSEC-Q series module specifications satisfy the specifications of the connected device/equipment.
4. For detailed and general specifications not described in the specification comparison chart, refer to the user's manual of the module used. Note that the areas where the specifications differ between the MELSEC-AnS series and the MELSEC-Q series are restricted in terms of specifications during replacement. Verify the specifications of the connected devices.

4) ERNT-ASQTY22 Terminal block (20P)→Terminal block (18P)

Conversion adapter model	MELSEC-AnS series module model	No. of output points	MELSEC-Q series module model
ERNT-ASQTY22	A1SY22	16 points	QY22

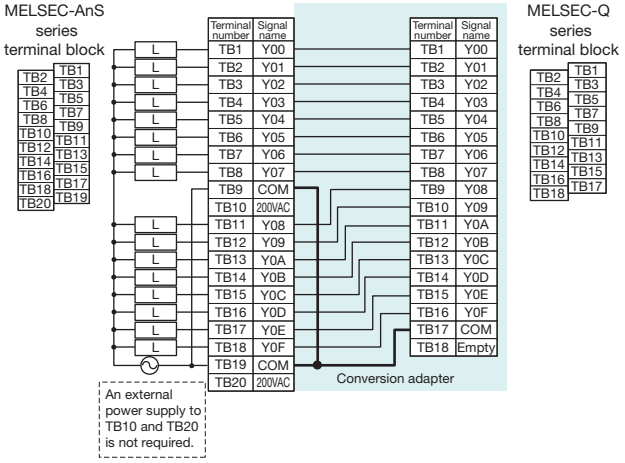

[Specification comparison chart]

Specification \ Model		MELSEC-AnS series	MELSEC-Q series
		A1SY22	QY22
No. of output points		16 points	16 points
Isolation method		Photocoupler isolation	Photocoupler isolation
Rated load voltage		100/240VAC	100 to 240VAC (+10/-15%)
Maximum load current		0.6A/point 2.4A/common	0.6A/point 4.8A/common
Minimum load voltage/current		24VAC 100mA 100VAC 10mA 240VAC 20mA	24VAC 100mA 100VAC 25mA 240VAC 25mA
Maximum rush current		20A 10ms or less, 8A 100ms or less	20A, one cycle or less
OFF leakage current		1.5mA (120VAC, 60Hz) 3mA (240VAC, 60Hz)	1.5mA (at 120VAC, 60Hz) 3mA or less (at 240VAC, 60Hz)
ON maximum voltage drop		1.5VAC or less (0.1 to 0.6A) 1.8VAC or less (50 to 100mA) 2VAC or less (10 to 50mA)	1.5V or less
Response time	OFF→ON	1ms or less	1ms or less
	ON→OFF	0.5Hz + 1ms or less	1ms + 0.5 cycles or less
Surge suppressor		CR absorber	CR absorber
Fuse		5A (1 common/fuse) not replaceable	No (Fuse installation recommended with external wiring)
Internal current consumption		270mA (TYP. all points ON)	250mA (TYP. all points ON)
Wiring method for common		8 points/common	16 points/common
External interface		20-point terminal block	18-point terminal block

Notes
1. When the number of points per common changes from eight (two circuits) to 16 and the terminal numbers TB9 and TB19 on the MELSEC-AnS series side are used separately, a wiring change is required.
2. An external power supply connected to terminal numbers TB10 and TB20 on the MELSEC-AnS series side is not required.
3. For ▭ areas, verify that the MELSEC-Q series module specifications satisfy the specifications of the connected device/equipment.
4. For detailed and general specifications not described in the specification comparison chart, refer to the user's manual of the module used. Note that the areas where the specifications differ between the MELSEC-AnS series and the MELSEC-Q series are restricted in terms of specifications during replacement. Verify the specifications of the connected devices.

5) ERNT-ASQTY40 Terminal block (20P)→Terminal block (18P)

Conversion adapter model	MELSEC-AnS series module model	No. of output points	MELSEC-Q series module model
ERNT-ASQTY40	A1SY40 A1SY40P	16 points	QY40P

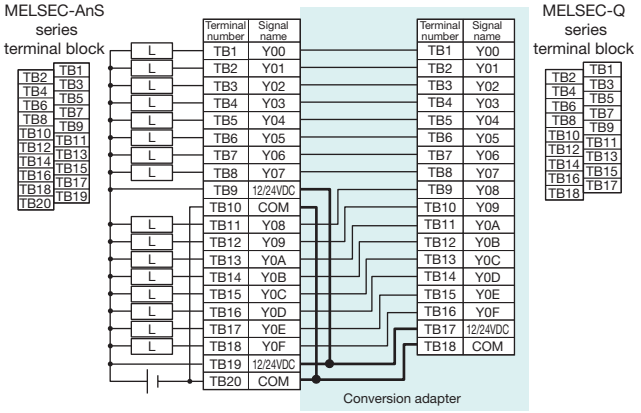

[Specification comparison chart]

Specification \ Model		MELSEC-AnS series		MELSEC-Q series
		A1SY40 (Sink type)	A1SY40P (Sink type)	QY40P (Sink type)
No. of output points		16 points	16 points	16 points
Isolation method		Photocoupler isolation	Photocoupler isolation	Photocoupler isolation
Rated load voltage		12/24VDC	12/24VDC	12 to 24VDC
Maximum load current		0.1A/point 0.8A/common	0.1A/point 0.8A/common	0.1A/point 1.6A/common
Maximum rush current		0.4A, 10ms or less	0.7A, 10ms or less	0.7A, 10ms or less
OFF leakage current		0.1mA or less	0.1mA or less	0.1mA or less
ON maximum voltage drop		1.0VDC (TYP) 0.1A 2.5VDC (MAX) 0.1A	0.1VDC (TYP) 0.1A 0.2VDC (MAX) 0.1A	0.1VDC (TYP) 0.1A 0.2VDC (MAX) 0.1A
Response time	OFF→ON	2ms or less	1ms or less	1ms or less
	ON→OFF	2ms or less (Resistance load)	1ms or less (Rated load, resistance load)	1ms or less (Rated load, resistance load)
Surge suppressor		Zener diode	Zener diode	Zener diode
Fuse		1.6 A (1 common/fuse) not replaceable	No	No
Internal current consumption		270mA (TYP. all points ON)	79mA (TYP. all points ON)	65mA (TYP. all points ON)
Protection function		No	Yes (Overheat protection function, short-circuit protection)	Yes (Overheat protection function, short-circuit protection)
Wiring method for common		8 points/common	8 points/common	16 points/common
External interface		20-point terminal block	20-point terminal block	18-point terminal block

Notes
1. When the number of points per common changes from eight (two circuits) to 16 and the terminal numbers TB9 and TB19 as well as TB10 and TB20 on the MELSEC-AnS series side are used separately, a wiring change is required.
2. For ▭ areas, verify that the MELSEC-Q series module specifications satisfy the specifications of the connected device/equipment.
3. For detailed and general specifications not described in the specification comparison chart, refer to the user's manual of the module used. Note that the areas where the specifications differ between the MELSEC-AnS series and the MELSEC-Q series are restricted in terms of specifications during replacement. Verify the specifications of the connected devices.

6) ERNT-ASQTY50 Terminal block (20P)→Terminal block (18P)

Conversion adapter model	MELSEC-AnS series module model	No. of output points	MELSEC-Q series module model
ERNT-ASQTY50	A1SY50	16 points	QY50

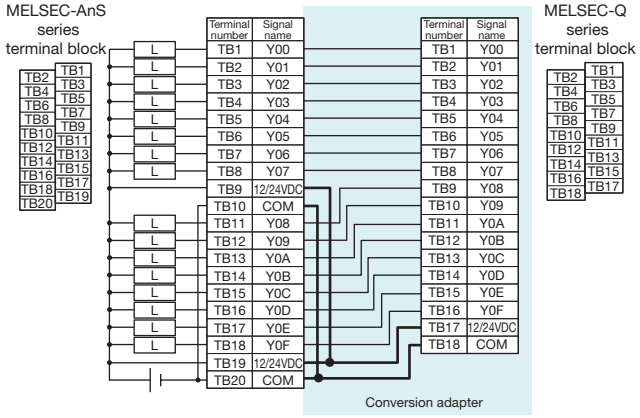

[Specification comparison chart]

Specification \ Model		MELSEC-AnS series A1SY50 (Sink type)	MELSEC-Q series QY50 (Positive common type)
No. of output points		16 points	16 points
Isolation method		Photocoupler isolation	Photocoupler isolation
Rated load voltage		12/24VDC	12 to 24VDC
Maximum load current		0.5A/point 2A/common	0.5A/point 4A/common
Maximum rush current		4A, 10ms or less	4A, 10ms or less
OFF leakage current		0.1mA or less	0.1mA or less
ON maximum voltage drop		0.9VDC (TYP) 0.5A 1.5VDC (MAX) 0.5A	0.2VDC (TYP) 0.5A 0.3VDC (MAX) 0.5A
Response time	OFF→ON	2ms or less	1ms or less
	ON→OFF	2ms or less (Resistance load)	1ms or less (Rated load, resistance load)
Surge suppressor		Zener diode	Zener diode
Fuse		Yes	6.7A (not replaceable)
Internal current consumption		120mA (TYP. all points ON)	80mA (TYP. all points ON)
Wiring method for common		8 points/common	16 points/common
External interface		20-point terminal block	18-point terminal block

Notes
1. When the number of points per common changes from eight (two circuits) to 16 and the terminal numbers TB9 and TB19 as well as TB10 and TB20 on the MELSEC-AnS series side are used separately, a wiring change is required.
2. For ▭ areas, verify that the MELSEC-Q series module specifications satisfy the specifications of the connected device/equipment.
3. For detailed and general specifications not described in the specification comparison chart, refer to the user's manual of the module used. Note that the areas where the specifications differ between the MELSEC-AnS series and the MELSEC-Q series are restricted in terms of specifications during replacement. Verify the specifications of the connected devices.

7) ERNT-ASQTY80 Terminal block (20P)→Terminal block (18P)

Conversion adapter model	MELSEC-AnS series module model	No. of output points	MELSEC-Q series module model
ERNT-ASQTY80	A1SY80	16 points	QY80

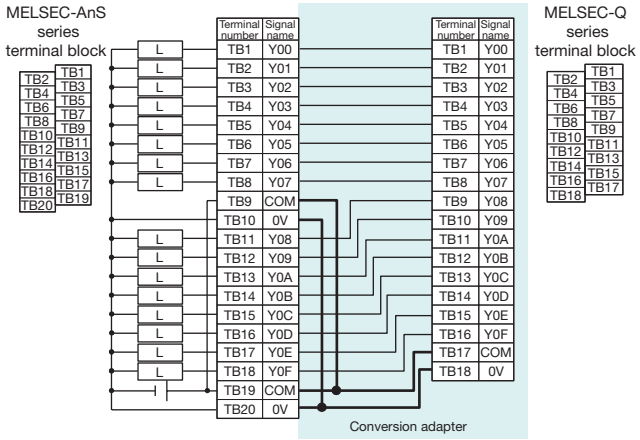

[Specification comparison chart]

Specification \ Model		MELSEC-AnS series A1SY80 (Source type)	MELSEC-Q series QY80 (Source type)
No. of output points		16 points	16 points
Isolation method		Photocoupler isolation	Photocoupler isolation
Rated load voltage		12/24VDC	12 to 24VDC
Maximum load current		0.8A/point 3.2A/common	0.5A/point 4A/common
Maximum rush current		8A, 10ms or less	4A, 10ms or less
OFF leakage current		0.1mA or less	0.1mA or less
ON maximum voltage drop		1.5VDC (MAX) 0. 8A	0.2VDC (TYP) 0.5 A 0.3VDC (MAX) 0.5 A
Response time	OFF→ON	2ms or less	1ms or less
	ON→OFF	2ms or less (Resistance load)	1ms or less (Rated load, resistance load)
Surge suppressor		Zener diode	Zener diode
Fuse		5A (1 common/fuse) not replaceable	6.7A (not replaceable)
Internal current consumption		120mA (TYP. all points ON)	80mA (TYP. all points ON)
Wiring method for common		8 points/common	16 points/common
External interface		20-point terminal block	18-point terminal block

Notes
1. When the number of points per common changes from eight (two circuits) to 16 and the terminal numbers TB9 and TB19 as well as TB10 and TB20 on the MELSEC-AnS series side are used separately, a wiring change is required.
2. For ▭ areas, verify that the MELSEC-Q series module specifications satisfy the specifications of the connected device/equipment.
3. For detailed and general specifications not described in the specification comparison chart, refer to the user's manual of the module used. Note that the areas where the specifications differ between the MELSEC-AnS series and the MELSEC-Q series are restricted in terms of specifications during replacement. Verify the specifications of the connected devices.

2-slot type

1) ERNT-ASQTX20 Terminal block (20P)→Terminal block (18P) × 2

Conversion adapter model	MELSEC-AnS series module model	No. of input points	MELSEC-Q series module model	No. of required modules
ERNT-ASQTX20	A1SX20 A1SX20EU	16 points	QX28	2 modules

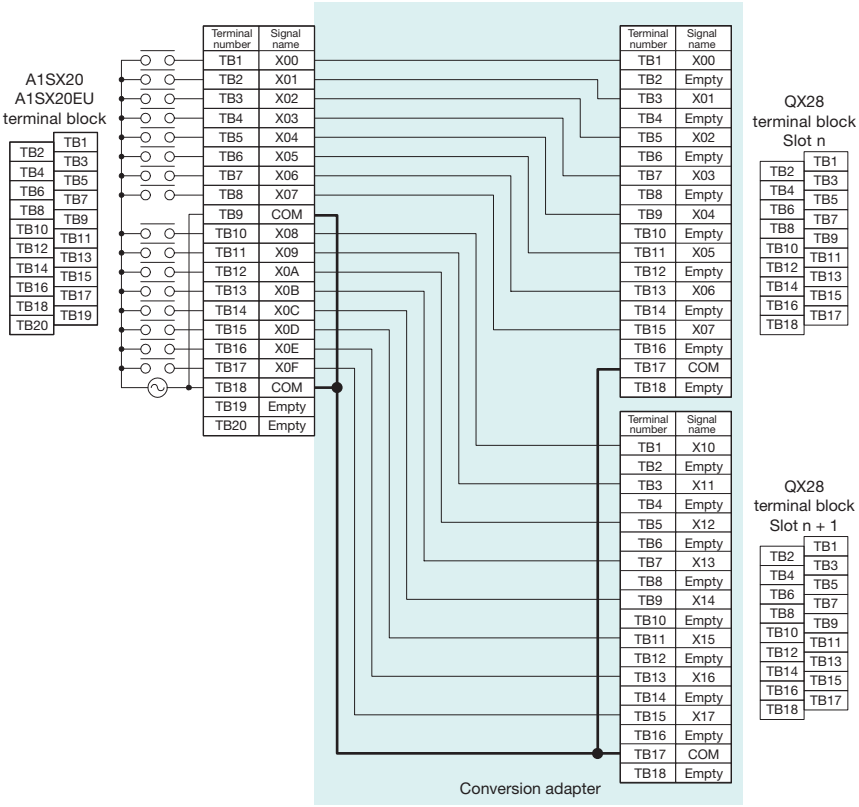

[Specification comparison chart]

Specification \ Model	MELSEC-AnS series		MELSEC-Q series
	A1SX20	A1SX20EU	QX28
No. of input points	16 points	16 points	8 points
Isolation method	Photocoupler isolation	Photocoupler isolation	Photocoupler isolation
Rated input voltage	200 to 240VAC, 50/60Hz	200 to 240VAC, 50/60Hz	100 to 240VAC (+10%/-15%), 50/60Hz (±3Hz)
Rated input current	Approx. 9 mA (200VAC, 60Hz)	Approx. 11mA (240VAC, 60Hz)	Approx. 17mA (200VAC, 60Hz), Approx. 14mA (200VAC, 50Hz) Approx. 8 mA (100VAC, 60Hz), Approx. 7mA (100VAC, 50Hz)
Rush current	500mA, maximum, within 1ms (264VAC)	500mA, maximum, within 1ms (264VAC)	500mA, maximum, within 1ms (264VAC)
ON voltage / ON current	80VAC or more / 4mA or more	80VAC or more / 4mA or more	80VAC or more / 5mA or more (50Hz, 60Hz)
OFF voltage / OFF current	30VAC or less / 1mA or less	30VAC or less / 1mA or less	30VAC or less / 1.7mA or less (50Hz, 60Hz)
Input impedance	Approx. 22kΩ (60Hz), Approx. 27kΩ (50Hz)	Approx. 22kΩ (60Hz), Approx. 27kΩ (50Hz)	Approx. 12kΩ (60Hz), Approx. 15kΩ (50Hz)
Response time OFF→ON	30ms or less (200VAC, 60Hz)	30ms or less (200VAC, 60Hz)	10ms or less (100VAC 50Hz, 60Hz)
Response time ON→OFF	55ms or less (200VAC, 60Hz)	55ms or less (200VAC, 60Hz)	20ms or less (100VAC 50Hz, 60Hz)
Internal current consumption	50mA (TYP. all points ON)	50mA (TYP. all points ON)	50mA (TYP. all points ON)
Wiring method for common	16 points/common	16 points/common	8 points/common
External interface	20-point terminal block	20-point terminal block	18-point terminal block

Notes
1. For ☐ areas, verify that the MELSEC-Q series module specifications satisfy the specifications of the connected device/equipment.
2. For detailed and general specifications not described in the specification comparison chart, refer to the user's manual of the module used. Note that the areas where the specifications differ between the MELSEC-AnS series and the MELSEC-Q series are restricted in terms of specifications during replacement. Verify the specifications of the connected devices.

●Program precautions
QX28 is a 16-point occupied module, requiring a program change of the latter 8 points X08 to X0F used in A1SX20/A1SX20EU to X10 to X17.

2) ERNT-ASQTY60 Terminal block (20P)→Terminal block (18P) × 2

Conversion adapter model	MELSEC-AnS series module model	No. of output points	MELSEC-Q series module model	No. of required modules
ERNT-ASQTY60	A1SY60	16 points	QY68A	2 modules

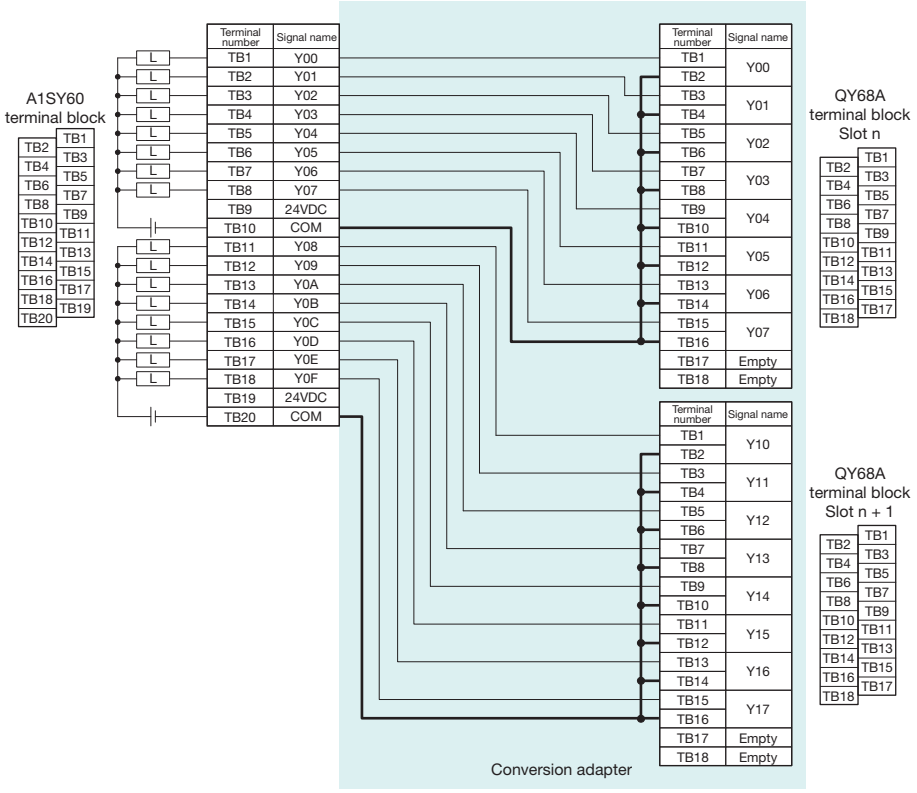

Notes
1. The wiring connected to the 24VDC terminals (TB9 and TB19) on the MELSEC-AnS side is not required. However, leaving the connection as is causes no problem because those wires are not connected in the conversion adapter.

[Specification comparison chart]

Specification \ Model		MELSEC-AnS series	MELSEC-Q series
		A1SY60 (Sink type)	QY68A (Sink/Source type)
No. of output points		16 points	8 points
Isolation method		Photocoupler isolation	Photocoupler isolation
Rated load voltage		24VDC	5 to 24VDC (+20/-10%)
Maximum load current		2A/point, 4A/common (25˚C) 1.8A/point, 3.6A/common (45˚C) 1.6A/point, 3.2A/common (55˚C)	2A/point, 8A/module
Maximum rush current		8A, 10ms or less	8A, 10ms or less
OFF leakage current		0.1mA or less	0.1mA or less
ON maximum voltage drop		0.9VDC (TYP) 2A 1.5VDC (MAX) 0.5A	0.3VDC (MAX) 2A
Response time	OFF→ON	2ms or less	3ms or less
	ON→OFF	2ms or less (Resistance load)	10ms or less (Resistance load)
Surge suppressor		Zener diode	Zener diode
Fuse		Yes	No
Internal current consumption		120mA (TYP. all points ON)	110mA (MAX all points ON)
Wiring method for common		8 points/common	All points independent
External interface		20-point terminal block	18-point terminal block

Notes
2. For ▭ areas, verify that the MELSEC-Q series module specifications satisfy the specifications of the connected device/equipment.
3. For detailed and general specifications not described in the specification comparison chart, refer to the user's manual of the module used. Note that the areas where the specifications differ between the MELSEC-AnS series and the MELSEC-Q series are restricted in terms of specifications during replacement. Verify the specifications of the connected devices.

●Program precautions
QY68A is a 16-point occupied module, requiring a program change of the latter 8 points Y08 to Y0F used in A1SY60 to Y10 to Y17.

3) ERNT-ASQTY60E Terminal block (20P)→Terminal block (18P) × 2

Conversion adapter model	MELSEC-AnS series module model	No. of output points	MELSEC-Q series module model	No. of required modules
ERNT-ASQTY60E	A1SY60E	16 points	QY68A	2 modules

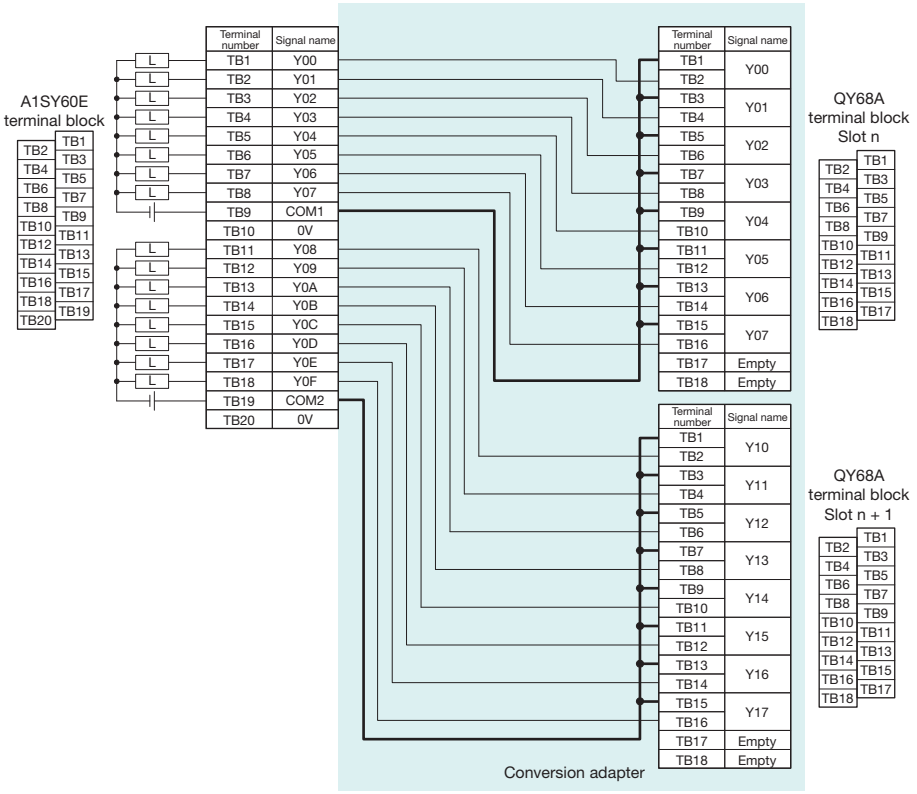

Notes
1. The wiring connected to the 0V terminals (TB10, TB20) on the MELSEC-AnS side is not required. Further, in a case where the load voltage is 5VDC, the connected 12/24VDC power supply is also not required. However, leaving the connection as is causes no problem because those wires are not connected in the conversion adapter.

[With 12/24VDC load voltage]

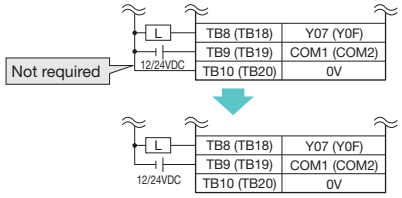

[With 5VDC load voltage]

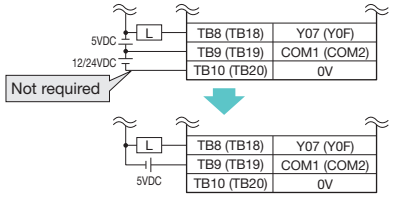

[Specification comparison chart]

Specification \ Model		MELSEC-AnS series	MELSEC-Q series
		A1SY60E (Source type)	QY68A (Sink/Source type)
No. of output points		16 points	8 points
Isolation method		Photocoupler isolation	Photocoupler isolation
Rated load voltage		5/12/24VDC	5 to 24VDC (+20/-10%)
Maximum load current		2A/point (Condition: $\tau = \frac{L}{R} \leq 2.5$ms) 4A/common	2A/point, 8A/module
Maximum rush current		8A, 10ms or less	8A, 10ms or less
OFF leakage current		0.1mA or less	0.1mA or less
ON maximum voltage drop		0.2VDC (MAX) 1A 0.4VDC (MAX) 2A	0.3VDC (MAX) 2A
Response time	OFF→ON	3ms or less	3ms or less
	ON→OFF	10ms or less (Resistance load)	10ms or less (Resistance load)
Surge suppressor		Zener diode	Zener diode
Fuse		Yes	No
Internal current consumption		200mA (TYP. all points ON)	110mA (TYP all points ON)
Wiring method for common		8 points/common	All points independent
External interface		20-point terminal block	18-point terminal block

Notes
2. For ▭ areas, verify that the MELSEC-Q series module specifications satisfy the specifications of the connected device/equipment.
3. For detailed and general specifications not described in the specification comparison chart, refer to the user's manual of the module used. Note that the areas where the specifications differ between the MELSEC-AnS series and the MELSEC-Q series are restricted in terms of specifications during replacement. Verify the specifications of the connected devices.

•Program precautions
QY68A is a 16-point occupied module, requiring a program change of the latter 8 points Y08 to Y0F used in A1SY60E to Y10 to Y17.

For Analog Modules

1-slot type

1) ERNT-ASQT64AD Terminal block (20P)→Terminal block (18P)

Conversion adapter model	MELSEC-AnS series module model	No. of channels	MELSEC-Q series module model
ERNT-ASQT64AD	A1S64AD	4 channels	Q64AD

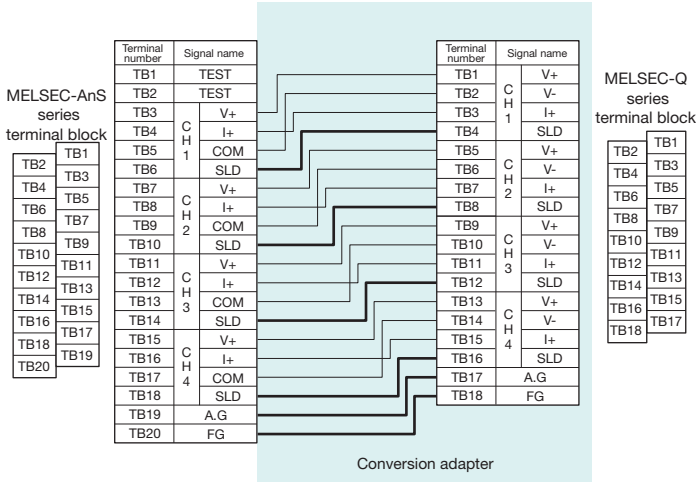

Notes
1. Be sure to ground the FG terminal (TB20).

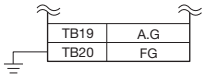

2. Q64AD does not have an offset/gain setting terminal. For offset/gain setting, refer to the Q64AD user's manual.

[Specification comparison chart]

Specification \ Model		MELSEC-AnS series A1S64AD	MELSEC-Q series Q64AD
Analog input	Voltage	-10 to 0 to 10VDC (Input resistance: 1MΩ)	-10 to 10VDC (Input resistance: 1MΩ)
	Current	-20mA to 0 to 20mA (Input resistance: 250MΩ)	0 to 20mA DC (Input resistance: 250Ω)
Digital output		16-bit signed binary When set to 1/4000, -4096 to 4095 When set to 1/8000, -8192 to 8191 When set to 1/12000, -12288 to 12287	16-bit signed binary (Normal resolution mode: -4096 to 4095, High resolution mode: -12288 to 12287, -16384 to 16383)

I/O characteristics

Analog input	Digital output value (With a 5V/20mA gain and 0V/0mA offset) When set to 1/4000	When set to 1/8000	When set to 1/12000
10V	4000	8000	12000
5V or 20mA	2000	4000	6000
0V or 0mA	0	0	0
-5V or -20mA	-2000	-4000	-6000
-10V	-4000	-8000	-12000

Maximum resolution

Analog input	Digital output value When set to 1/4000	When set to 1/8000	When set to 1/12000
Voltage input	2.5mV	1.25mV	0.83mV
Current input	10μA	5μA	3.33μA

Analog input range		Normal resolution mode: Digital output value	Normal resolution mode: Maximum resolution	High resolution mode: Digital output value	High resolution mode: Maximum resolution
Voltage	0 to 10V	0 to 4000	2.5mV	0 to 16000	0.625mV
	0 to 5V		1.25mV	0 to 12000	0.416mV
	1 to 5V		1.0mV		0.333mV
	-10 to 10V	-4000 to 4000	2.5mV	-16000 to 16000	0.625mV
	User range setting		0.375mV	-12000 to 12000	0.333mV
Current	0 to 20mA	0 to 4000	5μA	0 to 12000	1.66μA
	4 to 20mA		4μA		1.33μA
	User range setting	-4000 to 4000	1.37μA	-12000 to 12000	1.33μA

Overall accuracy

Analog input	Digital output value (With a 5V/20mA gain and 0V/0mA offset) When set to 1/4000	When set to 1/8000	When set to 1/12000
Within ±1.0%	±40	±80	±120

Analog input range		Normal resolution mode: Ambient temperature 0 to 55°C, With temperature drift correction	Normal resolution mode: Ambient temperature 0 to 55°C, No temperature drift correction	Normal resolution mode: Ambient temperature 25±5°C	High resolution mode: Ambient temperature 0 to 55°C, With temperature drift correction	High resolution mode: Ambient temperature 0 to 55°C, No temperature drift correction	High resolution mode: Ambient temperature 25±5°C
Voltage	0 to 10V	Within ±0.3% (±12 digits)	Within ±0.4% (±16 digits)	Within ±0.1% (±4 digits)	Within ±0.3% (±48 digits)	Within ±0.4% (±64 digits)	Within ±0.1% (±16 digits)
	-10 to 10V						
	0 to 5V						
	-1 to 5V				Within ±0.3% (±36 digits)	Within ±0.4% (±48 digits)	Within ±0.1% (±12 digits)
	User range setting						
Current	0 to 20mA						
	4 to 20mA						
	User range setting						

		MELSEC-AnS series A1S64AD	MELSEC-Q series Q64AD
Maximum conversion speed		20ms/channel	80μs/channel (Add 160μs regardless of the number of channels used when temperature drift correction is used.)
Absolute maximum input	Voltage	±15V	±15V
	Current	±30mA	±30mA
No. of analog input points		4 channels/module	4 channels/module
Isolation method	Between input terminal and programmable controller power supply	Photocoupler isolation	Photocoupler isolation
	Between channels	Non-isolated	Non-isolated
No. of occupied points		32 points	16 points
Connected terminal block		20-point terminal block	18-point terminal block
Current consumption		0.4A	0.63A

Notes
3. For ▭ areas, verify that the MELSEC-Q series module specifications satisfy the specifications of the connected device/equipment.
4. For detailed and general specifications not described in the specification comparison chart, refer to the user's manual of the module used. Note that the areas where the specifications differ between the MELSEC-AnS series and the MELSEC-Q series are restricted in terms of specifications during replacement. Verify the specifications of the connected devices.

●Program precautions
1) With A1S64AD and Q64AD, the input/output signals (X, Y) and buffer memory address assignments differ. The sequence program needs to be changed.
2) Q64AD has a faster conversion speed than A1S64AD. As a result, the possibility exists that noise not introduced in A1S64AD will be introduced as analog signals in Q64AD. In such a case, use an averaging processing function to remove the impact of the noise.

2) ERNT-ASQT68AD Terminal block (20P)→Terminal block (18P)

Conversion adapter model	MELSEC-AnS series module model	No. of channels	MELSEC-Q series module model
ERNT-ASQT68AD	A1S68AD (Voltage input)	8 channels	Q68ADV
	A1S68AD (Current input)	8 channels	Q68ADI

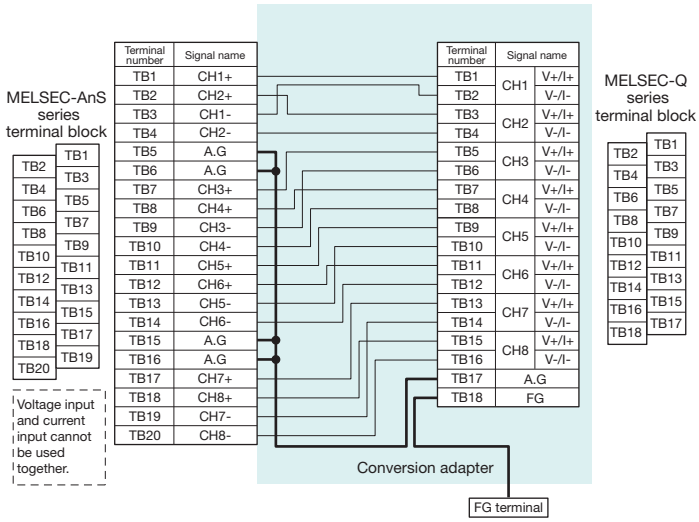

Notes
1. Q68ADV/I analog input cannot use voltage input and current input together in a single module. If voltage input and current input are used together in A1S68AD (one module), the conversion adapter cannot be used. In such a case, execute direct wiring to the voltage input module (Q68ADV, etc.) and current input module (Q68ADI, etc.).
2. Be sure to ground the FG terminal.

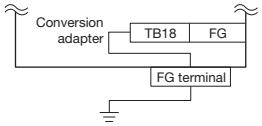

[Specification comparison chart]

Specification \ Model		MELSEC-AnS series	MELSEC-Q series	
		A1S68AD	Q68ADV	Q68ADI
Analog input	Voltage	-10 to 0 to 10VDC (Input resistance: 1MΩ)	-10 to 10VDC (Input resistance: 1MΩ)	–
	Current	0 to 20mA (Input resistance: 250MΩ)	–	0 to 20mA DC (Input resistance: 250Ω)
Digital output		16-bit signed binary	16-bit signed binary (Normal resolution mode: -4096 to 4095, High resolution mode: -12288 to 12287, -16384 to 16383)	

I/O characteristics

Analog input	Digital output
0 to 10V	0 to 4000
-10 to 10V	-2000 to 2000
0 to 5V or 0 to 20mA	0 to 4000
1 to 5V or 4 to 20mA	0 to 4000

Maximum resolution

Analog input	Digital output
0 to 10V	2.5mV
-10 to 10V	5mV
0 to 5V	1.25mV
1 to 5V	1.0mV
0 to 20mA	5μA
4 to 20mA	4μA

Analog input range / Maximum resolution

	Analog input range	Normal resolution mode: Digital output value	Normal resolution mode: Maximum resolution	High resolution mode: Digital output value	High resolution mode: Maximum resolution
Voltage	0 to 10V	0 to 4000	2.5mV	0 to 16000	0.625mV
Voltage	0 to 5V	0 to 4000	1.25mV	0 to 12000	0.416mV
Voltage	1 to 5V	0 to 4000	1.0mV	0 to 12000	0.333mV
Voltage	-10 to 10V	-4000 to 4000	2.5mV	-16000 to 16000	0.625mV
Voltage	User range setting	-4000 to 4000	0.375mV	-12000 to 12000	0.333mV
Current	0 to 20mA	0 to 4000	5μA	0 to 12000	1.66μA
Current	4 to 20mA	0 to 4000	4μA	0 to 12000	1.33μA
Current	User range setting	-4000 to 4000	1.37μA	-12000 to 12000	1.33μA

Overall accuracy

	Analog input range	Normal resolution mode: Ambient temperature 0 to 55°C, With temperature drift correction	Normal resolution mode: Ambient temperature 0 to 55°C, No temperature drift correction	Normal resolution mode: Ambient temperature 25±5°C	High resolution mode: Ambient temperature 0 to 55°C, With temperature drift correction	High resolution mode: Ambient temperature 0 to 55°C, No temperature drift correction	High resolution mode: Ambient temperature 25±5°C
Voltage	0 to 10V	Within ±0.3% (±12 digits)	Within ±0.4% (±16 digits)	Within ±0.1% (±4 digits)	Within ±0.3% (±48 digits)	Within ±0.4% (±64 digits)	Within ±0.1% (±16 digits)
Voltage	-10 to 10V						
Voltage	0 to 5V						
Voltage	1 to 5V						
Voltage	User range setting				Within ±0.3% (±36 digits)	Within ±0.4% (±48 digits)	Within ±0.1% (±12 digits)
Current	0 to 20mA						
Current	4 to 20mA						
Current	User range setting						

Overall accuracy: Within ±1.0% (Digital output value: ±40)

Maximum conversion speed		0.5ms/channel	80μs/channel (Add 160μs regardless of the number of channels used when temperature drift correction is used.)
Absolute maximum input	Voltage	±35V	±15V
	Current	±30mA	±30mA
No. of analog input points		8 channels/module	8 channels/module
Isolation method	Between input terminal and programmable controller power supply	Photocoupler isolation	Photocoupler isolation
	Between channels	Non-isolated	Non-isolated
No. of occupied points		32 points	16 points
Connected terminal block		20-point terminal block	18-point terminal block
Current consumption		0.4A	0.64A

Notes
3. For ▭ areas, verify that the MELSEC-Q series module specifications satisfy the specifications of the connected device/equipment.
4. For detailed and general specifications not described in the specification comparison chart, refer to the user's manual of the module used. Note that the areas where the specifications differ between the MELSEC-AnS series and the MELSEC-Q series are restricted in terms of specifications during replacement. Verify the specifications of the connected devices.

●Program precautions
1) With A1S68AD and Q68ADV/Q68ADI, the input/output signals (X, Y) and buffer memory address assignments differ. The sequence program needs to be changed.
2) Q68ADV/Q68ADI has a faster conversion speed than A1S68AD, resulting in the possibility that noise not introduced in A1S68AD will be introduced as analog signals in Q68ADV/Q68ADI. In such a case, use an averaging processing function to remove the impact of the noise.

3) ERNT-ASQT68AD-G Terminal block (20P)→Connector (40P)

Conversion adapter model	MELSEC-AnS series module model	No. of channels	MELSEC-Q series module model
ERNT-ASQT68AD-G	A1S68AD	8 channels	Q68AD-G

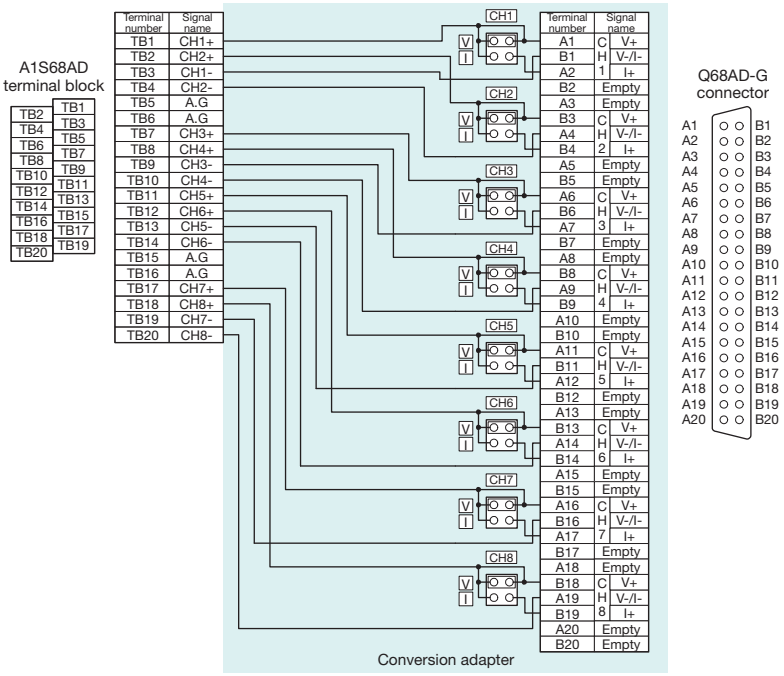

Notes
1. Set the short bar of the setting pin located inside the conversion adapter to the V side during voltage input and to the I side during current input, in accordance with the input of each channel CH1 to CH8. Note that, at the time of factory shipment, all channels are set to voltage input (the V side).
2. Q68AD-G does not have an AG terminal. The wiring connected to the AG terminals (TB5, TB6, TB15, TB16) on the MELSEC-AnS side, therefore, is not required. However, leaving the connection as is causes no problem because those wires are not connected in the conversion adapter.
3. After setting the V/I setting pin, connect the external wiring.

[Specification comparison chart]

Specification \ Model		MELSEC-AnS series A1S68AD	MELSEC-Q series Q68AD-G
Analog input	Voltage	-10 to 0 to +10VDC (Input resistance: 1MΩ or more)	
	Current	0 to 20mA DC (Input resistance: 250Ω)	
Digital input		16-bit signed binary	16-bit signed binary (Normal resolution mode: -4096 to 4095, High resolution mode: -12288 to 12287, -16384 to 16383)
	During the use of scaling function	–	16-bit signed binary (-32768 to 32767)

I/O characteristics

Analog input	Digital output
0 to 10V	0 to 4000
-10 to 10V	-2000 to 2000
0 to 5V or 0 to 20mA	0 to 4000
1 to 5V or 4 to 20mA	0 to 4000

Input	Analog input range	Normal resolution mode: Digital output value	Normal resolution mode: Resolution	High resolution mode: Digital output value	High resolution mode: Resolution
Voltage	0 to 10V	0 to 4000	2.5mV	0 to 16000	0.625mV
	0 to 5V		1.25mV	0 to 12000	0.416mV
	1 to 5V		1.0mV		0.333mV
	1 to 5V (Extended mode)	-1000 to 4500	1.0mV	-3000 to 13500	0.333mV
	-10 to 10V	-4000 to 4000	2.5mV	-16000 to 16000	0.625mV
	User range setting		0.375mV	-12000 to 12000	0.333mV
Current	0 to 20mA	0 to 4000	5μA	0 to 12000	1.66μA
	4 to 20mA		4μA		1.33μA
	4 to 20mA (Extended mode)	-1000 to 4500	4μA	-3000 to 13500	1.33μA
	User range setting	-4000 to 4000	1.37μA	-12000 to 12000	1.33μA

Maximum resolution

Analog input	Digital output
0 to 10V	2.5mV
-10 to 10V	5mV
0 to 5V	1.25mV
1 to 5V	1mV
0 to 20mA	5μA

Overall accuracy	Reference accuracy (*1)	Within ±1% (Digital output value: ±40)	±0.1% (Normal resolution mode: ±4 digits (*2); High resolution mode (0 to 10V, -10 to 10V): ±16 digits (*2); High resolution mode (other than the above range): ±12 digits (*2))
	Temperature coefficient (*3)	–	±71.4ppm/°C (0.00714%/°C)
Maximum conversion speed [sampling cycle (*4)]		0.5ms/channel (*6)	10ms/channel
Response time (*5)		–	20ms
Absolute maximum input		Voltage: ±35V, Current: ±30mA	Voltage: ±15V, Current: ±30mA
No. of analog input points		8 channels/module	
Isolation method	Between input terminal and programmable controller power supply	Photocoupler isolation	Transformer isolation
	Between analog input channels	Non-isolated	Transformer isolation
No. of occupied I/O points		32 points	16 points
Connection method		20-point terminal block	40-pin connector
Internal current consumption (5VDC)		0.4A	0.46A

*1: Accuracy of ambient temperature during offset/gain setting.
*2: "2 digits" indicates the digital value.
*3: Accuracy per 1°C temperature change.
*4: Cycle by which the A/D conversion value is updated.
*5: Time until the input signal reaches the AD converter inside Q68AD-G.
*6: When averaging processing is specified to even one channel, the setting becomes 1 ms/channel for all channels.

Notes
4. For ▭ areas, verify that the MELSEC-Q series module specifications satisfy the specifications of the connected device/equipment.
5. For detailed and general specifications not described in the specification comparison chart, refer to the user's manual of the module used. Note that the areas where the specifications differ between the MELSEC-AnS series and the MELSEC-Q series are restricted in terms of specifications during replacement. Verify the specifications of the connected devices.

●Program precautions
1) With A1S68AD and Q68AD-G, the input/output signals (X, Y) and buffer memory address assignments differ. The sequence program needs to be changed.
2) An input range set by a DIP switch in A1S68AD is set using the intelligent function module switch setting in Q68AD-G.

4) ERNT-ASQT62DA Terminal block (20P)→Terminal block (18P)

Conversion adapter model	MELSEC-AnS series module model	No. of channels	MELSEC-Q series module model
ERNT-ASQT62DA	A1S62DA	2 channels	Q62DAN

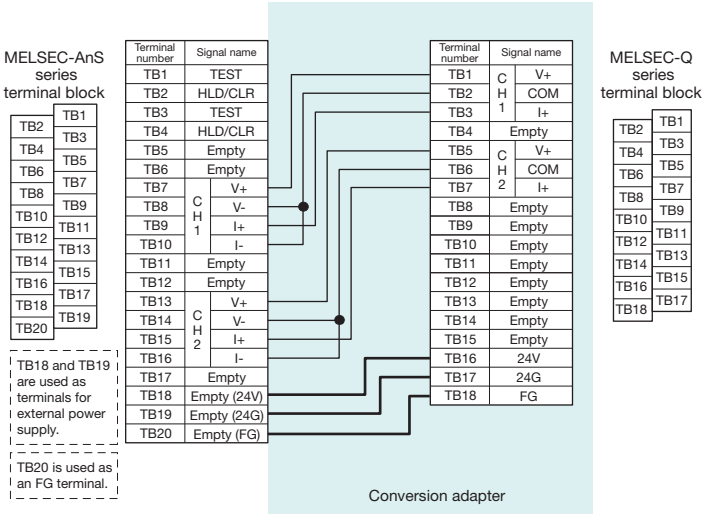

Notes
1. For the power supply (power supply terminals TB16 and TB17) on the Q62DAN side, use terminal numbers TB18 and TB19 on the MELSEC-AnS series side.

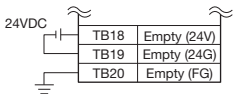

2. Ground the FG terminal (terminal number TB18) on the Q62DAN side using terminal number TB20 on the MELSEC-AnS series side.
3. Q62DAN does not have an offset/gain setting terminal or analog output hold/clear setting terminal. Analog output hold/clear setting needs to be performed using Q62DAN intelligent function module switch settings. For offset/gain and analog output hold/clear settings, refer to the Q62DAN user's manual.

[Specification comparison chart]

Specification \ Model		MELSEC-AnS series	MELSEC-Q series
		A1S62DA	Q62DAN
Digital input		16-bit signed binary Voltage output: 1/4000: -4000 to 4000; 1/8000: -8000 to 8000; 1/12000: -12000 to 12000 Current output: 0 to 4000; 0 to 8000; 0 to 12000	16-bit signed binary (Normal resolution mode: -4096 to 4095, High resolution mode: -12288 to 12287, -16384 to 16383)
Analog output	Voltage	-10 to 0 to 10VDC (External load resistance: 2kΩ to 1MΩ)	-10 to 10VDC (External load resistance value: 1kΩ to 1MΩ)
	Current	0 to 20mA DC (External load resistance: 0Ω to 600Ω)	0 to 20mA DC (External load resistance value: 0Ω to 600Ω)

I/O characteristics

	Resolution	1/4000	1/8000	1/12000	Analog output value
Voltage	Digital input value	4000	8000	12000	10V
		2000	4000	6000	5V
		0	0	0	0V
		-2000	-4000	-6000	-5V
		-4000	-8000	-12000	-10V
Current		4000	8000	12000	20mA
		2000	4000	6000	12mA
		0	0	0	4mA

Maximum resolution

	Voltage output	Current output
1/4000	2.5mV (10V)	5μA (20mA)
1/8000	1.25mV (10V)	2.5μA (20mA)
1/12000	0.83mV (10V)	1.7μA (20mA)

Analog output range

	Analog output range	Normal resolution mode: Digital input value	Normal resolution mode: Maximum resolution	High resolution mode: Digital input value	High resolution mode: Maximum resolution
Voltage	0 to 5V	0 to 4000	1.25mV	0 to 12000	0.416mV
	1 to 5V		1.0mV		0.333mV
	-10 to 10V	-4000 to 4000	2.5mV	-16000 to 16000	0.625mV
	User range setting		0.75mV	-12000 to 12000	0.333mV
Current	0 to 20mA	0 to 4000	5μA	0 to 12000	1.66μA
	4 to 20mA		4μA		1.33μA
	User range setting	-4000 to 4000	1.5μA	-12000 to 12000	0.83μA

Specification \ Model		MELSEC-AnS series	MELSEC-Q series
		A1S62DA	Q62DAN
Overall accuracy		Voltage: ±1.0% (±100mV) Current: ±1.0% (±200μA)	At an ambient temperature of 25±5°C, within ±0.1% (Voltage: ±10mV, Current: ±20μA) At an ambient temperature of 0 to 55°C, within ±0.3% (Voltage: ±30mV, Current: ±60μA)
Maximum conversion speed		Within 25ms / 2 channels (Same for 1 channel)	80μs/channel
Absolute maximum output	Voltage	±12V	±12V
	Current	28mA	21mA
No. of analog output points		2 channels/module	2 channels/module
Isolation method	Between output terminal and programmable controller power supply	Photocoupler isolation	Photocoupler isolation
	Between channels	Non-isolated	Non-isolated
	Between external power supply and analog output	–	Transformer isolation
No. of occupied points		32 points	16 points
Connected terminal block		20-point terminal block	18-point terminal block
Current consumption		0.80A	0.33A
External power supply	Voltage	–	24VDC +20%, -15%
	Current	–	0.15A

Notes
4. For ▭ areas, verify that the MELSEC-Q series module specifications satisfy the specifications of the connected device/equipment.
5. For detailed and general specifications not described in the specification comparison chart, refer to the user's manual of the module used. Note that the areas where the specifications differ between the MELSEC-AnS series and the MELSEC-Q series are restricted in terms of specifications during replacement. Verify the specifications of the connected devices.

●Program precautions
With A1S62DA and Q62DAN, the input/output signals (X, Y) and buffer memory address assignments differ. The sequence program needs to be changed.

5) ERNT-ASQT68DA Terminal block (20P)→Terminal block (18P)

Conversion adapter model	MELSEC-AnS series module model	No. of channels	MELSEC-Q series module model
ERNT-ASQT68DA	A1S68DAV	8 channels	Q68DAVN
	A1S68DAI	8 channels	Q68DAIN

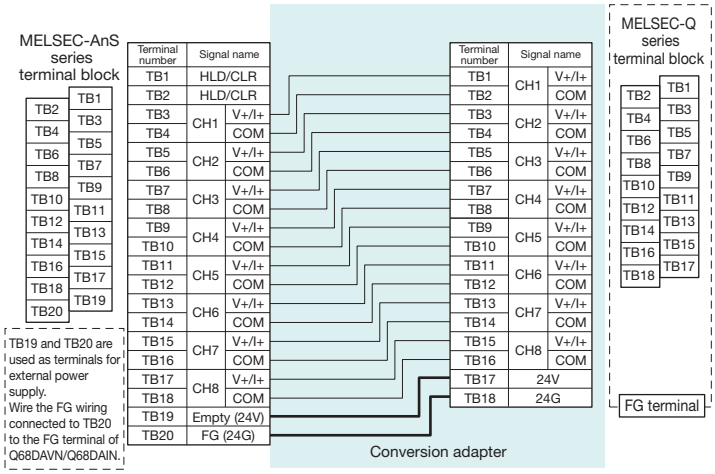

Notes
1. For the power supply (power supply terminals TB17 and TB18) to the Q68DAVN/Q68DAIN side, use terminal numbers TB19 and TB20 on the MELSEC-AnS series side.
2. Wire the FG terminal connected to terminal number TB20 on the MELSEC-AnS series side to the FG terminal on the Q68DAVN/Q68DAIN side.

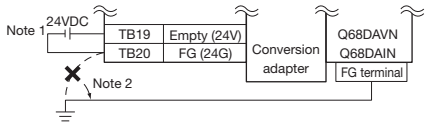

3. Q68DAVN/Q68DAIN does not have an analog output hold/clear setting terminal. Analog output hold/clear setting needs to be performed using Q68DAVN/Q68DAIN intelligent function module switch settings.

[Specification comparison chart]

Specification \ Model	MELSEC-AnS series A1S68DAV	MELSEC-Q series Q68DAVN
Digital input	16-bit signed binary -2048 to 2047	16-bit signed binary (Normal resolution mode: -4096 to 4095, High resolution mode: -12288 to 12287, -16384 to 16383)
Analog output	-10 to 0 to 10VDC (External load resistance: 2kΩ to 1MΩ)	-10 to 10VDC (External load resistance value: 1kΩ to 1MΩ)
I/O characteristics	Digital input / Analog output: 2000 / 10V; 1000 / 5V; 0 / 0V; -1000 / -5V; -2000 / -10V	Analog output range: Voltage 0 to 5V, 1 to 5V, -10 to 10V, User range setting; Normal resolution mode: Digital input value 0 to 4000, -4000 to 4000; Maximum resolution 1.25mA, 1.0mA, 2.5mA, 0.75mV; High resolution mode: Digital input value 0 to 12000, -16000 to 16000, -12000 to 12000; Maximum resolution 0.416mV, 0.333mV, 0.625mV, 0.333mV
Maximum resolution	5mV	
Overall accuracy	Voltage: ±1.0% (±100mV)	At ambient temperature of 25±5°C, within ±0.1% (Voltage: ±10mV) At ambient temperature of 0 to 55°C, within ±0.3% (Voltage: ±30mV)
Maximum conversion speed	Within 4ms / 8 channels	80μs/channel
Absolute maximum output	–	±12V
No. of analog output points	8 channels/module	8 channels/module
Isolation method: Between output terminal and programmable controller power supply	Photocoupler isolation	Photocoupler isolation
Isolation method: Between channels	Non-isolated	Non-isolated
Isolation method: Between external power supply and analog output	–	Transformer isolation
No. of occupied points	32 points	16 points
Connected terminal block	20-point terminal block	18-point terminal block
Current consumption	0.65A	0.38A
External power supply: Voltage	–	24VDC +20%, -15%
External power supply: Current	–	0.2A

Specification \ Model	MELSEC-AnS series A1S68DAI	MELSEC-Q series Q68DAIN
Digital input	16-bit signed binary 0 to 4096	16-bit signed binary (Normal resolution mode: -4096 to 4095, High resolution mode: -12288 to 12287, -16384 to 16383)
Analog output	4 to 20mA DC (External load resistance: 0 to 600Ω)	0 to 20mA DC (External load resistance value: 0 to 600Ω)
I/O characteristics	Digital input / Analog output: 4000 / 20mA; 2000 / 12mA; 0 / 4mA	Analog output range: Current 0 to 20mA, 4 to 20mA, User range setting; Normal resolution mode: Digital input value 0 to 4000, -4000 to 4000; Maximum resolution 5μA, 4μA, 1.5μA; High resolution mode: Digital input value 0 to 12000, -12000 to 12000; Maximum resolution 1.66μA, 1.33μA, 0.83μA
Maximum resolution	4μA	
Overall accuracy	Voltage: ±1.0% (±200μA)	At ambient temperature of 25±5°C, within ±0.1% (Current: ±20μA) At ambient temperature of 0 to 55°C, within ±0.3% (Current: ±60μA)
Maximum conversion speed	Within 4ms / 8 channels	80μs/channel
Absolute maximum output	–	21mA
No. of analog output points	8 channels/module	8 channels/module
Isolation method: Between output terminal and programmable controller power supply	Photocoupler isolation	Photocoupler isolation
Isolation method: Between channels	Non-isolated	Non-isolated
Isolation method: Between external power supply and analog output	–	Transformer isolation
No. of occupied points	32 points	16 points
Connected terminal block	20-point terminal block	18-point terminal block
Current consumption	0.85A	0.38A
External power supply: Voltage	–	24VDC +20%, -15%
External power supply: Current	–	0.27A

Notes
4. For ▭ areas, verify that the MELSEC-Q series module specifications satisfy the specifications of the connected device/equipment.
5. For detailed and general specifications not described in the specification comparison chart, refer to the user's manual of the module used. Note that the areas where the specifications differ between the MELSEC-AnS series and the MELSEC-Q series are restricted in terms of specifications during replacement. Verify the specifications of the connected devices.

●Program precautions
With A1S68DAV/A1S68DAI and Q68DAVN/Q68DAIN, the input/output signals (X, Y) and buffer memory address assignments differ. The sequence program needs to be changed.

6) ERNT-ASQT63ADA Terminal block (20P)→Terminal block (18P)

Conversion adapter model	MELSEC-AnS series module model	No. of channels	MELSEC-Q series module model
ERNT-ASQT63ADA	A1S63ADA	Input: 2 channels Output: 1 channels	Q64AD2DA

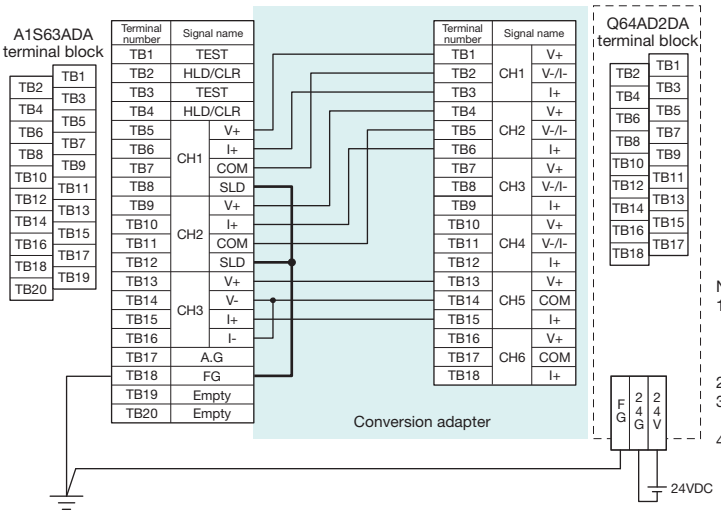

Notes
1. Q64AD2DA does not have an offset/gain setting terminal or analog output hold/clear setting terminal. Analog output hold/clear setting needs to be performed using Q64AD2DA intelligent function module switch settings. For offset/gain and analog output hold/clear settings, refer to the Q64AD2DA user's manual
2. Be sure to ground the FG terminal (TB18) of A1S63ADA.
3. The 24VDC power supply and FG need to be connected to the external power supply connector located below the Q64AD2DA module.
4. Q64AD2DA does not have an AG terminal. The wiring that connects the AG terminal (TB17) and the SDL terminal (TB12) on the MELSEC-AnS side, therefore, is not required. However, leaving the connection as is causes no problem because those wires are not connected in the conversion adapter.

[Specification comparison chart]

Specification \ Model		MELSEC-AnS series A1S63ADA	MELSEC-Q series Q64AD2DA
A/D conversion	No. of analog input points	2 channels	4 channels
	Analog input: Voltage	-10 to 0 to 10VDC (Input resistance: 1MΩ)	
	Analog input: Current	-20 to 0 to 20mA DC (Input resistance: 250Ω)	0 to 20mA DC (Input resistance: 250Ω)
	Digital output value	-4096 to 4095 (When set to a resolution of 1/4000) -8192 to 8191 (When set to a resolution of 1/8000) -12288 to 12287 (When set to a resolution of 1/12000)	Normal resolution mode: -96 to 4095, -4096 to 4095, -1096 to 4595 High resolution mode: -384 to 16383, -288 to 12287, -16384 to 16383, -3288 to 13787
	I/O characteristics	Analog input: 10V / Digital output value 1/4000: 4000 / 1/8000: 8000 / 1/12000: 12000 5V or 20mA: 2000 / 4000 / 6000 0V or 4mA: 0 / 0 / 0 -5V or -12mA: -2000 / -4000 / -6000 -10V: -4000 / -8000 / -12000	Input: Voltage 0 to 10V: Normal resolution mode: Digital output value 0 to 4000, Maximum resolution 2.5mV; High resolution mode: 0 to 16000, 0.625mV 0 to 5V: Normal resolution mode: 0 to 4000, 1.25mV; High resolution mode: 0 to 12000, 0.416mV 1 to 5V: Normal resolution mode: 0 to 4000, 1.0mV; High resolution mode: 0 to 12000, 0.333mV -10 to 10V: Normal resolution mode: -4000 to 4000, 2.5mV; High resolution mode: -16000 to 16000, 0.625mV 1 to 5V (Extended mode): Normal resolution mode: -1000 to 4500, 1.0mV; High resolution mode: -3000 to 13500, 0.333mV Input: Current 0 to 20mA: Normal resolution mode: 0 to 4000, 5μA; High resolution mode: 0 to 12000, 1.66μA 4 to 20mA: Normal resolution mode: 4μA; High resolution mode: 1.33μA 4 to 20mA (Extended mode): Normal resolution mode: -1000 to 4500, 4μA; High resolution mode: -3000 to 13500, 1.33μA
	Maximum resolution	1/4000: Voltage 2.5mV, Current 10μA 1/8000: Voltage 1.25mV, Current 5μA 1/12000: Voltage 0.83mV, Current 3.33μA	
	Conversion speed	1ms (When set to a resolution of 1/4000), 2ms (When set to a resolution of 1/8000), 3ms (When set to a resolution of 1/12000)	500μs/channel
	Overall accuracy	±1% (±40 (When set to a resolution of 1/4000) ±80 (When set to a resolution of 1/8000) ±120 (When set to a resolution of 1/12000))	Input: Voltage 0 to 10V: Normal resolution mode: 0 to 55°C ±0.4% (±16 digits), 25±5°C ±0.1% (±4 digits); High resolution mode: 0 to 55°C ±0.4% (±64 digits), 25±5°C ±0.1% (±16 digits) -10 to 10V: Normal resolution mode: 0 to 55°C ±0.4% (±16 digits), 25±5°C ±0.1% (±4 digits); High resolution mode: 0 to 55°C ±0.4% (±48 digits), 25±5°C ±0.1% (±12 digits) 0 to 5V: Normal resolution mode: 0 to 55°C ±0.4% (±16 digits), 25±5°C ±0.1% (±4 digits); High resolution mode: 0 to 55°C ±0.4% (±48 digits), 25±5°C ±0.1% (±12 digits) 1 to 5V: Normal resolution mode: 0 to 55°C ±0.4% (±16 digits), 25±5°C ±0.1% (±4 digits); High resolution mode: 0 to 55°C ±0.4% (±48 digits), 25±5°C ±0.1% (±12 digits) 1 to 5V (Extended mode): Normal resolution mode: 0 to 55°C ±0.4% (±16 digits), 25±5°C ±0.1% (±4 digits); High resolution mode: 0 to 55°C ±0.4% (±48 digits), 25±5°C ±0.1% (±12 digits) Input: Current 0 to 20mA: Normal resolution mode: 0 to 55°C ±0.4% (±16 digits), 25±5°C ±0.1% (±4 digits); High resolution mode: 0 to 55°C ±0.4% (±48 digits), 25±5°C ±0.1% (±12 digits) 4 to 20mA: Normal resolution mode: 0 to 55°C ±0.4% (±16 digits), 25±5°C ±0.1% (±4 digits); High resolution mode: 0 to 55°C ±0.4% (±48 digits), 25±5°C ±0.1% (±12 digits) 4 to 20mA (Extended mode): Normal resolution mode: 0 to 55°C ±0.4% (±16 digits), 25±5°C ±0.1% (±4 digits); High resolution mode: 0 to 55°C ±0.4% (±48 digits), 25±5°C ±0.1% (±12 digits)
	Absolute maximum input	Voltage: ±15V, Current: ±30mA	
D/A conversion	No. of analog output points	1 channel	2 channels
	Digital input	When set to a resolution of 1/4000: Voltage output -4000 to 4000, Current output 0 to 4000 When set to a resolution of 1/8000: Voltage output -8000 to 8000, Current output 0 to 8000 When set to a resolution of 1/12000: Voltage output -12000 to 12000, Current output 0 to 12000	Normal resolution mode: -96 to 4095, -4096 to 4095 High resolution mode: -288 to 12287, -16384 to 16383
	Analog output: Voltage	-10 to 10VDC (External load resistance: 2kΩ to 1MΩ)	-10 to 10VDC (External load resistance: 1kΩ to 1MΩ)
	Analog output: Current	0 to 20mA DC (External load resistance: 0Ω to 600Ω)	
	I/O characteristics	1/4000 / 1/8000 / 1/12000 / Analog output value: Voltage output / Current output 4000 / 8000 / 12000 / 10V / 20mA 2000 / 4000 / 6000 / 5V / 12mA 0 / 0 / 0 / 0V / 4mA -2000 / -4000 / -6000 / -5V / – -4000 / -8000 / -12000 / -10V / –	Output: Voltage 0 to 5V: Normal resolution mode: 0 to 4000, 1.25mV; High resolution mode: 0 to 12000, 0.416mV 1 to 5V: Normal resolution mode: 0 to 4000, 1.0mV; High resolution mode: 0 to 12000, 0.333mV -10 to 10V: Normal resolution mode: -4000 to 4000, 2.5mV; High resolution mode: -16000 to 16000, 0.625mV Output: Current 0 to 20mA: Normal resolution mode: 0 to 4000, 5μA; High resolution mode: 0 to 12000, 1.66μA 4 to 20mA: Normal resolution mode: 4μA; High resolution mode: 1.33μA
	Maximum resolution	When set to a resolution of 1/4000: Voltage output 2.5mV, Current output 5μA When set to a resolution of 1/8000: Voltage output 1.25mV, Current output 2.5μA When set to a resolution of 1/12000: Voltage output 0.83mV, Current output 1.7μA	

(Continued on next page)

(Continued from previous page)

Specification \ Model		MELSEC-AnS series	MELSEC-Q series		
		A1S63ADA	Q64AD2DA		
D/A conversion	Conversion speed	1ms (When set to a resolution of 1/4000), 2ms (When set to a resolution of 1/8000), 3ms (When set to a resolution of 1/12000)	500μs/channel		
	Overall accuracy	Voltage output: ±1% (±0.1V) Current output: ±1% (±0.2mA)	Analog input range	Normal resolution mode 0 to 55°C	High resolution mode 25±5°C
			Voltage: 0 to 5V	±0.3% (±30mV)	±0.1% (±10mV)
			Voltage: 1 to 5V	±0.3% (±30mV)	±0.1% (±10mV)
			Voltage: -10 to 10V	±0.3% (±30mV)	±0.1% (±10mV)
			Current: 0 to 20mA	±0.3% (±60μA)	±0.1% (±20μA)
			Current: 4 to 20mA	±0.3% (±60μA)	±0.1% (±20μA)
	Absolute maximum output	Voltage: ±12V, Current: +28mA	Voltage: ±12V, Current: +21mA		
	Output short-circuit protection	Yes			
Isolation method	Between I/O terminal and programmable controller power supply	Photocoupler isolation			
	Between channels	Non-isolated			
	Between external power supply and analog I/O	–	Non-isolated		
External power supply	Voltage	–	24VDC ±15%		
	Rush current	–	2.5A 150μs or less		
	Current consumption	–	0.19A		
No. of occupied I/O points		32 points	16 points		
Connection method		20-point terminal block	18-point terminal block		
Internal current consumption (5VDC)		0.8A	0.17A		

Notes
5. For ☐ areas, verify that the MELSEC-Q series module specifications satisfy the specifications of the connected device/equipment.
6. For detailed and general specifications not described in the specification comparison chart, refer to the user's manual of the module used. Note that the areas where the specifications differ between the MELSEC-AnS series and the MELSEC-Q series are restricted in terms of specifications during replacement. Verify the specifications of the connected devices.

●Program precautions
1) With A1S63ADA and Q64AD2DA, the input/output signals (X, Y) and buffer memory address assignments differ. The sequence program needs to be changed.
2) Q64AD2DA has a faster conversion speed than A1S63ADA. As a result, the possibility exists that noise not introduced in A1S63ADA will be introduced as analog signals in Q64AD2DA. In such a case, use an averaging processing function to remove the impact of the noise.
3) Use Q64AD2DA CH5 for analog output CH3 of A1S63ADA.

For High-Speed Counter Modules

1-slot type

1) ERNT-ASQTD61 Terminal block (20P)→Connector (40P)

Conversion adapter model	MELSEC-AnS series module model	No. of channels	MELSEC-Q series module model
ERNT-ASQTD61	A1SD61	1 channel	QD62
			QD62-H01
			QD62-H02

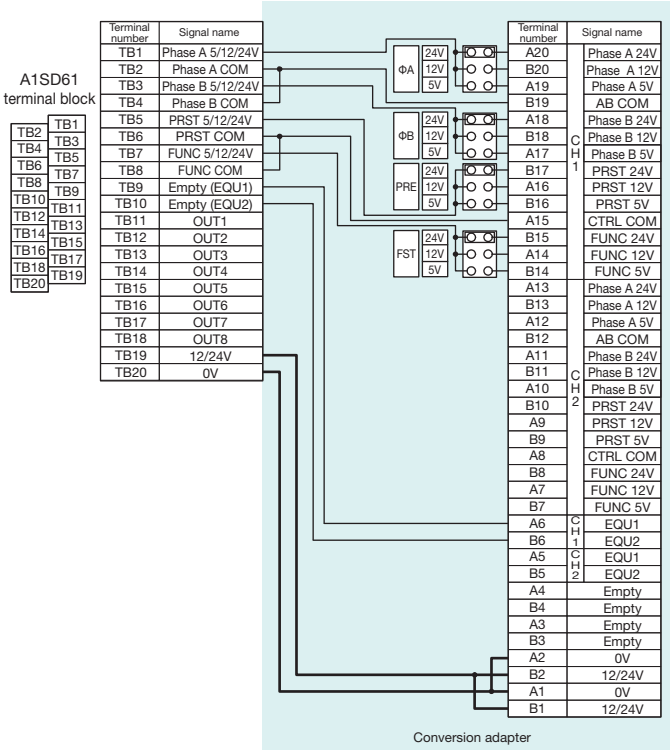

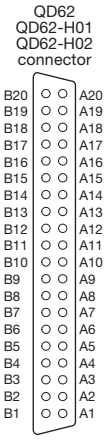

Notes
1. Set the short bar of the setting pin located inside the conversion adapter to 24V during 24V input, to 12V during 12V input, and to 5V during 5V input, in accordance with the input voltage of the phase A pulse input ΦA, the phase B pulse input ΦB, the preset input PRE, and the function start input FST. Note that, at the time of factory shipment, all channels are set to 24V.
2. QD62/QD62-H01/QD62-H02 does not have an A1SD61 limit switch output function. The OUT1 (TB11) to OUT8 (TB18) terminals therefore cannot be used. In a case where a substitution is to be made using a QD62 matching output function [CH1 EQU1 terminal (A6), CH1 EQU2 terminal (B6)], use the A1SD61 empty terminals [EQU1 terminal (TB9), EQU2 terminal (TB10)]. Note that specifications will differ, such as a fewer number of settings, etc.

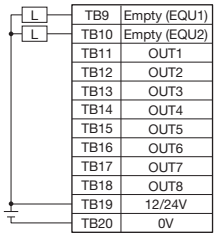

3. After setting the voltage setting pin, connect the external wiring.

[Specification comparison chart]

Specification \ Model		MELSEC-AnS series		MELSEC-Q series		
		A1SD61		QD62		
Counting speed switch settings		Switched by setting pin		Switched by intelligent function module switch setting		
		50k side	10k side	200k (100k to 200kPPS)	100k (10k to 100kPPS)	10k (10kPPS or less)
No. of channels		1 channel		2 channels		
Count input signal	Phase	1-phase input 2-phase input		1-phase input (1x/2x) 2-phase input (1x/2x/4x) CW/CCW input		
	Signal level (ΦA, ΦB)	5/12/24VDC 2 to 5mA				
Counter	Maximum counting speed	1-phase input: 50kPPS 2-phase input: 50kPPS	1-phase input: 10kPPS 2-phase input: 7kPPS	200kPPS (*1)	100kPPS (*1)	10kPPS (*1)
	Counting range	32-bit signed binary -2147483648 to 2147483647				
	Model	UP/DOWN preset counter + Ring counter function				
	Minimum count pulse width (duty ratio: 50%)	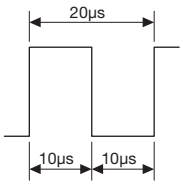 (1- or 2-phase input)	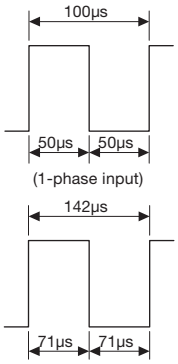 (2-phase input)	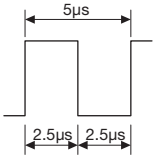 During 2-phase input Minimum phase difference: 1.25μs	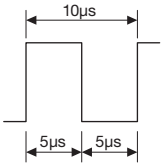 During 2-phase input Minimum phase difference: 2.5μs	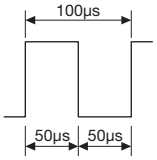 During 2-phase input Minimum phase difference: 25μs
Limit switch output	Comparison range	32-bit signed binary		–		
	Comparison result	NO contact operation dog ON address ≤ Count value ≤ Dog OFF address NC contact operation dog OFF address ≤ Count value ≤ Dog ON address		–		
Coincidence output	Comparison range	–		32-bit signed binary		
	Comparison result	–		Setting value < Count value Setting value = Count value Setting value > Count value		
External input	Preset Function start	5/12/24VDC 2 to 5mA				
External output	Limit switch output	Transistor (open collector) output 12/24VDC, 0.1A/point, 0.8A/common		–		
	Coincidence output	–		Transistor (sink type) output 12/24VDC, 0.5A/point, 2A/common		
No. of I/O occupied points		32 points		16 points		
Connection method		20-point terminal block		40-pin connector		
Internal current consumption (5VDC)		0.35A		0.30A		

*1: The counting speed is affected by the pulse rise time and fall time t. The countable counting speed is as shown in the table below.
When a pulse with a large rise/fall time is counted, miscounting may occur. Caution is required.

Rise/Fall time \ Counting speed switch setting	Common to 1-phase input and 2-phase input		
	200k	100k	10k
t=1.25μs or less	200kPPS	100kPPS	10kPPS
t=2.5μs or less	100kPPS	100kPPS	10kPPS
t=25μs or less	–	10kPPS	10kPPS
t=500μs	–	–	500PPS

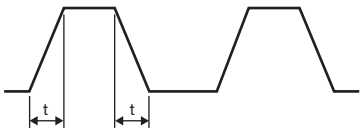

Notes
3. For ▭ areas, verify that the MELSEC-Q series module specifications satisfy the specifications of the connected device/equipment.
4. For detailed and general specifications not described in the specification comparison chart, refer to the user's manual of the module used. Note that the areas where the specifications differ between the MELSEC-AnS series and the MELSEC-Q series are restricted in terms of specifications during replacement. Verify the specifications of the connected devices.

●Program precautions
1) With A1SD61 and QD62, the input/output signals (X, Y) and buffer memory address assignments differ. The sequence program needs to be changed.
2) The QD62 coincidence output function is used as a substitute for the A1SD61 limit switch output function. The sequence program needs to be changed.
3) For QD62, use the CH1 input/output signals (X, Y) and buffer memory address. CH2 does not operate.
4) The counting speed setting set using the setting pin with A1SD61 is set using the intelligent function module switch setting with QD62.

Specification \ Model		MELSEC-AnS series		MELSEC-Q series
		A1SD61		QD62-H01
Counting speed switch settings		Switched by setting pin		Switched by intelligent function module switch setting
		50k side	10k side	Fixed to 50k
No. of channels		1 channel		2 channels
Count input signal	Phase	1-phase input 2-phase input		1-phase input (1x/2x) 2-phase input (1x/2x/4x) CW/CCW input
	Signal level (ΦA, ΦB)	5/12/24VDC 2 to 5mA		
Counter	Maximum counting speed	1-phase input: 50kPPS 2-phase input: 50kPPS	1-phase input: 10kPPS 2-phase input: 7kPPS	1-phase input: 50kPPS (*2) 2-phase input: 50kPPS (*2)
	Counting range	32-bit signed binary -2147483648 to 2147483647		
	Model	UP/DOWN preset counter + Ring counter function		
	Minimum count pulse width (duty ratio: 50%)	20µs, 10µs, 10µs (1- or 2-phase input)	100µs, 50µs, 50µs (1-phase input) 142µs, 71µs, 71µs (2-phase input)	20µs, 10µs, 10µs (1- or 2-phase input)
Limit switch output	Comparison range	32-bit signed binary		–
	Comparison result	NO contact operation dog ON address ≤ Count value ≤ Dog OFF address NC contact operation dog OFF address ≤ Count value ≤ Dog ON address		–
Coincidence output	Comparison range	–		32-bit signed binary
	Comparison result	–		Setting value < Count value Setting value = Count value Setting value > Count value
External input	Preset Function start	5/12/24VDC 2 to 5mA		
External output	Limit switch output	Transistor (open collector) output 12/24VDC, 0.1A/point, 0.8A/common		–
	Coincidence output	–		Transistor (sink type) output 12/24VDC, 0.5A/point, 2A/common
No. of I/O occupied points		32 points		16 points
Connection method		20-point terminal block		40-pin connector
Internal current consumption (5VDC)		0.35A		0.30A

*2: The counting speed is affected by the pulse rise time and fall time t. The countable counting speed is as shown in the table below. When a pulse larger than t=50µs is counted, miscounting may occur. Caution is required.

Rise/Fall time	Common to 1-phase input and 2-phase input
t=5µs	50kPPS
t=50µs	5kPPS

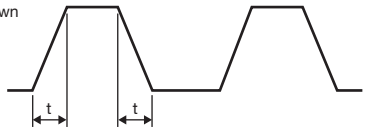

Notes
5. For ☐ areas, verify that the MELSEC-Q series module specifications satisfy the specifications of the connected device/equipment.
6. For detailed and general specifications not described in the specification comparison chart, refer to the user's manual of the module used. Note that the areas where the specifications differ between the MELSEC-AnS series and the MELSEC-Q series are restricted in terms of specifications during replacement. Verify the specifications of the connected devices.

●Program precautions

1) With A1SD61 and QD62-H01, the input/output signals (X, Y) and buffer memory address assignments differ. The sequence program needs to be changed.
2) The QD62-H01 coincidence output function is used as a substitute for the A1SD61 limit switch output function. The sequence program needs to be changed.
3) For QD62-H01, use the CH1 input/output signals (X, Y) and buffer memory address. CH2 does not operate.
4) The counting speed setting set using the setting pin with A1SD61 is set using the intelligent function module switch setting with QD62-H01.

Specification \ Model		MELSEC-AnS series		MELSEC-Q series
		A1SD61		QD62-H02
Counting speed switch settings		Switched by setting pin		Switched by intelligent function module switch setting
		50k side	10k side	Fixed to 10k
No. of channels		1 channel		2 channels
Count input signal	Phase	1-phase input 2-phase input		1-phase input (1x/2x) 2-phase input (1x/2x/4x) CW/CCW input
	Signal level (ΦA, ΦB)	5/12/24VDC 2 to 5mA		
Counter	Maximum counting speed	1-phase input: 50kPPS 2-phase input: 50kPPS	1-phase input: 10kPPS 2-phase input: 7kPPS	1-phase input: 10kPPS (*3) 2-phase input: 7kPPS (*3)
	Counting range	32-bit signed binary -2147483648 to 2147483647		
	Model	UP/DOWN preset counter + Ring counter function		
	Minimum count pulse width (duty ratio: 50%)	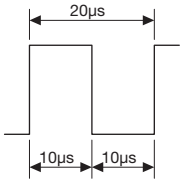 (1- or 2-phase input)	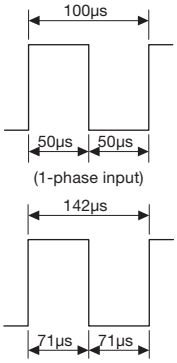	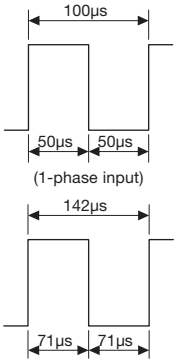
Limit switch output	Comparison range	32-bit signed binary		–
	Comparison result	NO contact operation dog ON address ≤ Count value ≤ Dog OFF address NC contact operation dog OFF address ≤ Count value ≤ Dog ON address		–
Coincidence output	Comparison range	–		32-bit signed binary
	Comparison result	–		Setting value < Count value Setting value = Count value Setting value > Count value
External input	Preset Function start	5/12/24VDC 2 to 5mA		
External output	Limit switch output	Transistor (open collector) output 12/24VDC, 0.1A/point, 0.8A/common		–
	Coincidence output	–		Transistor (sink type) output 12/24VDC, 0.5A/point, 2A/common
No. of I/O occupied points		32 points		16 points
Connection method		20-point terminal block		40-pin connector
Internal current consumption (5VDC)		0.35A		0.30A

*3: The counting speed is affected by the pulse rise time and fall time t. The countable counting speed is as shown in the table below. When a pulse larger than t=500µs is counted, miscounting may occur. Caution is required.

Rise/Fall time	1-phase input	2-phase input
t=5µs	10kPPS	7kPPS
t=500µs	500PPS	250PPS

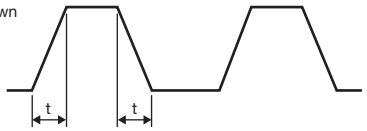

Note.
7. For ▭ areas, verify that the MELSEC-Q series module specifications satisfy the specifications of the connected device/equipment.
8. For detailed and general specifications not described in the specification comparison chart, refer to the user's manual of the module used. Note that the areas where the specifications differ between the MELSEC-AnS series and the MELSEC-Q series are restricted in terms of specifications during replacement. Verify the specifications of the connected devices.

●Program precautions

1) With A1SD61 and QD62-H02, the input/output signals (X, Y) and buffer memory address assignments differ. The sequence program needs to be changed.
2) The QD62-H02 coincidence output function is used as a substitute for the A1SD61 limit switch output function. The sequence program needs to be changed.
3) For QD62-H02, use the CH1 input/output signals (X, Y) and buffer memory address. CH2 does not operate.
4) The counting speed setting set using the setting pin with A1SD61 is set using the intelligent function module switch setting with QD62-H02.

2) ERNT-ASQTD62 Terminal block (20P)→Connector (40P)

Conversion adapter model	MELSEC-AnS series module model	No. of channels	MELSEC-Q series module model
ERNT-ASQTD62	A1SD62	2 channels	QD62
	A1SD62E		QD62E

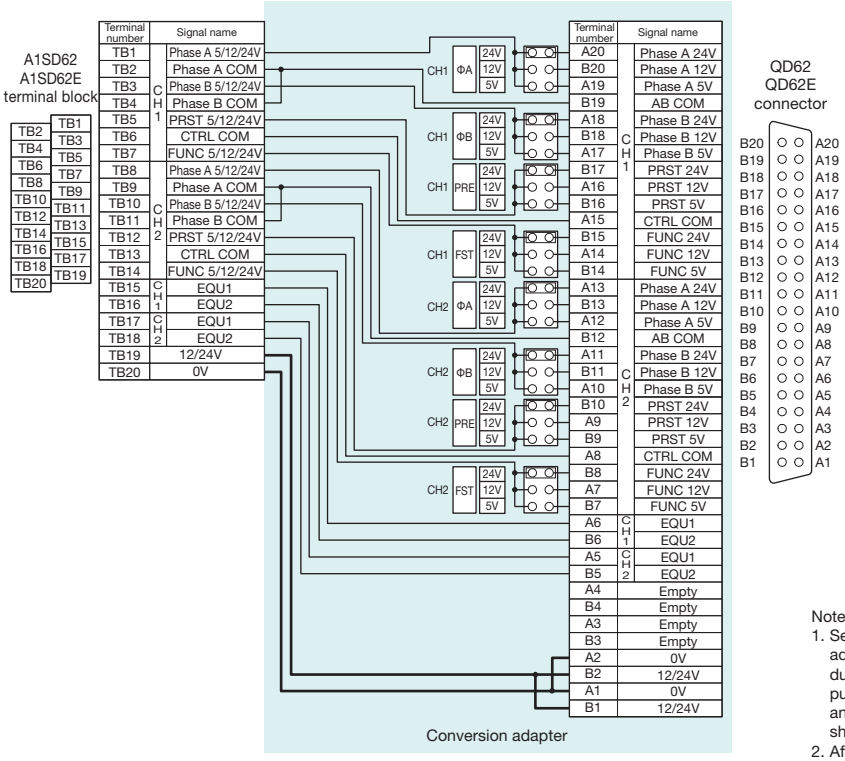

Notes
1. Set the short bar of the setting pin located inside the conversion adapter to 24V during [24V] input, to 12V during [12V] input, and to 5V during [5V] input, in accordance with the input voltage of the phase A pulse input [ΦA], the phase B pulse input [ΦB], the preset input [PRE], and the function start input [FST]. Note that, at the time of factory shipment, all channels are set to [24V].
2. After setting the voltage setting pin, connect the external wiring.

[Specification comparison chart]

Specification \ Model		MELSEC-AnS series		MELSEC-Q series		
		A1SD62		QD62		
Counting speed switch settings		Switched by setting pin		Switched by intelligent function module switch setting		
		100k side	10k side	200k (100k to 200kPPS)	100k (10k to 100kPPS)	10k (10kPPS or less)
No. of channels		2 channels				
Count input signal	Phase	1-phase input 2-phase input		1-phase input (1x/2x) 2-phase input (1x/2x/4x) CW/CCW input		
	Signal level (ΦA, ΦB)	5/12/24VDC 2 to 5mA				
Counter	Maximum counting speed	1-phase input: 100kPPS 2-phase input: 100kPPS	1-phase input: 10kPPS 2-phase input: 7kPPS	200kPPS (*1)	100kPPS (*1)	10kPPS (*1)
	Counting range	24-bit binary 0 to 16777215		32-bit signed binary -2147483648 to 2147483647		
	Model	UP/DOWN preset counter + Ring counter function				
	Minimum count pulse width (duty ratio: 50%)	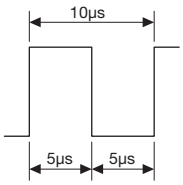 (1- or 2-phase input)	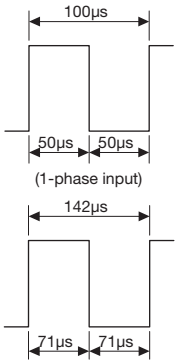	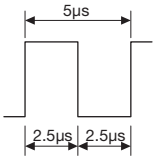 During 2-phase input Minimum phase difference: 1.25µs	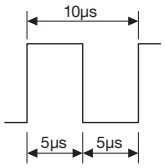 During 2-phase input Minimum phase difference: 2.5µs	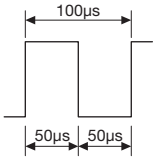 During 2-phase input Minimum phase difference: 25µs
Coincidence output	Comparison range	24-bit binary		32-bit signed binary		
	Comparison result	Setting value < Count value Setting value = Count value Setting value > Count value				
External input	Preset Function start	5/12/24VDC 2 to 5mA				
External output	Coincidence output	Transistor (sink type) output 12/24VDC, 0.5A/point, 2A/common				
No. of I/O occupied points		32 points		16 points		
Connection method		20-point terminal block		40-pin connector		
Internal current consumption (5VDC)		0.1A		0.30A		

*1: The counting speed is affected by the pulse rise time and fall time t. The countable counting speed is as shown in the table below.
When a pulse with a large rise/fall time is counted, miscounting may occur. Caution is required.

Rise/Fall time \ Counting speed switch setting	Common to 1-phase input and 2-phase input		
	200k	100k	10k
t=1.25µs or less	200kPPS	100kPPS	10kPPS
t=2.5µs or less	100kPPS	100kPPS	10kPPS
t=25µs or less	–	10kPPS	10kPPS
t=500µs	–	–	500PPS

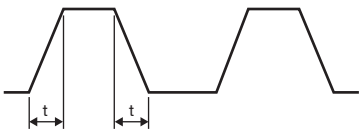

Notes
2. For ▭ areas, verify that the MELSEC-Q series module specifications satisfy the specifications of the connected device/equipment.
3. For detailed and general specifications not described in the specification comparison chart, refer to the user's manual of the module used. Note that the areas where the specifications differ between the MELSEC-AnS series and the MELSEC-Q series are restricted in terms of specifications during replacement. Verify the specifications of the connected devices.

●Program precautions
1) With A1SD62 and QD62, the input/output signals (X, Y) and buffer memory address assignments differ. The sequence program needs to be changed.
2) The counting speed setting set using the setting pin with A1SD62 is set using the intelligent function module switch setting with QD62.

Specification \ Model		MELSEC-AnS series		MELSEC-Q series		
		A1SD62E		QD62E		
Counting speed switch settings		Switched by setting pin		Switched by intelligent function module switch setting		
		100k side	10k side	200k (100k to 200kPPS)	100k (10k to 100kPPS)	10k (10kPPS or less)
No. of channels		2 channels				
Count input signal	Phase	1-phase input 2-phase input		1-phase input (1x/2x) 2-phase input (1x/2x/4x) CW/CCW input		
	Signal level (ΦA, ΦB)	5/12/24VDC 2 to 5mA				
Counter	Maximum counting speed	1-phase input: 100kPPS 2-phase input: 100kPPS	1-phase input: 10kPPS 2-phase input: 7kPPS	200kPPS (*2)	100kPPS (*2)	10kPPS (*2)
	Counting range	Binary with 24-bit code 0 to 16777215		32-bit signed binary -2147483648 to 2147483647		
	Model	UP/DOWN preset counter + Ring counter function				
	Minimum count pulse width (duty ratio: 50%)	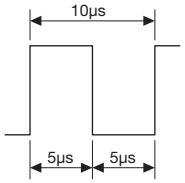 (1- or 2-phase input)	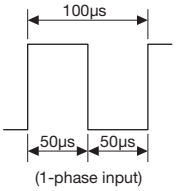 (1-phase input) 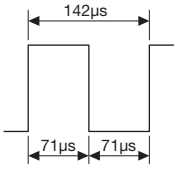 (2-phase input)	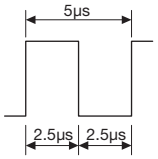 During 2-phase input Minimum phase difference: 1.25µs	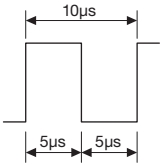 During 2-phase input Minimum phase difference: 2.5µs	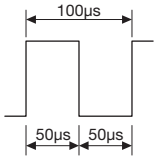 During 2-phase input Minimum phase difference: 25µs
Coincidence output	Comparison range	24-bit binary		32-bit signed binary		
	Comparison result	Setting value < Count value Setting value = Count value Setting value > Count value				
External input	Preset Function start	5/12/24VDC 2 to 5mA				
External output	Coincidence output	Transistor (source type) output 12/24VDC, 0.1A/point, 0.4A/common				
No. of I/O occupied points		32 points		16 points		
Connection method		20-point terminal block		40-pin connector		
Internal current consumption (5VDC)		0.1A		0.33A		

*2: The counting speed is affected by the pulse rise time and fall time t. The countable counting speed is as shown in the table below.
When a pulse with a large rise/fall time is counted, miscounting may occur. Caution is required.

Rise/Fall time \ Counting speed switch setting	Common to 1-phase input and 2-phase input		
	200k	100k	10k
t=1.25µs or less	200kPPS	100kPPS	10kPPS
t=2.5µs or less	100kPPS	100kPPS	10kPPS
t=25µs or less	–	10kPPS	10kPPS
t=500µs	–	–	500PPS

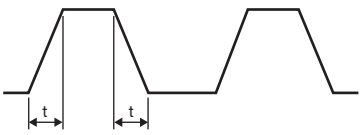

Notes
4. For ☐ areas, verify that the MELSEC-Q series module specifications satisfy the specifications of the connected device/equipment.
5. For detailed and general specifications not described in the specification comparison chart, refer to the user's manual of the module used. Note that the areas where the specifications differ between the MELSEC-AnS series and the MELSEC-Q series are restricted in terms of specifications during replacement. Verify the specifications of the connected devices.

•Program precautions
1) With A1SD62E and QD62E, the input/output signals (X, Y) and buffer memory address assignments differ. The sequence program needs to be changed.
2) The counting speed setting set using the setting pin with A1SD62E is set using the intelligent function module switch setting with QD62E.

3) ERNT-ASQTD62D Terminal block (20P)→Connector (40P)

Conversion adapter model	MELSEC-AnS series module model	No. of channels	MELSEC-Q series module model
ERNT-ASQTD62D	A1SD62D	2 channels	QD62D

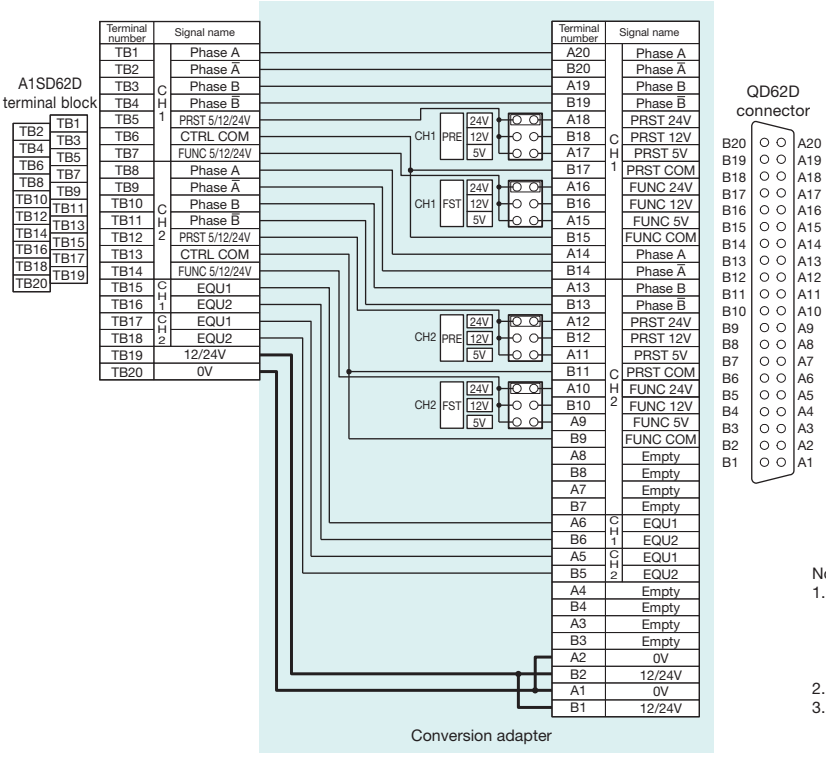

Notes
1. Set the short bar of the setting pin located inside the conversion adapter to 24V during [24V] input, to 12V during [12V] input, and to 5V during [5V] input, in accordance with the input voltage of the preset input [PRE] and the function start input [FST]. Note that, at the time of factory shipment, all channels are set to [24V].
2. After setting the voltage setting pin, connect the external wiring.
3. When the A1SD62D terminal block is used for sink load type, change the common type of the terminals for CTRL COM (TB6 and TB13) to negative.

[Specification comparison chart]

Specification \ Model		MELSEC-AnS series		MELSEC-Q series			
		A1SD62D		QD62D			
Counting speed switch settings		Switched by setting pin		Switched by intelligent function module switch setting			
		200k side	10k side	500k (200k to 500kPPS)	200k (100k to 200kPPS)	100k (10k to 100kPPS)	10k (10kPPS or less)
No. of channels		2 channels					
Count input signal	Phase	1-phase input 2-phase input		1-phase input (1x/2x) 2-phase input (1x/2x/4x) CW/CCW input			
	Signal level (ΦA, ΦB)	EIA standard RS-422-A Differential line driver level [AM26LS3I (Texas Instruments) or equivalent]					
Counter	Maximum counting speed	1-phase input: 200kPPS 2-phase input: 200kPPS	1-phase input: 10kPPS 2-phase input: 7kPPS	500kPPS (*1)	200kPPS (*1)	100kPPS (*1)	10kPPS (*1)
	Counting range	24-bit binary 0 to 16777215		32-bit signed binary -2147483648 to 2147483647			
	Model	UP/DOWN preset counter + Ring counter function					
	Minimum count pulse width (duty ratio: 50%)	5µs, 2.5µs 2.5µs (1- or 2-phase input)	100µs, 50µs 50µs (1-phase input) 142µs, 71µs 71µs (2-phase input)	2µs, 1µs 1µs During 2-phase input Minimum phase difference: 0.5µs	5µs, 2.5µs 2.5µs During 2-phase input Minimum phase difference: 1.25µs	10µs, 5µs 5µs During 2-phase input Minimum phase difference: 2.5µs	100µs, 50µs 50µs During 2-phase input Minimum phase difference: 25µs
Coincidence output	Comparison range	24-bit binary		32-bit signed binary			
	Comparison result	Setting value < Count value Setting value = Count value Setting value > Count value					
External input	Preset Function start	5/12/24VDC 2 to 5mA		5/12/24VDC 2 to 5mA (Connectable to EIA standard RS-422-A differential line driver)			
External output	Coincidence output	Transistor (sink type) output 12/24VDC, 0.5A/point, 2A/common					
No. of I/O occupied points		32 points		16 points			
Connection method		20-point terminal block		40-pin connector			
Internal current consumption (5VDC)		0.25A		0.38A			

*1: The counting speed is affected by the pulse rise time and fall time t. The countable counting speed is as shown in the table below.
When a pulse with a large rise/fall time is counted, miscounting may occur. Caution is required.

Rise/Fall time \ Counting speed switch setting	Common to 1-phase input and 2-phase input			
	500k	200k	100k	10k
t=0.5µs or less	500kPPS	200kPPS	100kPPS	10kPPS
t=1.25µs or less	200kPPS	200kPPS	100kPPS	10kPPS
t=2.5µs or less	–	100kPPS	100kPPS	10kPPS
t=25µs or less	–	–	10kPPS	10kPPS
t=500µs	–	–	–	500PPS

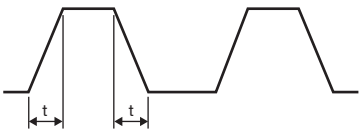

Notes
2. For ▭ areas, verify that the MELSEC-Q series module specifications satisfy the specifications of the connected device/equipment.
3. For detailed and general specifications not described in the specification comparison chart, refer to the user's manual of the module used. Note that the areas where the specifications differ between the MELSEC-AnS series and the MELSEC-Q series are restricted in terms of specifications during replacement. Verify the specifications of the connected devices.

●Program precautions
1) With A1SD62 and QD62D, the input/output signals (X, Y) and buffer memory address assignments differ. The sequence program needs to be changed.
2) The counting speed setting set using the setting pin with A1SD62D is set using the intelligent function module switch setting with QD62D.

For Temperature Input Modules

1-slot type

1) ERNT-ASQT68TD-H01 Terminal block (20P)→Connector (40P)
ERNT-ASQT68TD-H02 Terminal block (20P)→Connector (40P)

Conversion adapter model	MELSEC-AnS series module model	No. of channels	MELSEC-Q series module model
ERNT-ASQT68TD-H01	A1S68TD	8 channels	Q68TD-G-H01
ERNT-ASQT68TD-H02			Q68TD-G-H02

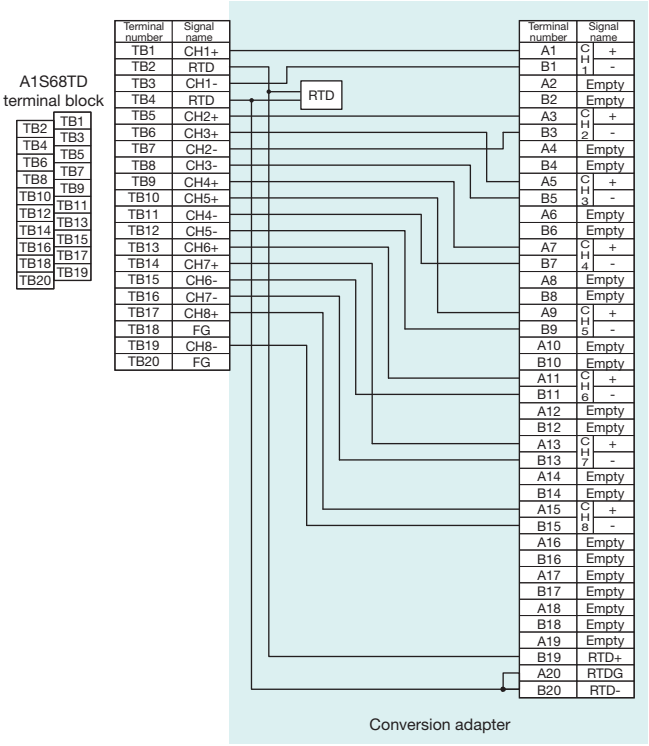

Notes

1. The cold junction compensation resistor (RTD) is built into the conversion adapter. Be sure to remove the cold junction compensation resistor (RTD) connected to the A1S68TD terminal block (TB2, TB4).

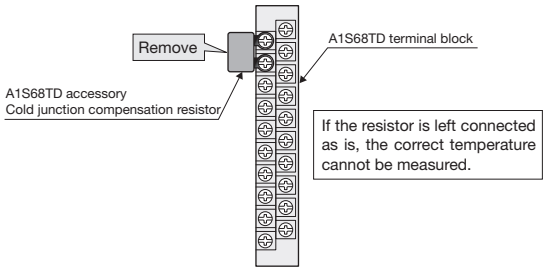

2. Q68TD-G-H01/Q68TD-G-H02 does not have an FG terminal. The FG line connected to the FG terminals (TB18, TB20) on the MELSEC-AnS side, therefore, is not required. However, leaving the connection as is causes no problem because those wires are not connected in the conversion adapter.

[Specification comparison chart]

Specification \ Model		MELSEC-AnS series	MELSEC-Q series	
		A1S68TD	Q68TD-G-H02	Q68TD-G-H01
Input temperature		0 to 1700°C	-270 to 1820°C	
Output	Temperature conversion value	16-bit signed binary (0 to 17000: Value to first decimal place × 10)	16-bit signed binary (-2700 to 18200: Value to first decimal place × 10)	
	Scaling value	16-bit signed binary (0 to 2000)	16-bit signed binary	
Thermocouple compliance standards		JIS C1602-1981	JIS C 1602-1995, IEC 60584-1 (1995), IEC 60584-2 (1982)	
Applicable thermocouple and conversion accuracy		See the table on the next page.	See the table on the next page.	
Cold junction compensation accuracy		±1.0°C		
Overall accuracy		Conversion accuracy + (Temperature characteristics × Operating ambient temperature change) + Cold junction compensation accuracy		
Resolution		B, R, S: 0.3°C K, E, J, T: 0.1°C	B, R, S, N: 0.3°C K, E, J, T: 0.1°C	
Conversion speed		400ms / 8 channels	640ms / 8 channels	320ms / 8 channels
No. of temperature input points		8 channels + Pt100 cold junction compensation / module		
Disconnection detection		Detected per channel		None (*1)
Isolation method	Between thermocouple input and programmable controller power supply	Transformer isolation		
	Between thermocouple input and channel			
	Between cold junction compensation and programmable controller power supply	Non-isolated		
No. of occupied I/O points		32 points	16 points	
Connection method		20-point terminal block	40-pin connector	
Internal current consumption (5VDC)		0.32A	0.65A	0.49A

*1: Q68TD-G-H01 is provided with a disconnection monitor function.

Notes

3. For ☐ areas, verify that the MELSEC-Q series module specifications satisfy the specifications of the connected device/equipment.
4. For detailed and general specifications not described in the specification comparison chart, refer to the user's manual of the module used. Note that the areas where the specifications differ between the MELSEC-AnS series and the MELSEC-Q series are restricted in terms of specifications during replacement. Verify the specifications of the connected devices.

[Applicable thermocouples and conversion accuracy]

Thermocouple	MELSEC-AnS series A1S68TD			MELSEC-Q series Q68TD-G-H02 Q68TD-G-H01			
	Measured temperature range	Conversion accuracy (At an operating ambient temperature of 25±5°C)	Temperature characteristics (With a 1°C operating ambient temperature change)	Measured temperature range (*2)	Conversion accuracy (At an operating ambient temperature of 25±5°C)	Temperature characteristics (With a 1°C operating ambient temperature change)	Maximum temperature error at a 55°C ambient temperature
B	–	–	–	0 to 600°C	(*3)	(*3)	(*3)
				600 to 800°C	±3.0°C	±0.4°C	±13.0°C
	800 to 1700°C	±2.5°C	±0.4°C	800 to 1700°C	±2.5°C		±12.5°C
	–	–	–	1700 to 1820°C	(*3)	(*3)	(*3)
R	–	–	–	-50 to 0°C	(*3)	(*3)	(*3)
				0 to 300°C	±2.5°C	±0.4°C	±12.5°C
	300 to 1600°C	±2°C	±0.3°C	300 to 1600°C	±2.0°C	±0.3°C	±9.5°C
	–	–	–	1600 to 1760°C	(*3)	(*3)	(*3)
S	–	–	–	-50 to 0°C	(*3)	(*3)	(*3)
				0 to 300°C	±2.5°C	±0.4°C	±12.5°C
	300 to 1600°C	±2°C	±0.3°C	300 to 1600°C	±2.0°C	±0.3°C	±9.5°C
	–	–	–	1600 to 1760°C	(*3)	(*3)	(*3)
K	–	–	–	-270 to -200°C	(*3)	(*3)	(*3)
				-200 to 0°C	±0.5°C or ±0.5% of measured temperature, whichever is greater	±0.06°C or ±0.2% of measured temperature, whichever is greater	±11.0°C
	0 to 1200°C	±0.5°C or ±0.25% of measured temperature, whichever is greater	±0.07°C or ±0.02% of measured temperature, whichever is greater	0 to 1200°C	±0.5°C or ±0.25% of measured temperature, whichever is greater	±0.06°C or ±0.02% of measured temperature, whichever is greater	±9.0°C
	–	–	–	1200 to 1370°C	(*3)	(*3)	(*3)
E	–	–	–	-270 to -200°C	(*3)	(*3)	(*3)
				-200 to 0°C	±0.5°C or ±0.5% of measured temperature, whichever is greater	±0.06°C or ±0.15% of measured temperature, whichever is greater	±8.5°C
	0 to 800°C	±0.5°C or ±0.25% of measured temperature, whichever is greater	±0.07°C or ±0.02% of measured temperature, whichever is greater	0 to 900°C	±0.5°C or ±0.25% of measured temperature, whichever is greater	±0.06°C or ±0.02% of measured temperature, whichever is greater	±6.75°C
	–	–	–	900 to 1000°C	(*3)	(*3)	(*3)
J	–	–	–	-210 to -40°C	(*3)	(*3)	(*3)
	0 to 750°C	±0.5°C or ±0.25% of measured temperature, whichever is greater	±0.07°C or ±0.02% of measured temperature, whichever is greater	-40 to 750°C	±0.5°C or ±0.25% of measured temperature, whichever is greater	±0.06°C or ±0.02% of measured temperature, whichever is greater	±5.625°C
	–	–	–	750 to 1200°C	(*3)	(*3)	(*3)
T	–	–	–	-270 to -200°C	(*3)	(*3)	(*3)
				-200 to 0°C	±0.5°C or ±0.5% of measured temperature, whichever is greater	±0.06°C or ±0.1% of measured temperature, whichever is greater	±6.0°C
	0 to 350°C	±0.5°C or ±0.25% of measured temperature, whichever is greater	±0.07°C or ±0.02% of measured temperature, whichever is greater	0 to 350°C	±0.5°C or ±0.25% of measured temperature, whichever is greater	±0.06°C or ±0.02% of measured temperature, whichever is greater	±2.625°C
	–	–	–	350 to 400°C	(*3)	(*3)	(*3)
N	Not applicable			-270 to -200°C	(*3)	(*3)	(*3)
				-200 to 0°C	±0.5°C or ±0.5% of measured temperature, whichever is greater	±0.06°C or ±0.2% of measured temperature, whichever is greater	±11.0°C
				0 to 1250°C	±0.5°C or ±0.25% of measured temperature, whichever is greater	±0.06°C or ±0.02% of measured temperature, whichever is greater	±9.375°C
				1250 to 1300°C	(*3)	(*3)	(*3)

*2: When a value outside the stated measured temperature range is input from the thermocouple, the value is treated as the maximum/minimum value of the measured temperature range.
*3: The temperature is measurable, but the accuracy is not guaranteed.

●Program precautions

1) With A1S68TD and Q68TD-G-H02/Q68TD-G-H01, the input/output signals (X, Y) and buffer memory address assignments differ. The sequence program needs to be changed.
2) Q68TD-G-H01 has a faster conversion speed than A1S68TD. As a result, the possibility exists that noise not introduced in A1S68TD will be introduced as analog signals in Q68TD-G-H01. In such a case, use an averaging processing function to remove the impact of the noise
3) The thermocouple type set using a DIP switch with A1S68TD is set using the intelligent function module switch with Q68TD-G-H01/A68TD-G-H02.

2) ERNT-ASQT62RD Terminal block (20P)→Terminal block (18P)

Conversion adapter model	MELSEC-AnS series module model	No. of channels	MELSEC-Q series module model
ERNT-ASQT62RD	A1S62RD3	2 channels	Q64RD
	A1S62RD3N		
	A1S62RD4		
	A1S62RD4N		

With A1S62RD3/RD3N→Q64RD

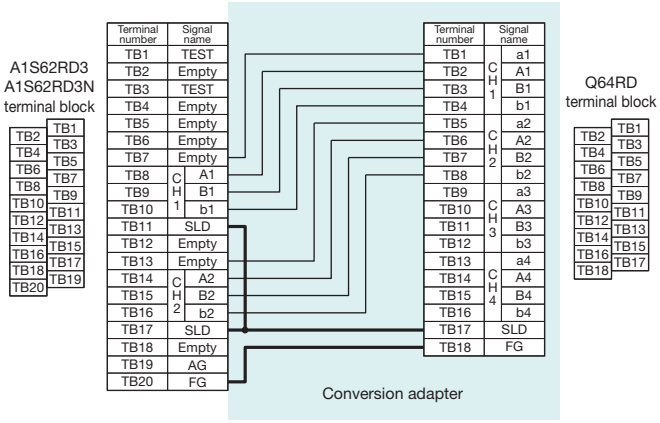

With A1S62RD4/RD4N→Q64RD

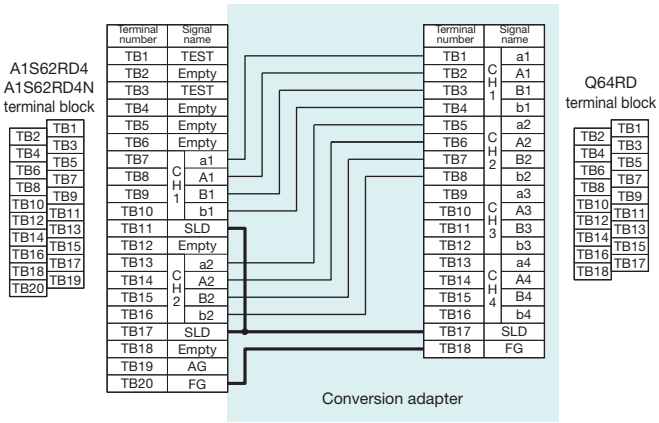

Notes
1. When replacing a four-line module (A1S62RD4, A1S62RD4N), be sure to remove the wiring between the terminals below.
   1) When using 1 channel only ····· Wiring between terminal b1 (TB10) ↔ terminal b2 (TB16)
   2) When using 2 channels ····· Wiring between terminal b1 (TB10) ↔ terminal a2 (TB13)

   If the wiring is left connected, the correct temperature cannot be measured.
2. Ground the FG terminal (TB18) of Q64RD using the FG terminal (TB20) of A1S62RD3/A1S62RD4/A1S62RD3N/A1S62RD4N.
3. The Q64RD side does not have an AG terminal. The wiring connected to the AG terminal (TB19) on the MELSEC-AnS side, therefore, is not required. However, leaving the connection as is causes no problem because those wires are not connected in the conversion adapter.

[Specification comparison chart]

Specification \ Model		MELSEC-AnS series				MELSEC-Q series
		A1S62RD3	A1S62RD4	A1S62RD3N	A1S62RD4N	Q64RD
Measurement method		3-wire type	4-wire type	3-wire type	4-wire type	3-wire type / 4-wire type
Applicable platinum RTD		Pt100 (JIS C 1604-1989, DIN 43760-1980) JPt100 (JIS C 1604-1981)		Pt100 (JIS C 1604-1989, DIN 43760-1980, JIS C 1604-1997, IEC 751-am2) JPt100 (JIS C 1604-1981)		Pt100 (JIS C 1604-1997, IEC 751 1983) JPt100 (JIS C 1604-1981)
Output current for temperature detection		4.2mA (MIN) 4.7mA (MAX)		1mA		1mA
Measured temperature range	Pt100	-180 to 600°C				-200 to 850°C
	JPt100	-180 to 600°C				-180 to 600°C
Range switching	Pt100	–				-20 to 120°C/-200 to 850°C
	JPt100	–				-20 to 120°C/-180 to 600°C
Output (temperature conversion value)		16-bit signed binary (-1800 to 6000: Value to first decimal place × 10) 32-bit signed binary (-180000 to 600000: Value to third decimal place × 1000)				16-bit signed binary (-2000 to 8500: Value to first decimal place × 10) 32-bit signed binary (-200000 to 850000: Value to third decimal place × 1000)
Accuracy		±1% (Accuracy to full scale)				Ambient temperature 0 to 55°C: ±0.25% [Accuracy to maximum value (*1)] Ambient temperature 24±5°C: ±0.08% [Accuracy to maximum value (*1)]
Resolution		0.025°C				
Conversion speed		40ms/channel				
No. of temperature input points		2 channels/module				4 channels/module
Disconnection detection		Detected per channel	Detection for all channels	Detected per channel	Detection for all channels	Detected per channel
Isolation method	Between platinum RTD input and programmable controller power supply	Photocoupler isolation				
	Between platinum RTD input and channel	Non-isolated				
No. of occupied I/O points		32 points				16 points
Connection method		20-point terminal block				18-point terminal block
Internal current consumption (5VDC)		0.54A	0.44A	0.49A	0.39A	0.60A

*1: Maximum value of set range.

Notes
4. For ▭ areas, verify that the MELSEC-Q series module specifications satisfy the specifications of the connected device/equipment.
5. For detailed and general specifications not described in the specification comparison chart, refer to the user's manual of the module used. Note that the areas where the specifications differ between the MELSEC-AnS series and the MELSEC-Q series are restricted in terms of specifications during replacement. Verify the specifications of the connected devices.

●Program precautions
With A1S62RD3/A1S62RD4/A1S62RD3N/A1S62RD4N and Q64RD, the input/output signals (X, Y) and buffer memory address assignments differ. The sequence program needs to be changed.

Point

The compliance standards of the applicable platinum RTD are different from those of the MELSEC-AnS series module. Use an RTD that can be used with Q64RD.

MELSEC-AnS series module	Platinum RTD		
	RTD applicable to Q64RD	RTD not applicable to Q64RD	
A1S62RD3/A1S62RD4	JPt100 (JIS C 1604-1981)	Pt100 (JIS C 1604-1989, DIN 43760-1980)	Needs to be changed to the applicable Q64RD platinum RTD.
A1S62RD3N/A1S63RD4N	Pt100 (JIS C 1604-1997), JPt100 (JIS C 1604-1981)	Pt100 (JIS C 1604-1989, DIN 43760-1980, IEC 751-am2)	

For Temperature Control Modules

1-slot type

1) ERNT-ASQT64TCTT Terminal block (20P)→Terminal block (18P)

Conversion adapter model	MELSEC-AnS series module model	No. of channels	MELSEC-Q series module model
ERNT-ASQT64TCTT	A1S64TCTT-S1	4 channels	Q64TCTTN
	A1S64TCTRT (standard control, thermocouple)		

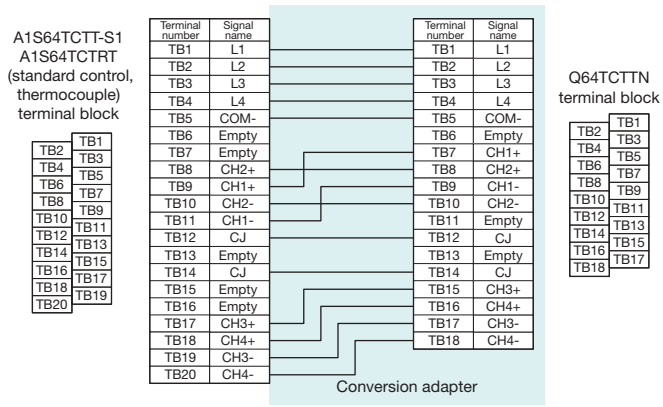

Notes
1. If the cold junction temperature compensation resistor (CJ) connected to the MELSEC-AnS series module terminal block (TB12, TB14) contacts a neighboring module, replace it with the cold junction temperature compensation resistor (CJ) provided with this product.
If the cold junction temperature compensation resistor (CJ) does not contact a neighboring module, replacement with the cold junction temperature compensation resistor (CJ) provided with this product is not required.

[Specification comparison chart]

Specification \ Model			MELSEC-AnS series		MELSEC-Q series
			A1S64TCTT-S1	A1S64TCTRT (Under standard control)	Q64TCTTN (Under standard control)
Control output			Transistor output		
No. of temperature input points			4 channels		
Applicable thermocouples			See Table 1 on the following page.		
Accuracy	Indication precision	Ambient temperature: 23℃±5℃	Full scale × (±0.3%) ±1 digit	–	
		Ambient temperature: 25℃±5℃	–	Full scale × (±0.3%) ±1 digit	Full scale × (±0.3%)
		Ambient temperature: 0℃ to 55℃	Full scale × (±0.7%) ±1 digit		Full scale × (±0.7%)
	Cold junction temperature compensation accuracy (Ambient temperature: 0℃ to 55℃)	Measured temperature value: -100℃ or higher	Within ±1.0℃		
		Measured temperature value: -150℃ to -100℃	Within ±2.0℃		
		Measured temperature value: -200℃ to -150℃	Within ±3.0℃		
Sampling cycle			500ms / 4 channels (constant regardless of the number of used channels)		
Control output cycle			1 to 100s		
Impact per 1Ω wiring resistance			See Table 1 on the following page		
Input impedance			1MΩ		
Input filter			0 to 100s (0: Input filter OFF)		
Sensor correction value setting			Software version A: -5.00 to 5.00% Software version B or later: -50.00 to 50.00%	-50.00 to 50.00%	
Operation during sensor input disconnection			Upscale processing		
Temperature control method			PID ON/OFF pulse or 2-position control		
PID constant range	PID constant setting		Configurable by auto-tuning	Configurable by auto-tuning and self-tuning	Configurable by auto-tuning
	Proportional band (P)		0.0 to 1000.0% (0: 2-position control)		
	Integral time (I)		1 to 3600s		0 to 3600s (0: P control, PD control)
	Derivative time (D)		0 to 3600s (0: PI control)		0 to 3600s (0: P control, PI control)
Target value setting range			Within the temperature range set by the used temperature sensor		
Dead zone setting range			0.1 to 10.0%		
Transistor output	Output signal		ON/OFF pulse		
	Rated load voltage		10.2 to 30VDC		10 to 30VDC
	Maximum load current		0.1A/point, 0.4A/common		
	Maximum inrush current		0.4A 10ms		
	Leakage current at OFF		0.1mA or less		
	Maximum voltage drop at ON		1.0VDC (TYP) 0.1A, 2.5VDC (MAX) 0.1 A		
	Response time		OFF→ON: 2ms or less ON→OFF: 2ms or less		
Isolation method			Between input and ground: Transformer insulation Between input and channel: Transformer insulation	Between input terminal and programmable controller power supply: Transformer insulation Between input channels: Transformer insulation	
No. of occupied I/O points			32 points		16 points
Connection method			20-point terminal block		18-point terminal block
Internal current consumption (5VDC)			0.33A		0.29A

Table 1 Applicable Thermocouples and Impact per 1Ω Wiring Resistance

Thermocouple type	°C					°F				
	Measured temperature range	Data resolution	Impact per 1Ω wiring resistance			Measured temperature range	Data resolution	Impact per 1Ω wiring resistance		
			A1S64TCTT-S1	A1S64TCTRT	Q64TCTTN			A1S64TCTT-S1	A1S64TCTRT	Q64TCTTN
R	0 to 1700	1	0.35μV/Ω	0.15μV/Ω	0.030 (°C/Ω)	0 to 3000	1	0.35μV/Ω	0.15μV/Ω	0.054 (°F/Ω)
K	0 to 500 0 to 800 0 to 1300	1			0.005 (°C/Ω)	0 to 1000 0 to 2400	1			0.008 (°F/Ω)
	-200.0 to 400.0 0.0 to 400.0 0.0 to 500.0 0.0 to 800.0	0.1				0.0 to 1000.0	0.1			
J	0 to 500 0 to 800 0 to 1200	1			0.003 (°C/Ω)	0 to 1000 0 to 1600 0 to 2100	1			0.006 (°F/Ω)
	0.0 to 400.0 0.0 to 500.0 0.0 to 800.0	0.1				0.0 to 1000.0	0.1			
T	-200 to 400 -200 to 200 0 to 200 0 to 400	1			0.004 (°C/Ω)	0 to 700 -300 to 400	1			0.008 (°F/Ω)
	-200.0 to 400.0 0.0 to 400.0	0.1				0.0 to 700.0	0.1			
S	0 to 1700	1			0.030 (°C/Ω)	0 to 3000	1			0.054 (°F/Ω)
B (*1)	MELSEC-AnS series module: 400 to 1800 MELSEC-Q series module: 0 to 1800	1			0.038 (°C/Ω)	MELSEC-AnS series module: 800 to 3000 MELSEC-Q series module: 0 to 3000	1			0.068 (°F/Ω)
E	0 to 400 0 to 1000	1			0.003 (°C/Ω)	0 to 1800	1			0.005 (°F/Ω)
	0.0 to 700.0	0.1				–	–			–
N	0 to 1300	1			0.006 (°C/Ω)	0 to 2300	1			0.011 (°F/Ω)
U	0 to 400 -200 to 200	1			0.004 (°C/Ω)	0 to 700 -300 to 400	1			0.009 (°F/Ω)
	0.0 to 600.0	0.1				–	–			–
L	0 to 400 0 to 900	1			0.003 (°C/Ω)	0 to 800 0 to 1600	1			0.006 (°F/Ω)
	0.0 to 400.0 0.0 to 900.0	0.1				–	–			–
PLII	0 to 1200	1			0.005 (°C/Ω)	0 to 2300	1			0.010 (°F/Ω)
W5Re /W26Re	0 to 2300	1			0.017 (°C/Ω)	0 to 3000	1			0.021 (°F/Ω)

*1: The measured temperature range differs for the MELSEC-AnS series module and MELSEC-Q series module. With the MELSEC-Q series module, temperature measurement is possible with ranges less than 400°C / less than 800°F, but accuracy is not guaranteed.

●Program precautions
With the AnS series module and Q series module, the input/output signals (X, Y) and buffer memory address assignments differ. The sequence program needs to be changed.

2) ERNT-ASQT64TCRT Terminal block (20P)→Terminal block (18P)

Conversion adapter model	MELSEC-AnS series module model	No. of channels	MELSEC-Q series module model
ERNT-ASQT64TCRT	A1S64TCRT-S1 A1S64TCTRT (standard control, platinum RTD)	4 channels	Q64TCRTN

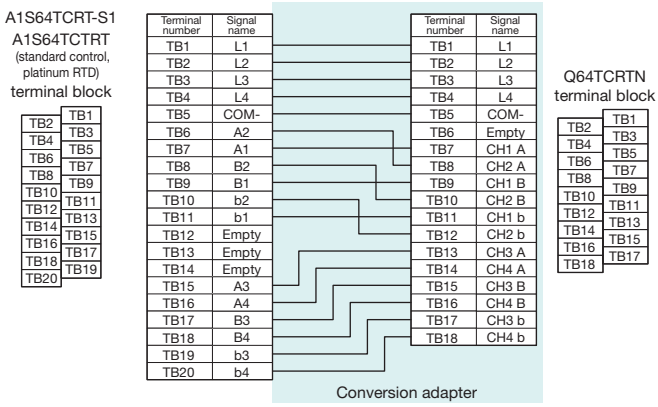

[Specification comparison chart]

Specification \ Model		MELSEC-AnS series		MELSEC-Q series
		A1S64TCRT-S1	A1S64TCTRT (Under standard control)	Q64TCRTN (Under standard control)
Control output		Transistor output		
No. of temperature input points		4 channels		
Applicable platinum RTDs		See Table 2		
Indication precision	Ambient temperature: 23°C±5°C	Full scale × (±0.3%) ±1 digit	–	
	Ambient temperature: 25°C±5°C	–	Full scale × (±0.3%) ±1 digit	Full scale × (±0.3%)
	Ambient temperature: 0°C to 55°C	Full scale × (±0.7%) ±1 digit		Full scale × (±0.7%)
Sampling cycle		500ms / 4 channels (constant regardless of the number of used channels)		
Control output cycle		1 to 100s		
Sensor current		Approx. 0.25mA	Approx. 0.3mA	–
Impact of allowable input conductor resistance		20Ω or less	10Ω or less	–
Input impedance		–		1MΩ
Input filter		0 to 100s (0: Input filter OFF)		
Sensor correction value setting		Software version A: -5.00 to 5.00% Software version B or later: -50.00 to 50.00%	-0.00 to 50.00%	-50.00 to 50.00%
Operation during sensor input disconnection		Upscale processing		
Operation during sensor input short circuit		–	Downscale processing	–
Temperature control method		PID ON/OFF pulse or 2-position control		
PID constant range	PID constant setting	Configurable by auto-tuning	Configurable by auto-tuning and self-tuning	Configurable by auto-tuning
	Proportional band (P)	0.0 to 1000.0% (0: 2-position control)		
	Integral time (I)	1 to 3600s		0 to 3600s (0: P control, PD control)
	Derivative time (D)	0 to 3600s (0: PI control)		0 to 3600s (0: P control, PI control)
Target value setting range		Within the temperature range set by the used temperature sensor		
Dead zone setting range		0.1 to 10.0%		
Transistor output	Output signal	ON/OFF pulse		
	Rated load voltage	10.2 to 30VDC		10 to 30VDC
	Maximum load current	0.1A/point, 0.4A/common		
	Maximum inrush current	0.4A 10ms		
	Leakage current at OFF	0.1mA or less		
	Maximum voltage drop at ON	1.0VDC (TYP) 0.1A, 2.5VDC (MAX) 0.1A		
	Response time	OFF→ON: 2ms or less ON→OFF: 2ms or less		
Isolation method		Between input and ground: Transformer insulation Between input and channel: Transformer insulation	Between input terminal and programmable controller power supply: Transformer insulation Between input channels: Transformer insulation	
No. of occupied I/O points		32 points		16 points
Connection method		20-point terminal block		18-point terminal block
Internal current consumption (5VDC)		0.33A		0.29A

Table 2 Applicable Platinum RTDs

Platinum RTD type	°C		°F	
	Measured temperature range	Data resolution	Measured temperature range	Data resolution
Pt100	-200.0 to 600.0	0.1	-300 to 1100	1
	-200.0 to 200.0		-300.0 to 300.0	0.1
JPt100	-200.0 to 500.0	0.1	-300 to 900	1
	-200.0 to 200.0		-300.0 to 300.0	0.1

●Program precautions
With the AnS series module and Q series module, the input/output signals (X, Y) and buffer memory address assignments differ. The sequence program needs to be changed.

3) ERNT-ASQT62TCTT Terminal block (20P)→Terminal block (18P)

Conversion adapter model	MELSEC-AnS series module model	No. of channels	MELSEC-Q series module model
ERNT-ASQT62TCTT	A1S62TCTT-S2 A1S64TCTRT (heating and cooling control, thermocouple)	2 channels	Q64TCTTN

For A1S62TCTT-S2 → Q64TCTTN

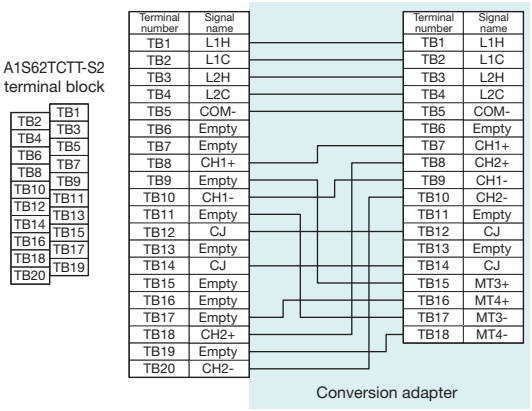

For A1S64TCTRT → Q64TCTTN

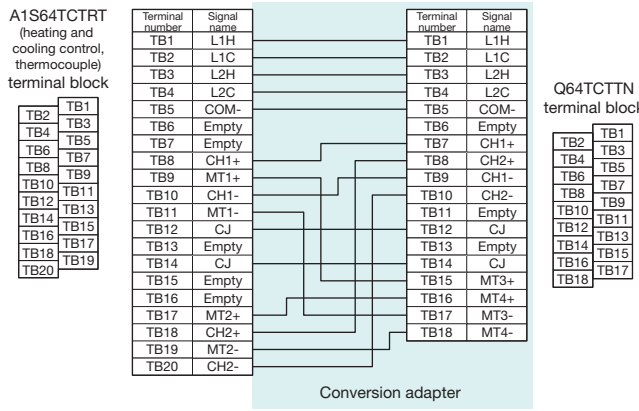

Notes
1. If the cold junction temperature compensation resistor (CJ) connected to the MELSEC-AnS series module terminal block (TB12, TB14) contacts a neighboring module, replace it with the cold junction temperature compensation resistor (CJ) provided with this product.
   If the cold junction temperature compensation resistor (CJ) does contact a neighboring module, replacement with the cold junction temperature compensation resistor (CJ) provided with this product is not required.

[Specification comparison chart]

Specification \ Model			MELSEC-AnS series		MELSEC-Q series
			A1S62TCTT-S2	A1S64TCTRT (Under heating and cooling control)	Q64TCTTN (Under heating and cooling control)
Control output			Transistor output		
No. of temperature input points			2 channels		
Applicable thermocouples			See Table 3 on the following page		
Accuracy	Indication precision	Ambient temperature: 23°C±5°C	Full scale × (±0.3%) ±1 digit	–	
		Ambient temperature: 25°C±5°C	–	Full scale × (±0.3%) ±1 digit	Full scale × (±0.3%)
		Ambient temperature: 0°C to 55°C	Full scale × (±0.7%) ±1 digit		Full scale × (±0.7%)
	Cold junction temperature compensation accuracy (Ambient temperature: 0°C to 55°C)	Measured temperature value: -100°C or higher	Within ±1.0°C		
		Measured temperature value: -150°C to -100°C	Within ±2.0°C		
		Measured temperature value: -200°C to -150°C	Within ±3.0°C		
Sampling cycle			500ms / 2 channels (constant regardless of the number of used channels)		
Heating control output cycle			1 to 100s		
Cooling control output cycle					
Impact per 1Ω wiring resistance			See Table 3 on the following page.		
Input impedance			1MΩ		
Input filter			0 to 100s (0: Input filter OFF)		
Sensor correction value setting			-50.00 to 50.00%		
Operation during sensor input disconnection			Upscale processing		
Temperature control method			PID ON/OFF pulse		PID ON/OFF pulse or 2-position control
PID constant range	PID constant setting		Configurable by auto-tuning		
	Proportional band (P)		–	0.1 to 1000.0%	0.0 to 1000.0% (0: 2-position control)
	Heating proportional band (Ph)		0.1 to 1000.0%	–	
	Cooling proportional band (Pc)				
	Integral time (I)		1 to 3600s		0 to 3600s (0: P control, PD control)
	Derivative time (D)		0 to 3600s (0: PI control)		0 to 3600s (0: P control, PI control)
Target value setting range			Within the temperature range set by the used temperature sensor		
Dead zone setting range			Air cooling / Water cooling		Air cooling / Water cooling / Linear
Transistor output	Output signal		ON/OFF pulse		
	Rated load voltage		10.2 to 30VDC		10 to 30VDC
	Maximum load current		0.1A/point, 0.4A/common		
	Maximum inrush current		0.4A 10ms		
	Leakage current at OFF		0.1mA or less		
	Maximum voltage drop at ON		1.0VDC (TYP) 0.1A, 2.5VDC (MAX) 0.1A		
	Response time		OFF→ON: 2ms or less ON→OFF: 2ms or less		
Isolation method			Between input and ground: Transformer insulation Between input and channel: Transformer insulation	Between input terminal and programmable controller power supply: Transformer insulation Between input channels: Transformer insulation	
No. of occupied I/O points			32 points		16 points
Connection method			20-point terminal block		18-point terminal block
Internal current consumption (5VDC)			0.19A	0.33A	0.29A

Table 3 Applicable Thermocouples and Impact per 1Ω Wiring Resistance

Thermocouple type	°C					°F				
	Measured temperature range	Data resolution	Impact per 1Ω wiring resistance			Measured temperature range	Data resolution	Impact per 1Ω wiring resistance		
			A1S62TCTT-S2	A1S64TCTRTW	Q64TCTTN			A1S62TCTT-S2	A1S64TCTRT	Q64TCTTN
R	0 to 1700	1	0.35μV/Ω	0.15μV/Ω	0.030 (°C/Ω)	0 to 3000	1	0.35μV/Ω	0.15μV/Ω	0.054 (°F/Ω)
K	0 to 500 0 to 800 0 to 1300	1			0.005 (°C/Ω)	0 to 1000 0 to 2400	1			0.008 (°F/Ω)
	-200.0 to 400.0 0.0 to 400.0 0.0 to 500.0 0.0 to 800.0	0.1				0.0 to 1000.0	0.1			
J	0 to 500 0 to 800 0 to 1200	1			0.003 (°C/Ω)	0 to 1000 0 to 1600 0 to 2100	1			0.006 (°F/Ω)
	0.0 to 400.0 0.0 to 500.0 0.0 to 800.0	0.1				0.0 to 1000.0	0.1			
T	-200 to 400 -200 to 200 0 to 200 0 to 400	1			0.004 (°C/Ω)	0 to 700 -300 to 400	1			0.008 (°F/Ω)
	-200.0 to 400.0 0.0 to 400.0	0.1				0.0 to 700.0	0.1			
S	0 to 1700	1			0.030 (°C/Ω)	0 to 3000	1			0.054 (°F/Ω)
B (*1)	MELSEC-AnS series module: 400 to 1800 MELSEC-Q series module: 0 to 1800	1			0.038 (°C/Ω)	MELSEC-AnS series module: 800 to 3000 MELSEC-Q series module: 0 to 3000	1			0.068 (°F/Ω)
E	0 to 400 0 to 1000	1			0.003 (°C/Ω)	0 to 1800	1			0.005 (°F/Ω)
	0.0 to 700.0	0.1				–	–			–
N	0 to 1300	1			0.006 (°C/Ω)	0 to 2300	1			0.011 (°F/Ω)
U	0 to 400 -200 to 200	1			0.004 (°C/Ω)	0 to 700 -300 to 400	1			0.009 (°F/Ω)
	0.0 to 600.0	0.1				–	–			–
L	0 to 400 0 to 900	1			0.003 (°C/Ω)	0 to 800 0 to 1600	1			0.006 (°F/Ω)
	0.0 to 400.0 0.0 to 900.0	0.1				–	–			–
PLII	0 to 1200	1			0.005 (°C/Ω)	0 to 2300	1			0.010 (°F/Ω)
W5Re /W26Re	0 to 2300	1			0.017 (°C/Ω)	0 to 3000	1			0.021 (°F/Ω)

*1: The measured temperature range differs for the MELSEC-AnS series module and MELSEC-Q series module. With the MELSEC-Q series module, temperature measurement is possible with ranges less than 400°C / less than 800°F, but accuracy is not guaranteed.

●Program precautions
With the AnS series module and Q series module, the input/output signals (X, Y) and buffer memory address assignments differ. The sequence program needs to be changed.

4) ERNT-ASQT62TCRT Terminal block (20P)→Terminal block (18P)

Conversion adapter model	MELSEC-AnS series module model	No. of channels	MELSEC-Q series module model
ERNT-ASQT62TCRT	A1S62TCRT-S2	2 channels	Q64TCRTN
	A1S64TCTRT (heating and cooling control, platinum RTD)		

For A1S62TCRT-S2 → Q64TCRTN

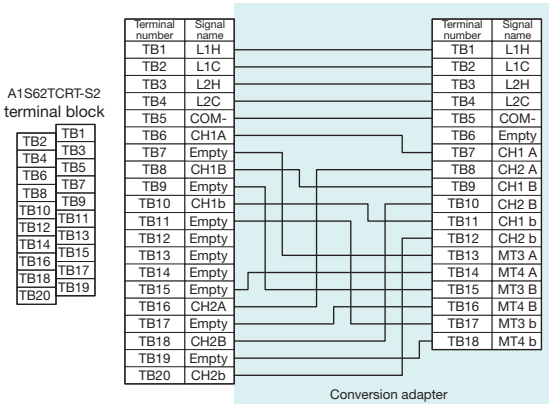

For A1S64TCTRT → Q64TCRTN

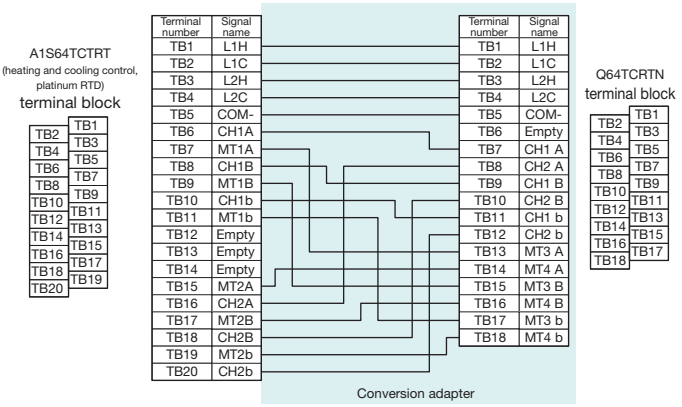

[Specification comparison chart]

Specification \ Model		MELSEC-AnS series		MELSEC-Q series
		A1S62TCRT-S2	A1S64TCTRT (Under heating and cooling control)	Q64TCRTN (Under heating and cooling control)
Control output		Transistor output		
No. of temperature input points		2 channels		
Applicable platinum RTDs		See Table 4		
Indication precision	Ambient temperature: 23℃±5℃	Full scale × (±0.3%) ±1 digit	–	
	Ambient temperature: 25℃±5℃	–	Full scale × (±0.3%) ±1 digit	Full scale × (±0.3%)
	Ambient temperature: 0℃ to 55℃	Full scale × (±0.7%) ±1 digit		Full scale × (±0.7%)
Sampling cycle		500ms / 2 channels (constant regardless of the number of used channels)		
Heating control output cycle		1 to 100s		
Cooling control output cycle				
Sensor current		Approx. 0.25mA	Approx. 0.3mA	–
Impact of allowable input conductor resistance		20Ω or less	10Ω or less	–
Input impedance		–		1MΩ
Input filter		0 to 100s (0: Input filter OFF)		
Sensor correction value setting		-50.00 to 50.00%		
Operation during sensor input disconnection		Upscale processing		
Operation during sensor input short circuit		–	Downscale processing	–
Temperature control method		PID ON/OFF pulse		PID ON/OFF pulse or 2-position control
PID constant range	PID constant setting	Configurable by auto-tuning		
	Proportional band (P)	–	0.1 to 1000.0%	0.0 to 1000.0% (0: 2-position control)
	Heating proportional band (Ph)	0.1 to 1000.0%	–	
	Cooling proportional band (Pc)			
	Integral time (I)	1 to 3600s		0 to 3600s (0: P control, PD control)
	Derivative time (D)	0 to 3600s (0: PI control)		0 to 3600s (0: P control, PI control)
Target value setting range		Within the temperature range set by the used temperature sensor		
Cooling method setting		Air cooling / Water cooling		Air cooling / Water cooling / Linear
Transistor output	Output signal	ON/OFF pulse		
	Rated load voltage	10.2 to 30VDC		10 to 30VDC
	Maximum load current	0.1A/point, 0.4A/common		
	Maximum inrush current	0.4A 10ms		
	Leakage current at OFF	0.1mA or less		
	Maximum voltage drop at ON	1.0VDC (TYP) 0.1A, 2.5VDC (MAX) 0.1 A		
	Response time	OFF→ON: 2ms or less ON→OFF: 2ms or less		
Isolation method		Between input and ground: Transformer insulation Between input and channel: Transformer insulation	Between input terminal and programmable controller power supply: Transformer insulation Between input channels: Transformer insulation	
No. of occupied I/O points		32 points		16 points
Connection method		20-point terminal block		18-point terminal block
Internal current consumption (5VDC)		0.19A	0.33A	0.29A

Table 4 Applicable Platinum RTDs

Platinum RTD type	℃		°F	
	Measured temperature range	Data resolution	Measured temperature range	Data resolution
Pt100	-200.0 to 600.0	0.1	-300 to 1100	1
	-200.0 to 200.0		-300.0 to 300.0	0.1
JPt100	-200.0 to 500.0	0.1	-300 to 900	1
	-200.0 to 200.0		-300.0 to 300.0	0.1

●Program precautions
With the AnS series module and Q series module, the input/output signals (X, Y) and buffer memory address assignments differ. The sequence program needs to be changed.

For Temperature Control Modules with Disconnection Detection Function

1-slot type + Disconnection detection connector conversion cable

1) ERNT-ASQT64TCTTBW Terminal block (20P) + Connector (8P)→Terminal block (18P) × 2

Set model	Conversion adapter model	Disconnection detection connector conversion cable	MELSEC-AnS series module model	No. of channels	MELSEC-Q series module model
ERNT-ASQT64TCTTBW	**ERNT-ASQT64TCTT**	Yes	A1S64TCTTBW-S1	4 channels	Q64TCTTBWN
			A1S64TCTRTBW (standard control, thermocouple)		

Conversion adapter (ERNT-ASQT64TCTT)

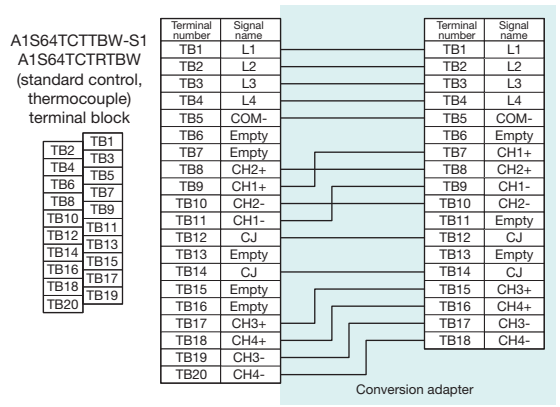

Disconnection detection connector conversion cable

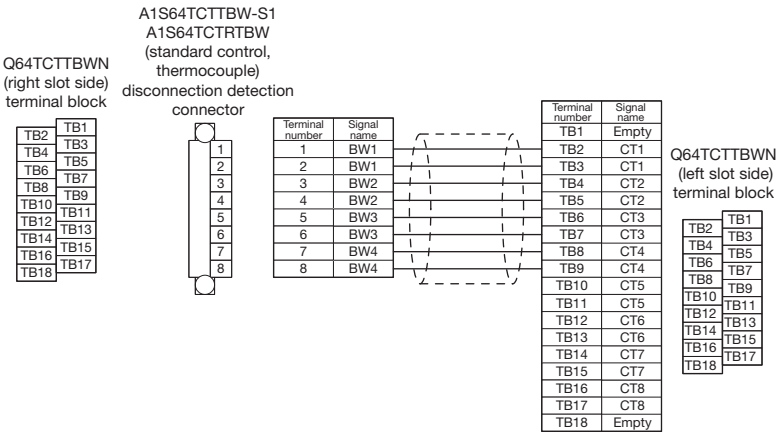

Notes
1. Be sure to install the disconnection detection connector conversion cable on the left side and the conversion adapter on the right side of the MELSEC-Q series module. Use of the module with the cable and adapter installed in the reverse causes MELSEC-Q series module damage.

[Specification comparison chart]

Specification \ Model			MELSEC-AnS series		MELSEC-Q series
			A1S64TCTTBW-S1	A1S64TCTRTBW (Under standard control)	Q64TCTTBWN (Under standard control)
Control output			Transistor output		
No. of temperature input points			4 channels		
Applicable thermocouples			See Table 5 on the following page.		
Accuracy	Indication precision	Ambient temperature: 23°C±5°C	Full scale × (±0.3%) ±1 digit	–	
		Ambient temperature: 25°C±5°C	–	Full scale × (±0.3%) ±1 digit	Full scale × (±0.3%)
		Ambient temperature: 0°C to 55°C	Full scale × (±0.7%) ±1 digit		Full scale × (±0.7%)
	Cold junction temperature compensation accuracy (Ambient temperature: 0°C to 55°C)	Measured temperature value: -100°C or higher	Within ±1.0°C		
		Measured temperature value: -150°C to -100°C	Within ±2.0°C		
		Measured temperature value: -200°C to -150°C	Within ±3.0°C		
Sampling cycle			500ms / 4 channels (constant regardless of the number of used channels)		
Control output cycle			1 to 100s		
Impact per 1Ω wiring resistance			See Table 5 on the following page		
Input impedance			1MΩ		
Input filter			0 to 100s (0: Input filter OFF)		
Sensor correction value setting			Software version A: -5.00 to 5.00% Software version B or later: -50.00 to 50.00%	-50.00 to 50.00%	
Operation during sensor input disconnection			Upscale processing		
Temperature control method			PID ON/OFF pulse or 2-position control		
PID constant range	PID constant setting		Configurable by auto-tuning	Configurable by auto-tuning and self-tuning	Configurable by auto-tuning
	Proportional band (P)		0.0 to 1000.0% (0: 2-position control)		
	Integral time (I)		1 to 3600s		0 to 3600s (0: P control, PD control)
	Derivative time (D)		0 to 3600s (0: PI control)		0 to 3600s (0: P control, PI control)
Target value setting range			Within the temperature range set by the used temperature sensor		
Dead zone setting range			0.1 to 10.0%		
Transistor output	Output signal		ON/OFF pulse		
	Rated load voltage		10.2 to 30VDC		10 to 30VDC
	Maximum load current		0.1A/point, 0.4A/common		
	Maximum inrush current		0.4A 10ms		
	Leakage current at OFF		0.1mA or less		
	Maximum voltage drop at ON		1.0VDC (TYP) 0.1A, 2.5VDC (MAX) 0.1 A		
	Response time		OFF→ON: 2ms or less ON→OFF: 2ms or less		
Isolation method			Between input and ground: Transformer insulation Between input and channel: Transformer insulation	Between input terminal and programmable controller power supply: Transformer insulation Between input channels: Transformer insulation	
Heater disconnection detection specifications	Current sensor		U.R.D., Ltd CTL-12-S36-8 (0.0 to 100.0A) CTL-6-P(-H) (0.00 to 20.00A)		U.R.D., Ltd CTL-12-S36-8 (0.0 to 100.0A) CTL-12-S36-10 (0.0 to 100.0A) CTL-12-S56-10 (0.0 to 100.0A) CTL-6-P(-H) (0.00 to 20.00A)
	Input method		Multiplexer method: A/D conversion		–
	Input accuracy		–	Full-scale × (±1.0%)	
	No. of warning delays		3 to 255		
No. of occupied I/O points			32 points		
Connection method			20-point terminal block + 8-pin connector		18-point terminal block × 2
Internal current consumption (5VDC)			0.42A	0.39A	0.33A

Table 5 Applicable Thermocouples and Impact per 1Ω Wiring Resistance

Thermocouple type	°C					°F				
	Measured temperature range	Data resolution	Impact per 1Ω wiring resistance			Measured temperature range	Data resolution	Impact per 1Ω wiring resistance		
			A1S64TCTTBW-S1	A1S64TCTRTBW	Q64TCTTBWN			A1S64TCTTBW-S1	A1S64TCTRTBW	Q64TCTTBWN
R	0 to 1700	1	0.35μV/Ω	0.15μV/Ω	0.030 (°C/Ω)	0 to 3000	1	0.35μV/Ω	0.15μV/Ω	0.054 (°F/Ω)
K	0 to 500 0 to 800 0 to 1300	1			0.005 (°C/Ω)	0 to 1000 0 to 2400	1			0.008 (°F/Ω)
	-200.0 to 400.0 0.0 to 400.0 0.0 to 500.0 0.0 to 800.0	0.1				0.0 to 1000.0	0.1			
J	0 to 500 0 to 800 0 to 1200	1			0.003 (°C/Ω)	0 to 1000 0 to 1600 0 to 2100	1			0.006 (°F/Ω)
	0.0 to 400.0 0.0 to 500.0 0.0 to 800.0	0.1				0.0 to 1000.0	0.1			
T	-200 to 400 -200 to 200 0 to 200 0 to 400	1			0.004 (°C/Ω)	0 to 700 -300 to 400	1			0.008 (°F/Ω)
	-200.0 to 400.0 0.0 to 400.0	0.1				0.0 to 700.0	0.1			
S	0 to 1700	1			0.030 (°C/Ω)	0 to 3000	1			0.054 (°F/Ω)
B (*1)	MELSEC-AnS series module: 400 to 1800 MELSEC-Q series module: 0 to 1800	1			0.038 (°C/Ω)	MELSEC-AnS series module: 800 to 3000 MELSEC-Q series module: 0 to 3000	1			0.068 (°F/Ω)
E	0 to 400 0 to 1000	1			0.003 (°C/Ω)	0 to 1800	1			0.005 (°F/Ω)
	0.0 to 700.0	0.1				–	–			–
N	0 to 1300	1			0.006 (°C/Ω)	0 to 2300	1			0.011 (°F/Ω)
U	0 to 400 -200 to 200	1			0.004 (°C/Ω)	0 to 700 -300 to 400	1			0.009 (°F/Ω)
	0.0 to 600.0	0.1				–	–			–
L	0 to 400 0 to 900	1			0.003 (°C/Ω)	0 to 800 0 to 1600	1			0.006 (°F/Ω)
	0.0 to 400.0 0.0 to 900.0	0.1				–	–			–
PLII	0 to 1200	1			0.005 (°C/Ω)	0 to 2300	1			0.010 (°F/Ω)
W5Re /W26Re	0 to 2300	1			0.017 (°C/Ω)	0 to 3000	1			0.021 (°F/Ω)

*1: The measured temperature range differs for the MELSEC-AnS series module and MELSEC-Q series module. With the MELSEC-Q series module, temperature measurement is possible with ranges less than 400°C / less than 800°F, but accuracy is not guaranteed.

●Program precautions
With the AnS series module and Q series module, the input/output signals (X, Y) and buffer memory address assignments differ. The sequence program needs to be changed.

2) ERNT-ASQT64TCRTBW Terminal block (20P) + Connector (8P)→Terminal block (18P) × 2

Set model	Conversion adapter model	Disconnection detection connector conversion cable	MELSEC-AnS series module model	No. of channels	MELSEC-Q series module model
ERNT-ASQT64TCRTBW	**ERNT-ASQT64TCRT**	Yes	A1S64TCTTBW-S1 A1S64TCTRTBW (standard control, platinum RTD)	4 channels	Q64TCRTBWN

Conversion adapte (ERNT-ASQT64TCRT)

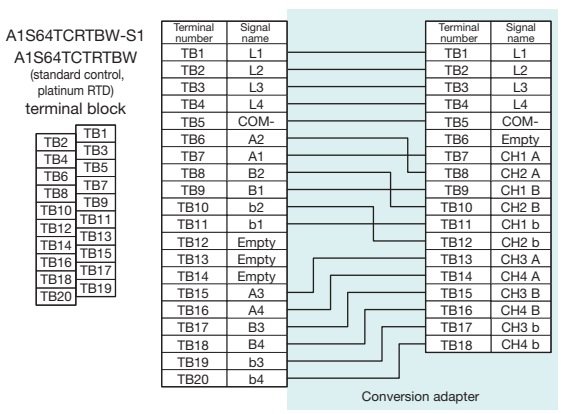

Disconnection detection connector conversion cable

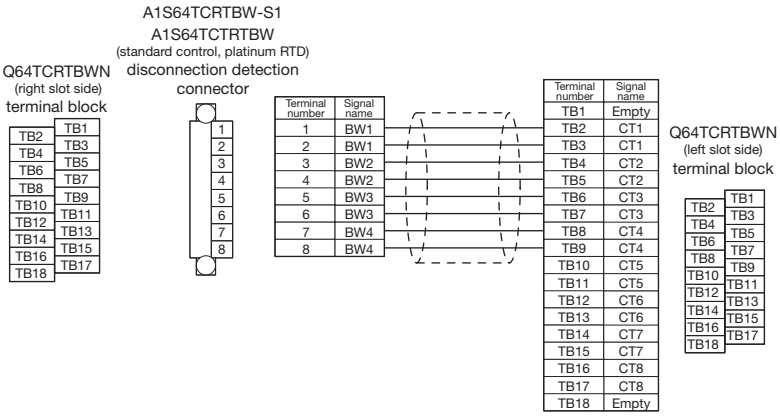

Notes
1. Be sure to install the disconnection detection connector conversion cable on the left side and the conversion adapter on the right side of the MELSEC-Q series module.
   Use of the module with the cable and adapter installed in the reverse causes MELSEC-Q series module damage.

[Specification comparison chart]

Specification \ Model		MELSEC-AnS series		MELSEC-Q series
		A1S64TCRTBW-S1	A1S64TCTRTBW (Under standard control)	Q64TCRTBWN (Under standard control)
Control output		Transistor output		
No. of temperature input points		4 channels		
Applicable platinum RTDs		See Table 6 on the following page.		
Indication precision	Ambient temperature: 23℃±5℃	Full scale × (±0.3%) ±1 digit	–	
	Ambient temperature: 25℃±5℃	–	Full scale × (±0.3%) ±1 digit	Full scale × (±0.3%)
	Ambient temperature: 0℃ to 55℃	Full scale × (±0.7%) ±1 digit		Full scale × (±0.7%)
Sampling cycle		500ms / 4 channels (constant regardless of the number of used channels)		
Control output cycle		1 to 100s		
Sensor current		Approx. 0.25mA	Approx. 0.3mA	–
Impact of allowable input conductor resistance		20Ω or less	10Ω or less	–
Input impedance		–		1MΩ
Input filter		0 to 100s (0: Input filter OFF)		
Sensor correction value setting		Software version A: -5.00 to 5.00% Software version B or later: -50.00 to 50.00%	-50.00 to 50.00%	
Operation during sensor input disconnection		Upscale processing		
Operation during sensor input short circuit		–	Downscale processing	–
Temperature control method		PID ON/OFF pulse or 2-position control		
PID constant range	PID constant setting	Configurable by auto-tuning	Configurable by auto-tuning and self-tuning	Configurable by auto-tuning
	Proportional band (P)	0.0 to 1000.0% (0: 2-position control)		
	Integral time (I)	1 to 3600s		0 to 3600s (0: P control, PD control)
	Derivative time (D)	0 to 3600s (0: PI control)		0 to 3600s (0: P control, PI control)
Target value setting range		Within the temperature range set by the used temperature sensor		
Dead zone setting range		0.1 to 10.0%		
Transistor output	Output signal	ON/OFF pulse		
	Rated load voltage	10.2 to 30VDC		10 to 30VDC
	Maximum load current	0.1A/point, 0.4A/common		
	Maximum inrush current	0.4A 10ms		
	Leakage current at OFF	0.1mA or less		
	Maximum voltage drop at ON	1.0VDC (TYP) 0.1A, 2.5VDC (MAX) 0.1 A		
	Response time	OFF→ON: 2ms or less ON→OFF: 2ms or less		
Isolation method		Between input and ground: Transformer insulation Between input and channel: Transformer insulation	Between input terminal and programmable controller power supply: Transformer insulation Between input channels: Transformer insulation	
Heater disconnection detection specifications	Current sensor	U.R.D., Ltd. CTL-12-S36-8 (0.0 to 100.0A) CTL-6-P(-H) (0.00 to 20.00A)		U.R.D., Ltd. CTL-12-S36-8 (0.0 to 100.0A) CTL-12-S36-10 (0.0 to 100.0A) CTL-12-S56-10 (0.0 to 100.0A) CTL-6-P(-H) (0.00 to 20.00A)
	Input method	Multiplexer method: A/D conversion		–
	Input accuracy	–	Full scale × (±1.0%)	
	No. of warning delays	3 to 255		
No. of occupied I/O points		32 points		
Connection method		20-point terminal block + 8-pin connector		18-point terminal block × 2
Internal current consumption (5VDC)		0.42A	0.39A	0.33A

Table 6 Applicable Platinum RTDs

Platinum RTD type	°C		°F	
	Measured temperature range	Data resolution	Measured temperature range	Data resolution
Pt100	-200.0 to 600.0	0.1	-300 to 1100	1
	-200.0 to 200.0		-300.0 to 300.0	0.1
JPt100	-200.0 to 500.0	0.1	-300 to 900	1
	-200.0 to 200.0		-300.0 to 300.0	0.1

•Program precautions
With the AnS series module and Q series module, the input/output signals (X, Y) and buffer memory address assignments differ. The sequence program needs to be changed.

3) ERNT-ASQT62TCTTBW Terminal block (20P) + Connector (8P)→Terminal block (18P) × 2

Set model	Conversion adapter model	Disconnection detection connector conversion cable	MELSEC-AnS series module model	No. of channels	MELSEC-Q series module model
ERNT-ASQT62TCTTBW	**ERNT-ASQT62TCTT**	Yes	A1S62TCTTBW-S2	2 channels	Q64TCTTBWN
			A1S64TCTRTBW (heating and cooling control, thermocouple)		

Conversion adapter (ERNT-ASQT62TCTT)

With A1S62TCTTBW-S2→Q64TCTTBWN

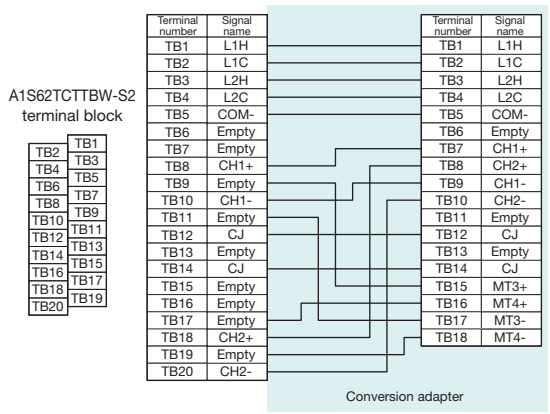

With A1S64TCTRTBW→Q64TCTTBWN

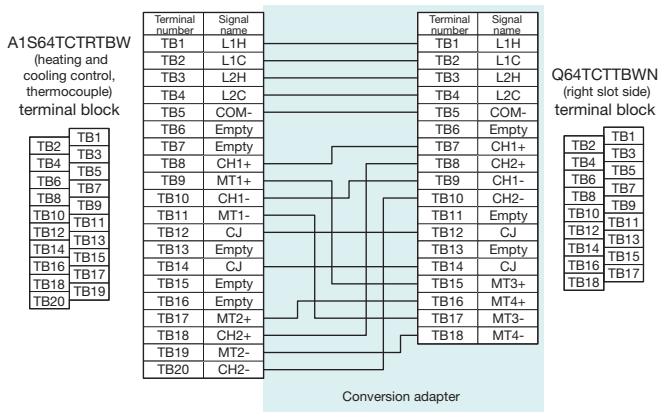

Disconnection detection connector conversion cable

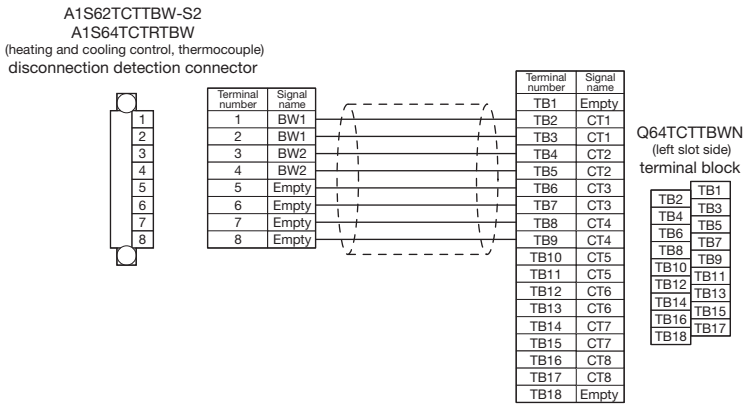

Notes
1. Be sure to install the disconnection detection connector conversion cable on the left side and the conversion adapter on the right side of the MELSEC-Q series module.
Use of the module with the cable and adapter installed in the reverse causes MELSEC-Q series module damage.

[Specification comparison chart]

Specification \ Model			MELSEC-AnS series		MELSEC-Q series
			A1S62TCTTBW-S2	A1S64TCTRTBW (Under heating and cooling control)	Q64TCTTBWN (Under heating and cooling control)
Control output			Transistor output		
No. of temperature input points			2 channels		
Applicable thermocouples			See Table 7 on the following page.		
Accuracy	Indication precision	Ambient temperature: 23°C±5°C	Full scale × (±0.3%) ±1 digit	–	
		Ambient temperature: 25°C±5°C	–	Full scale × (±0.3%) ±1 digit	Full scale × (±0.3%)
		Ambient temperature: 0°C to 55°C	Full scale × (±0.7%) ±1 digit		Full scale × (±0.7%)
	Cold junction temperature compensation accuracy (Ambient temperature: 0°C to 55°C)	Measured temperature value: -100°C or higher	Within ±1.0°C		
		Measured temperature value: -150°C to -100°C	Within ±2.0°C		
		Measured temperature value: -200°C to -150°C	Within ±3.0°C		
Sampling cycle			500ms / 2 channels (constant regardless of the number of used channels)		
Heating control output cycle			1 to 100s		
Cooling control output cycle					
Impact per 1Ω wiring resistance			See Table 7 on the following page.		
Input impedance			1MΩ		
Input filter			0 to 100s (0: Input filter OFF)		
Sensor correction value setting			-50.00 to 50.00%		
Operation during sensor input disconnection			Upscale processing		
Temperature control method			PID ON/OFF pulse		PID ON/OFF pulse or 2-position control
PID constant range	PID constant setting		Configurable by auto-tuning		
	Proportional band (P)		–	0.1 to 1000.0%	0.0 to 1000.0% (0: 2-position control)
	Heating proportional band (Ph)		0.1 to 1000.0%	–	
	Cooling proportional band (Pc)				
	Integral time (I)		1 to 3600s		0 to 3600s (0: P control, PD control)
	Derivative time (D)		0 to 3600s (0: PI control)		0 to 3600s (0: P control, PI control)
Target value setting range			Within the temperature range set by the used temperature sensor		
Cooling method setting			Air cooling / Water cooling		Air cooling / Water cooling / Linear
Transistor output	Output signal		ON/OFF pulse		
	Rated load voltage		10.2 to 30VDC		10 to 30VDC
	Maximum load current		0.1A/point, 0.4A/common		
	Maximum inrush current		0.4A 10ms		
	Leakage current at OFF		0.1mA or less		
	Maximum voltage drop at ON		1.0VDC (TYP) 0.1A, 2.5VDC (MAX) 0.1 A		
	Response time		OFF→ON: 2ms or less ON→OFF: 2ms or less		
Isolation method			Between input and ground: Transformer insulation Between input and channel: Transformer insulation	Between input terminal and programmable controller power supply: Transformer insulation Between input channels: Transformer insulation	
Heater disconnection detection specifications	Current sensor		U.R.D., Ltd. CTL-12-S36-8 (0.0 to 100.0A) CTL-6-P(-H) (0.00 to 20.00A)		U.R.D., Ltd. CTL-12-S36-8 (0.0 to 100.0A) CTL-12-S36-10 (0.0 to 100.0A) CTL-12-S56-10 (0.0 to 100.0A) CTL-6-P(-H) (0.00 to 20.00A)
	Input method		Multiplexer method: A/D conversion		–
	Input accuracy		–	Full-scale × (±1.0%)	
	No. of warning delays		3 to 255		
No. of occupied I/O points			32 points		
Connection method			20-point terminal block + 8-pin connector		18-point terminal block × 2
Internal current consumption (5VDC)			0.28A	0.39A	0.33A

Table 7 Applicable Thermocouples and Impact per 1Ω Wiring Resistance

Thermocouple type	°C					°F				
	Measured temperature range	Data resolution	Impact per 1Ω wiring resistance			Measured temperature range	Data resolution	Impact per 1Ω wiring resistance		
			A1S62TCTTBW-S2	A1S64TCTRTBW	Q64TCTTBWN			A1S62TCTTBW-S2	A1S64TCTRTBW	Q64TCTTBWN
R	0 to 1700	1	0.35μV/Ω	0.15μV/Ω	0.030 (°C/Ω)	0 to 3000	1	0.35μV/Ω	0.15μV/Ω	0.054 (°F/Ω)
K	0 to 500 0 to 800 0 to 1300	1			0.005 (°C/Ω)	0 to 1000 0 to 2400	1			0.008 (°F/Ω)
	-200.0 to 400.0 0.0 to 400.0 0.0 to 500.0 0.0 to 800.0	0.1				0.0 to 1000.0	0.1			
J	0 to 500 0 to 800 0 to 1200	1			0.003 (°C/Ω)	0 to 1000 0 to 1600 0 to 2100	1			0.006 (°F/Ω)
	0.0 to 400.0 0.0 to 500.0 0.0 to 800.0	0.1				0.0 to 1000.0	0.1			
T	-200 to 400 -200 to 200 0 to 200 0 to 400	1			0.004 (°C/Ω)	0 to 700 -300 to 400	1			0.008 (°F/Ω)
	-200.0 to 400.0 0.0 to 400.0	0.1				0.0 to 700.0	0.1			
S	0 to 1700	1			0.030 (°C/Ω)	0 to 3000	1			0.054 (°F/Ω)
B (*1)	MELSEC-AnS series module: 400 to 1800 MELSEC-Q series module: 0 to 1800	1			0.038 (°C/Ω)	MELSEC-AnS series module: 800 to 3000 MELSEC-Q series moduled: 0 to 3000	1			0.068 (°F/Ω)
E	0 to 400 0 to 1000	1			0.003 (°C/Ω)	0 to 1800	1			0.005 (°F/Ω)
	0.0 to 700.0	0.1				–	–			–
N	0 to 1300	1			0.006 (°C/Ω)	0 to 2300	1			0.011 (°F/Ω)
U	0 to 400 -200 to 200	1			0.004 (°C/Ω)	0 to 700 -300 to 400	1			0.009 (°F/Ω)
	0.0 to 600.0	0.1				–	–			–
L	0 to 400 0 to 900	1			0.003 (°C/Ω)	0 to 800 0 to 1600	1			0.006 (°F/Ω)
	0.0 to 400.0 0.0 to 900.0	0.1				–	–			–
PLII	0 to 1200	1			0.005 (°C/Ω)	0 to 2300	1			0.010 (°F/Ω)
W5Re /W26Re	0 to 2300	1			0.017 (°C/Ω)	0 to 3000	1			0.021 (°F/Ω)

*1: The measured temperature range differs for the MELSEC-AnS series module and MELSEC-Q series module. With the MELSEC-Q series module, temperature measurement is possible with ranges less than 400°C / less than 800°F, but accuracy is not guaranteed.

●Program precautions

With the AnS series module and Q series module, the input/output signals (X, Y) and buffer memory address assignments differ. The sequence program needs to be changed.

4) ERNT-ASQT62TCRTBW Terminal block (20P) + Connector (8P)→Terminal block (18P) × 2

Set model	Conversion adapter model	Disconnection detection connector conversion cable	MELSEC-AnS series module model	No. of channels	MELSEC-Q series module model
ERNT-ASQT62TCRTBW	**ERNT-ASQT62TCRT**	Yes	A1S62TCRTBW-S2 A1S64TCTRTBW (heating and cooling control, platinum RTD)	2 channels	Q64TCRTBWN

Conversion adapter (ERNT-ASQT62TCRT)

With A1S62TCRTBW-S2→Q64TCRTBWN

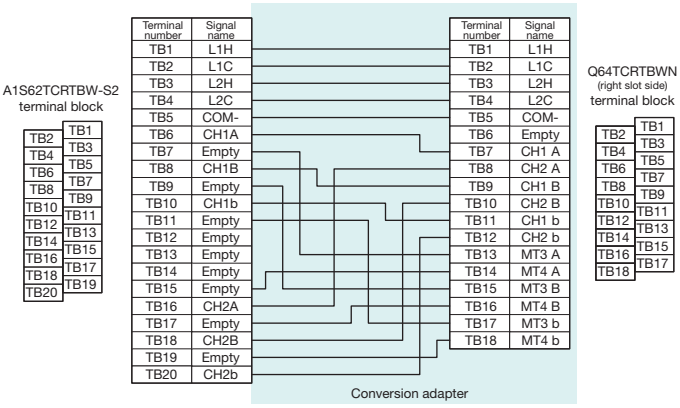

With A1S64TCTRTBW→Q64TCRTBWN

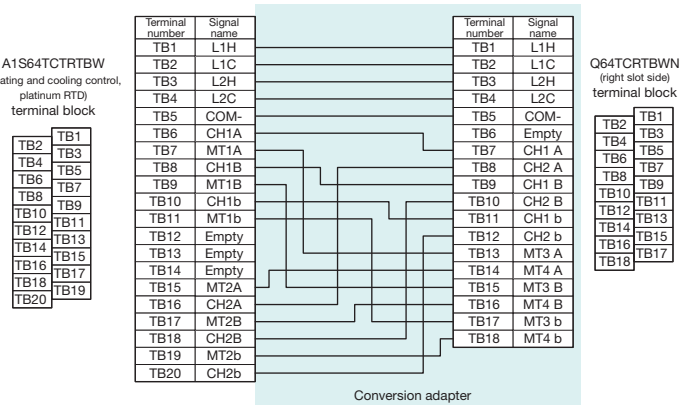

Disconnection detection connector conversion cable

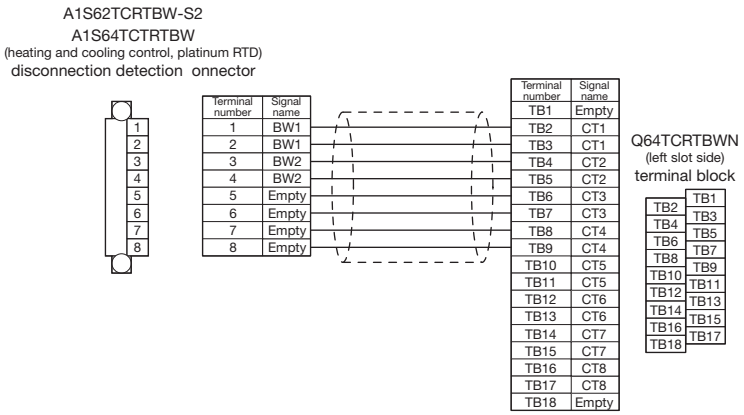

Notes
1. Be sure to install the disconnection detection connector conversion cable on the left side and the conversion adapter on the right side of the MELSEC-Q series module.
   Use of the module with the cable and adapter installed in the reverse causes MELSEC-Q series module damage.

[Specification comparison chart]

Specification \ Model		MELSEC-AnS series		MELSEC-Q series
		A1S62TCRTBW-S2	A1S64TCTRTBW (Under heating and cooling control)	Q64TCRTBWN (Under heating and cooling control)
Control output		Transistor output		
No. of temperature input points		2 channels		
Applicable platinum RTDs		See Table 8.		
Indication precision	Ambient temperature: 23°C±5°C	Full scale × (±0.3%) ±1 digit	–	
	Ambient temperature: 25°C±5°C	–	Full scale × (±0.3%) ±1 digit	Full scale × (±0.3%)
	Ambient temperature: 0°C to 55°C	Full scale × (±0.7%) ±1 digit		Full scale × (±0.7%)
Sampling cycle		500ms / 2 channels (constant regardless of the number of used channels)		
Heating control output cycle		1 to 100s		
Cooling control output cycle				
Sensor current		Approx. 0.25mA	Approx. 0.3mA	–
Impact of allowable input conductor resistance		20Ω or less	10Ω or less	–
Input impedance		–		1MΩ
Input filter		0 to 100s (0: Input filter OFF)		
Sensor correction value setting		-50.00 to 50.00%		
Operation during sensor input disconnection		Upscale processing		
Operation during sensor input short circuit		–	Downscale processing	–
Temperature control method		PID ON/OFF pulse		PID ON/OFF pulse or 2-position control
PID constant range	PID constant setting	Configurable by auto-tuning		
	Proportional band (P)	–	0.1 to 1000.0%	0.0 to 1000.0% (0: 2-position control)
	Heating proportional band (Ph)	0.1 to 1000.0%	–	
	Cooling proportional band (Pc)			
	Integral time (I)	1 to 3600s		0 to 3600s (0: P control, PD control)
	Derivative time (D)	0 to 3600s (0: PI control)		0 to 3600s (0: P control, PI control)
Target value setting range		Within the temperature range set by the used temperature sensor		
Cooling method setting		Air cooling / Water cooling		Air cooling / Water cooling / Linear
Transistor output	Output signal	ON/OFF pulse		
	Rated load voltage	10.2 to 30VDC		10 to 30VDC
	Maximum load current	0.1A/point, 0.4A/common		
	Maximum inrush current	0.4A 10ms		
	Leakage current at OFF	0.1mA or less		
	Maximum voltage drop at ON	1.0VDC (TYP) 0.1A, 2.5VDC (MAX) 0.1 A		
	Response time	OFF→ON: 2ms or less ON→OFF: 2ms or less		
Isolation method		Between input and ground: Transformer insulation Between input and channel: Transformer insulation	Between input terminal and programmable controller power supply: Transformer insulation Between input channels: Transformer insulation	
Heater disconnection detection specifications	Current sensor	U.R.D., Ltd. CTL-12-S36-8 (0.0 to 100.0A) CTL-6-P(-H) (0.00 to 20.00A)		U.R.D., Ltd. CTL-12-S36-8 (0.0 to 100.0A) CTL-12-S36-10 (0.0 to 100.0A) CTL-12-S56-10 (0.0 to 100.0A) CTL-6-P(-H) (0.00 to 20.00A)
	Input method	Multiplexer method: A/D conversion		–
	Input accuracy	–	Full scale × (±1.0%)	
	No. of warning delays	3 to 255		
No. of occupied I/O points		32 points		
Connection method		20-point terminal block + 8-pin connector		18-point terminal block × 2
Internal current consumption (5VDC)		0.28A	0.39A	0.33A

Table 8 Applicable Platinum RTDs

Platinum RTD type	°C		°F	
	Measured temperature range	Data resolution	Measured temperature range	Data resolution
Pt100	-200.0 to 600.0	0.1	-300 to 1100	1
	-200.0 to 200.0		-300.0 to 300.0	0.1
JPt100	-200.0 to 500.0	0.1	-300 to 900	1
	-200.0 to 200.0		-300.0 to 300.0	0.1

●Program precautions
With the AnS series module and Q series module, the input/output signals (X, Y) and buffer memory address assignments differ. The sequence program needs to be changed.

Base Adapter

Specifications

The base adapter allows installation of the MELSEC-Q series using the mounting holes of the MELSEC-AnS series (Additional drilling of holes is not required). With the ERNT-ASQB☐☐N-S1 base adapter, the main base unit and the QA extension base unit QA1S51B can be both installed.

Base adapter model	Specifications		Remark
	MELSEC-AnS series compatible module	MELSEC-Q series compatible module	
ERNT-ASQB38N	A1S38B/A1S38HB/A1S38HBEU	Q38B	When using Q7BAT-SET, mount Q7BAT-SET to the CPU module with the CPU module (prior to Q7BAT-SET mounting) mounted to the base adapter installed.
ERNT-ASQB35N	A1S35B	Q35B	
ERNT-ASQB33N	A1S33B	Q33B	
ERNT-ASQB32N	A1S32B	Q33B	
ERNT-ASQB00JN	A1SJCPU A1SJCPU-S3 A1SJHCPU	Q00JCPU Q00UJCPU	
ERNT-ASQB68N	A1S68B	Q68B	
ERNT-ASQB65N	A1S65B	Q65B	
ERNT-ASQB58N	A1S58B	Q68B (*)	
ERNT-ASQB55N	A1S55B	Q55B	
ERNT-ASQB52N	A1S52B	Q52B	

*Base unit when power supply module mounting is required.

Base adapter model	Specifications			Remark
	MELSEC-AnS series compatible module	MELSEC-Q series compatible module		
		Main	Extension	
ERNT-ASQB38N-S1	A1S38B/A1S38HB/A1S38HBEU	Q38B/Q35B/Q33B	QA1S51B	When using Q7BAT-SET, mount Q7BAT-SET to the CPU module with the CPU module (prior to Q7BAT-SET mounting) mounted to the base adapter installed.
ERNT-ASQB35N-S1	A1S35B	Q35B/Q33B		
ERNT-ASQB33N-S1	A1S33B	Q33B		

Mounting Dimensions

When replacing the module using the ERNT-ASQB☐☐N base adapter

- The base adapter mounting holes (four) share the same dimensions as those for the MELSEC-AnS series base unit. There is no need to drill additional holes on the control panel.
- When replacing the MELSEC-AnS series with the MELSEC-Q series, the slot positions where the module is mounted are different. Adjust the wiring length prior to use.

◎MELSEC-Q series

◎(Reference) MELSEC-AnS series

Unit: mm

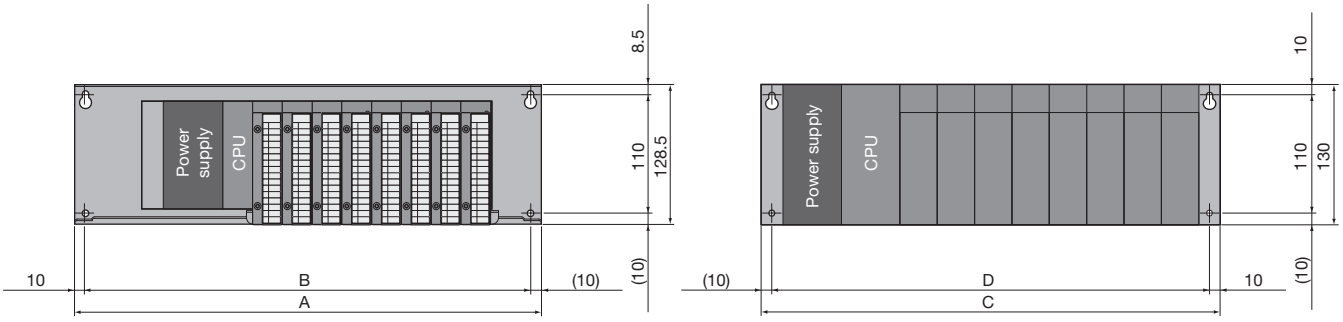

Base adapter model	A	B	MELSEC-AnS series base unit model	C	D
ERNT-ASQB38N	430	410	A1S38B/A1S38HB	430	410
ERNT-ASQB35N	325	305	A1S35B	325	305
ERNT-ASQB33N	255	235	A1S33B	255	235
ERNT-ASQB32N	220	200	A1S32B	220	200
ERNT-ASQB00JN	330	310	A1SJCPU	330	310
			A1SJCPU-S3		
			A1SJHCPU		
ERNT-ASQB68N	420	400	A1S68B	420	400
ERNT-ASQB65N	315	295	A1S65B	315	295
ERNT-ASQB58N	365	345	A1S58N	365	345
ERNT-ASQB55N	260	240	A1S55B	260	240
ERNT-ASQB52N	155	135	A1S52B	155	135

When replacing the module using the ERNT-ASQB□□N-S1 base adapter

- The base adapter mounting holes (four) share the same dimensions as those for the MELSEC-AnS series base unit. There is no need to drill additional holes on the control panel.
- When replacing the MELSEC-AnS series with the MELSEC-Q series, the slot positions where the module is mounted are different. Adjust the wiring length prior to use.
- ERNT-ASQB35N-S1 has a 22mm larger lateral width, and ERNT-ASQB33N-S1 has a 36mm larger lateral width. Be sure to verify the mounting space.

Unit: mm

ERNT-ASQB38N-S1

◎(Reference) MELSEC-AnS series A1S38B/A1S38HB/A1S38HBEU

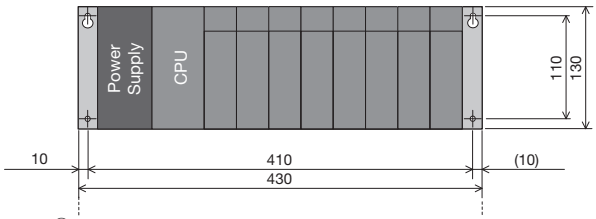

◎ERNT-ASQB38N-S1 + Q38B + QA1S51B

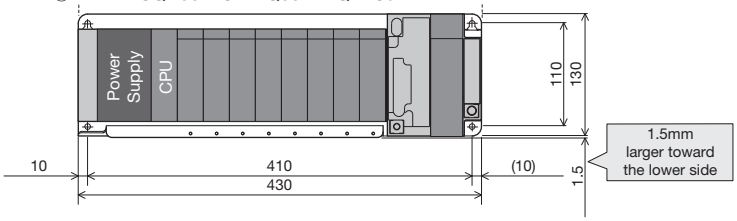

ERNT-ASQB35N-S1

Left-aligned installation

◎(Reference) MELSEC-AnS series A1S35B

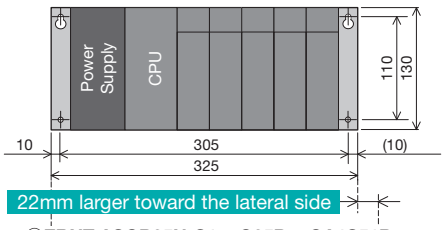

◎ERNT-ASQB35N-S1 + Q35B + QA1S51B

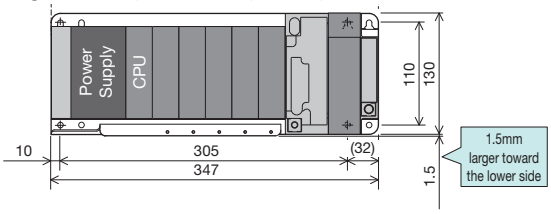

Right-aligned installation

◎(Reference) MELSEC-AnS series A1S35B

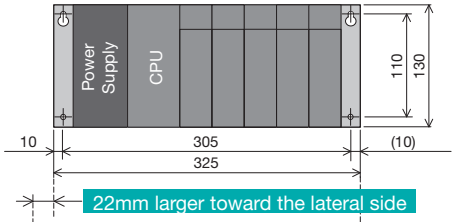

◎ERNT-ASQB35N-S1 + Q35B + QA1S51B

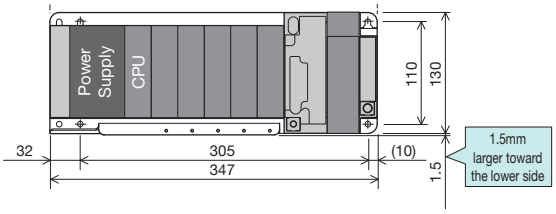

ERNT-ASQB33N-S1

Left-aligned installation

◎(Reference) MELSEC-AnS series A1S33B

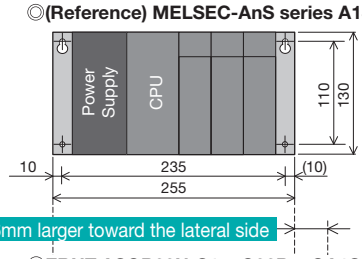

◎ERNT-ASQB33N-S1 + Q33B + QA1S51B

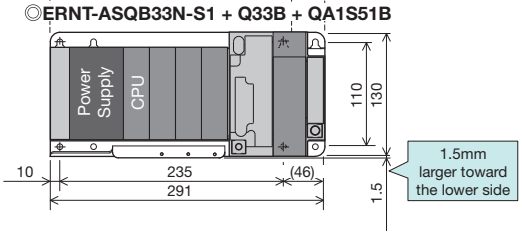

Right-aligned installation

◎(Reference) MELSEC-AnS series A1S33B

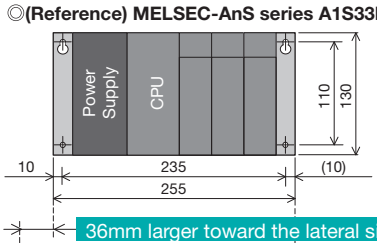

◎ERNT-ASQB33N-S1 + Q33B + QA1S51B

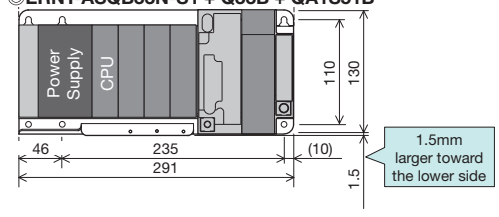

Conversion Adapter DIN Rail Mounting Bracket

Specifications

When mounting the conversion adapter to a DIN rail, you can use a conversion adapter*1 with a fixed base and a disconnection detection connector conversion cable for a temperature control module*2.

*1: Conversion adapter with support flange

	Conversion adapter model
Analog input	ERNT-ASQT68AD-G
High-speed counter	ERNT-ASQTD61, ERNT-ASQTD62, ERNT-ASQTD62D
Temperature input	ERNT-ASQT68TD-H01, ERNT-ASQT68TD-H02

*2: Disconnection detection connector conversion cable

	Conversion adapter model
Temperature control	ERNT-ASQT64TCTTBW, ERNT-ASQT64TCRTBW, ERNT-ASQT62TCTTBW, ERNT-ASQT62TCRTBW

Conversion adapter DIN rail mounting bracket model	Compatible MELSEC-Q series base unit		Remarks
	Main	Extension	
ERNT-ASQDIN3868	Q38B	Q68B	・A DIN adapter manufactured by Mitsubishi Electric is separately required. ・When using Q7BAT-SET, mount Q7BAT-SET to the CPU module with the CPU module (prior to Q7BAT-SET mounting) mounted to the base adapter installed.
ERNT-ASQDIN356500J	Q35B Q00JCPU Q00UJCPU	Q65B	
ERNT-ASQDIN3355	Q33B	Q55B	
ERNT-ASQDIN52	–	Q52B	

Mounting Dimensions

◎ **MELSEC-Q series**

◎ **(Reference) MELSEC-AnS series**

Unit: mm

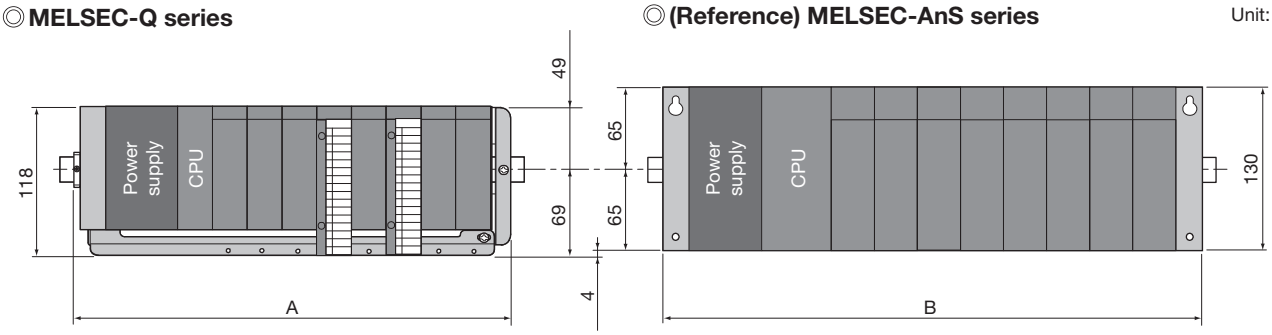

MELSEC-Q series base unit model	A	MELSEC-AnS series base unit model	B
Q38B	352	A1S38B/A1S38HB/A1S38HBEU	430
Q35B	268.5	A1S35B	325
Q33B	213	A1S33B	255
		A1S32B	220
Q00JCPU Q00UJCPU	268.4	A1SJCPU A1SJCPU-S3 A1SJHCPU	330
Q68B	350	A1S68B	420
		A1S58B	365
Q65B	266.5	A1S65B	315
Q55B	211	A1S55B	260
Q52B	127.5	A1S52B	155

Restriction :When installing the MELSEC-Q series without changing the position of the DIN rail, the lower dimension increases by 4mm.

Usage Precautions

The conversion adapter is used to compensate the difference of the pin assignment when the MELSEC-AnS series module is replaced with the MELSEC-Q series module.
When replacing MELSEC-AnS series with MELSEC-Q series, be sure to refer to the manual of each module of the MELSEC-Q series to verify the differences in performance, function, CPU input/output signals, buffer memory addresses, and the like prior to use.
We also recommend that you refer to the "Transition from MELSEC-AnS/QnAS (Small Type) Series to Q Series Handbook" published by Mitsubishi Electric.

Module Width

1) The module width dimension is smaller (34.5 mm→ 27.4 mm) and the wiring area is smaller, requiring verification during mounting.

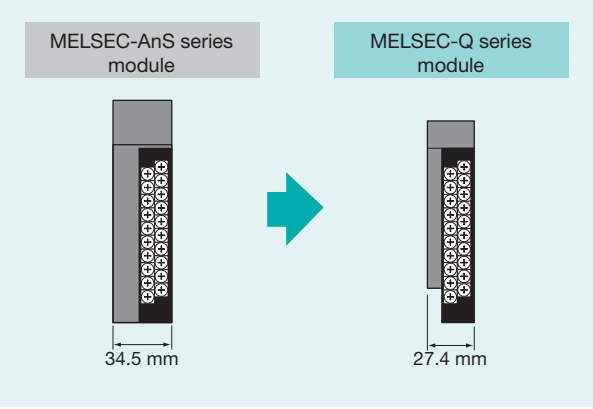

2) If the wiring interferes with a mounted module, lift the wiring forward, etc., so that there is no interference.

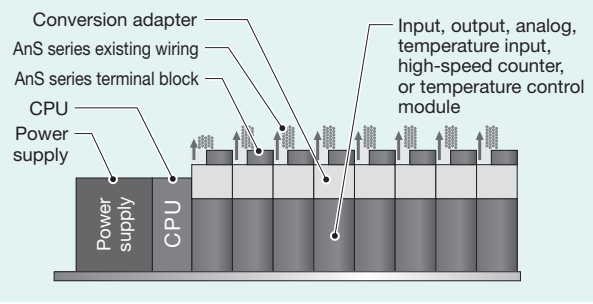

3) If interference still occurs even when you lift the wiring, open up a slot to secure a space for wiring.

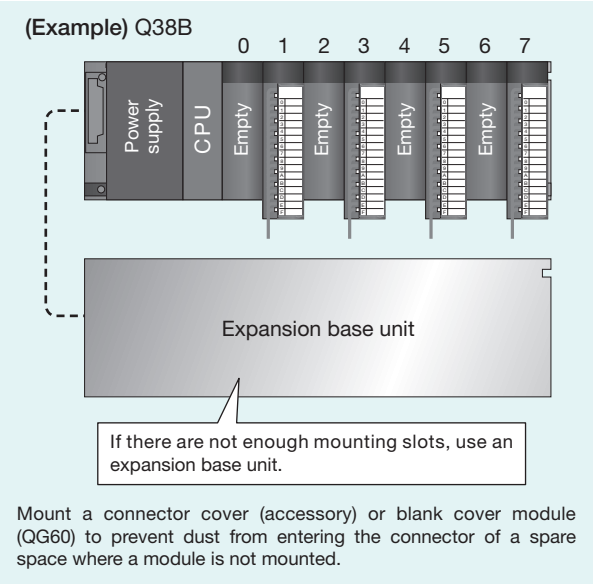

Mount a connector cover (accessory) or blank cover module (QG60) to prevent dust from entering the connector of a spare space where a module is not mounted.

4) In consideration of wiring areas, the number of replaceable modules is as follows.

MELSEC-AnS series base unit model	Replacement		
	MELSEC-Q series base unit model	Mounting method	No. of replaceable modules
A1S38B A1S38HB A1S38HBEU	Q38B	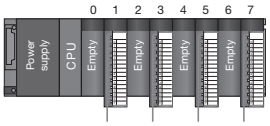	4 modules
A1S35B	Q35B	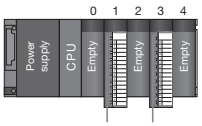	2 modules
A1S33B A1S32B	Q33B	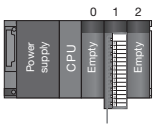	1 modules
A1S68B A1S58B	Q68B	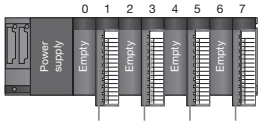	4 modules
A1S65B	Q65B	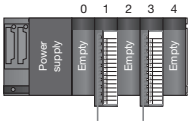	2 modules
A1S55B	Q55B	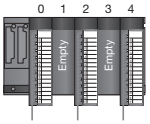	3 modules
A1S52B	Q52B		1 modules
A1SJCPU A1SJCPU-S3 A1SJHCPU	Q00JCPU Q00UJCPU	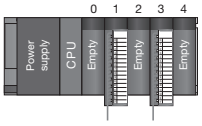	2 modules

5) If replacement is not possible based on 2) or 3) or 4) on the left, investigate using the Mitsubishi Electric AnS-size Q series large type base unit. 3-2

Depth / Height

When using the base adapter

The depth increases by 25.5 to 87.5 mm.
The height of ERNT-ASQT68AD is 11 mm larger toward the lower side, and the height of ERNT-ASQT6☐TC☐☐BW is 1.9 mm larger toward the lower side.

MELSEC-AnS :MELSEC-AnS series MELSEC-Q :MELSEC-Q series

Conversion adapter	ERNT-ASQTXY10 ERNT-ASQTY50 ERNT-ASQTX40 ERNT-ASQTY80 ERNT-ASQTX80 ERNT-ASQT64AD ERNT-ASQTY40 ERNT-ASQT62RD	ERNT-ASQT68AD	ERNT-ASQTY22 ERNT-ASQT64TCTT ERNT-ASQT62DA ERNT-ASQT64TCRT ERNT-ASQT68DA ERNT-ASQT62TCTT ERNT-ASQT63ADA ERNT-ASQT62TCRT
Depth	25.5 mm increase	25.5 mm increase	47.5 mm increase
Height	No increase	11 mm increase	No increase
Mounting diagram	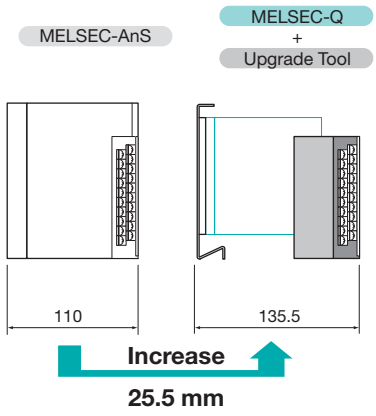	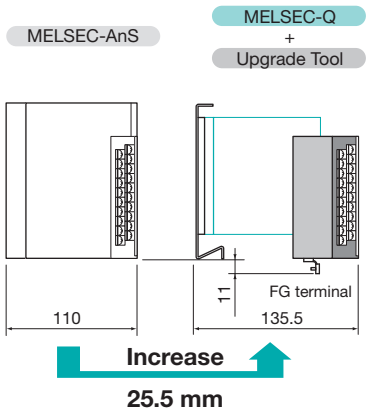	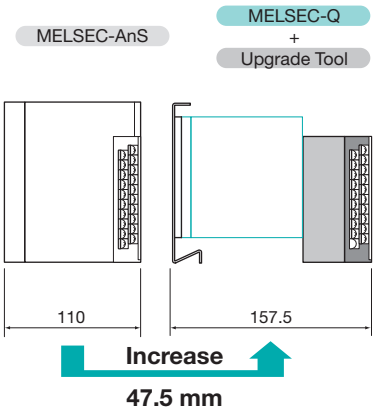

Conversion adapter	ERNT-ASQTX20 ERNT-ASQTY60 ERNT-ASQTY60E	ERNT-ASQT68AD-G ERNT-ASQTD61 ERNT-ASQTD62 ERNT-ASQTD62D ERNT-ASQT68TD-H01	ERNT-ASQT68TD-H02	ERNT-ASQT64TCTTBW ERNT-ASQT64TCRTBW ERNT-ASQT62TCTTBW ERNT-ASQT62TCRTBW
Depth	28 mm increase	47.5 mm increase	87.5 mm increase	47.5 mm increase
Height	No increase	No increase	No increase	19 mm increase
Mounting diagram	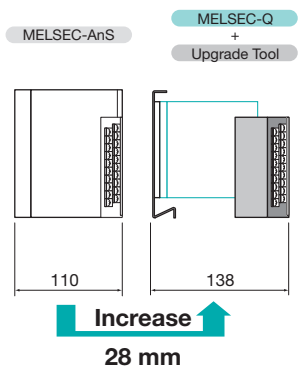	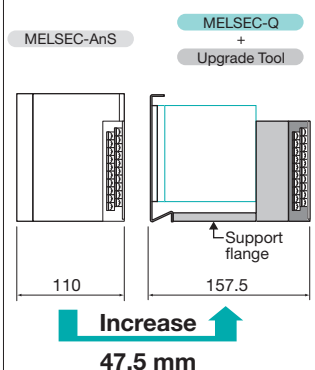	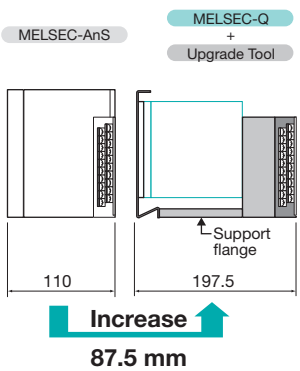	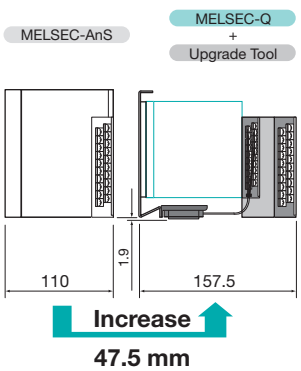

When using the DIN rail

The depth increases by 25.5 to 84.5 mm, and the height increases by 4 to 15.5 mm toward the lower side.

MELSEC-AnS :MELSEC-AnS series MELSEC-Q :MELSEC-Q series

Conversion adapter	ERNT-ASQTXY10 ERNT-ASQTY50 ERNT-ASQTX40 ERNT-ASQTY80 ERNT-ASQTX80 ERNT-ASQT64AD ERNT-ASQTY40 ERNT-ASQT62RD	ERNT-ASQT68AD	ERNT-ASQTY22 ERNT-ASQT64TCTT ERNT-ASQT62DA ERNT-ASQT64TCRT ERNT-ASQT68DA ERNT-ASQT62TCTT ERNT-ASQT63ADA ERNT-ASQT62TCRT
Depth	22.5 mm increase	22.5 mm increase	44.5 mm increase
Height	4 mm increase	15.5 mm increase	4 mm increase
Mounting diagram	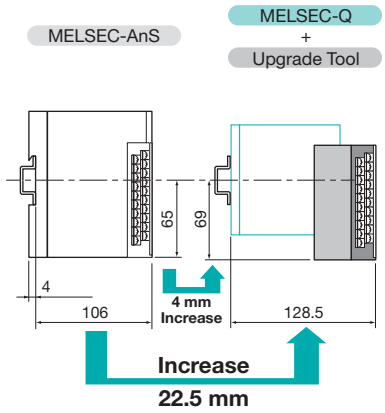	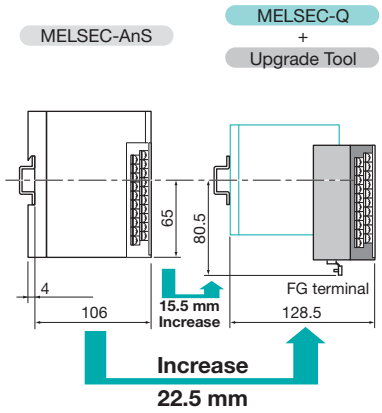	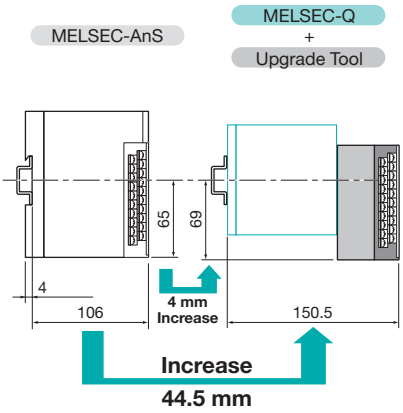

Conversion adapter	ERNT-ASQTX20 ERNT-ASQTY60 ERNT-ASQTY60E	ERNT-ASQT68AD-G ERNT-ASQTD61 ERNT-ASQTD62 ERNT-ASQTD62D ERNT-ASQT68TD-H01	ERNT-ASQT68TD-H02	ERNT-ASQT64TCTTBW ERNT-ASQT64TCRTBW ERNT-ASQT62TCTTBW ERNT-ASQT62TCRTBW
Depth	25 mm increase	44.5 mm increase	84.5 mm increase	44.5 mm increase
Height	4 mm increase	4 mm increase	4 mm increase	5.9 mm increase
Mounting diagram	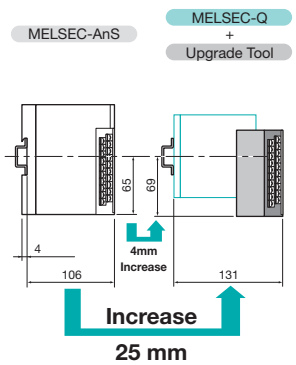	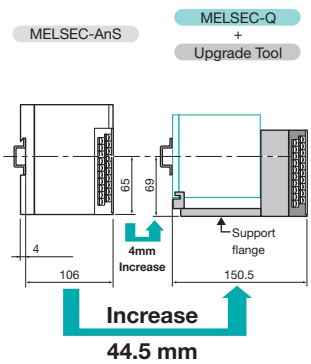	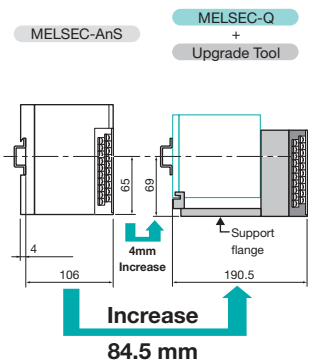	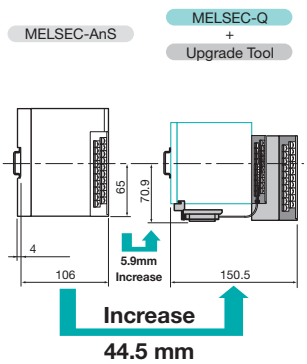

Terminal Block Cover

The terminal block cover of the MELSEC-AnS series is larger than the MELSEC-Q series module width, and therefore needs to be replaced with the terminal block cover provided with the conversion adapter (excluding 2-slot types).

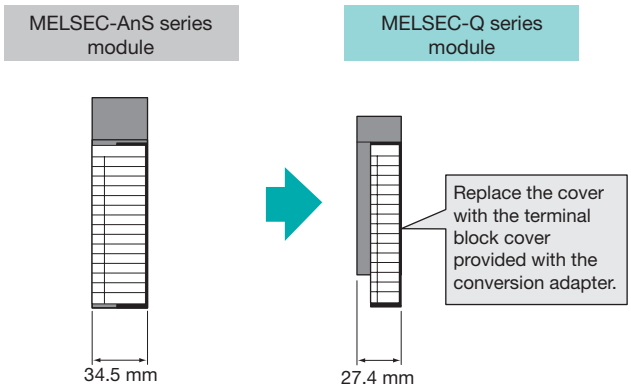

Base Adapter / Conversion Adapter DIN Rail Mounting Bracket

When using the base adapter with a support flange, the base adapter or conversion adapter DIN rail mounting bracket is required. Note that when mounting the MELSEC-Q series base unit to a DIN rail, the DIN adapter manufactured by Mitsubishi Electric is separately required.

Mounting method	Conversion adapter	Disconnection detection connector conversion cable	Base adapter ERNT-ASQB ☐N	Conversion adapter DIN rail mounting bracket ERNT-ASQDIN ☐	Remarks
Panel surface mounting	Support flange	Support	Required	–	–
	No support flange	No support	Required *	–	*Not required when not using the mounting holesof the MELSEC-AnS series base unit.
DIN rail mounting	Support flange	Support	–	Required *	*A DIN adapter manufactured by Mitsubishi Electric is separately required.
	No support flange	No support	–	No required	–

Slot Positions

When you replace the MELSEC-AnS series with the MELSEC-Q series, the slot positions are different. Change the slot positions where modules are mounted (if there are open slots) and adjust the wiring lengths prior to use.

1) A1S38B/A1S38HB/A1S38HBEU→Q38B

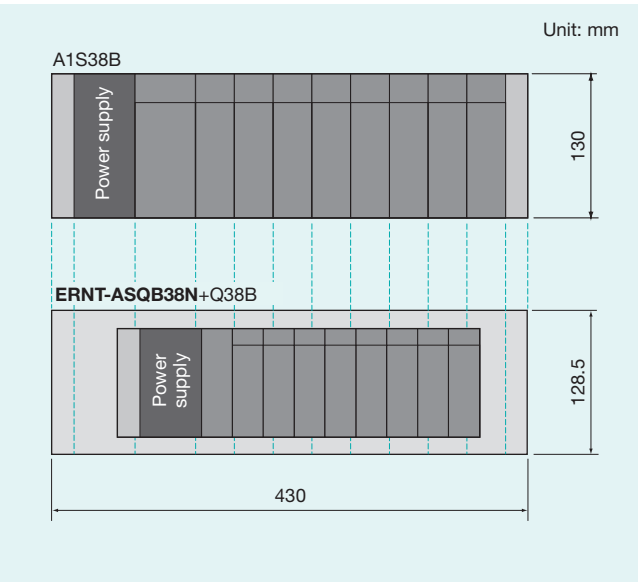

2) A1S35B→Q35B

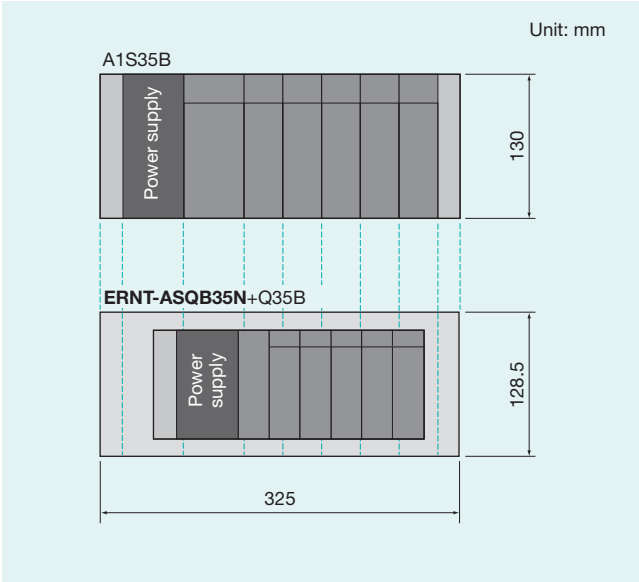

3) A1S33B→Q33B

Unit: mm

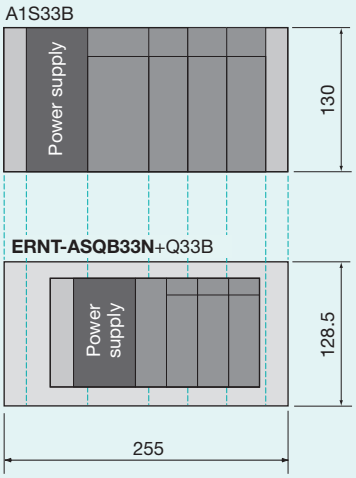

4) A1S32B→Q33B

Unit: mm

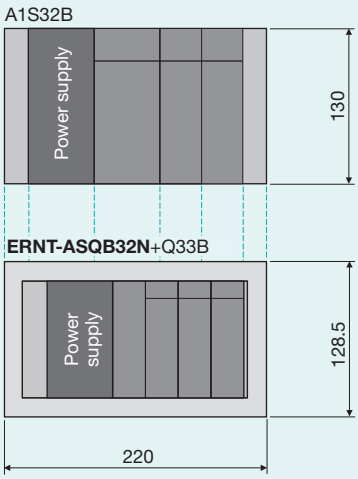

5) A1SJCPU/-S3, A1SJHCPU→Q00JCPU, Q00UJCPU, Q35B

Unit: mm

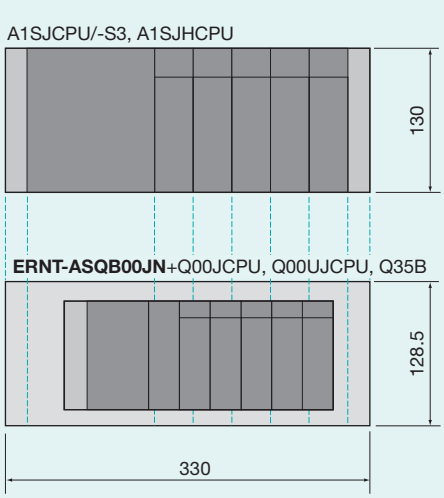

6) A1S68B→Q68B

Unit: mm

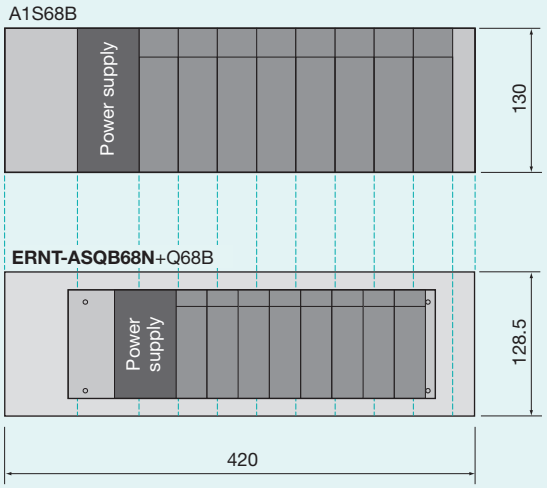

7) A1S65B→Q65B

Unit: mm

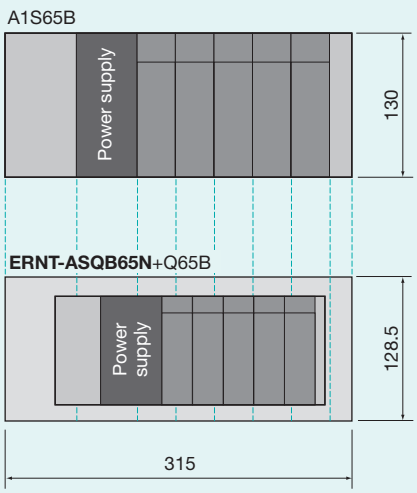

8) A1S58B→Q68B

Unit: mm

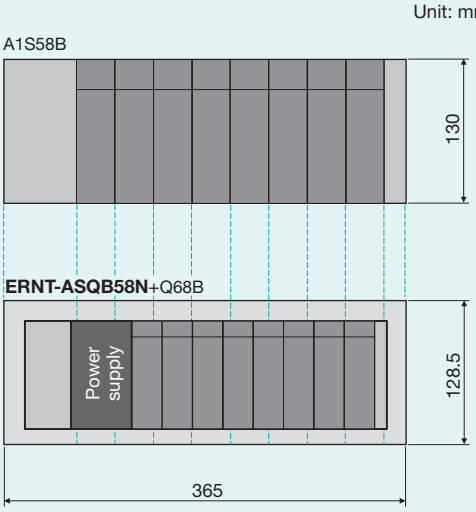

9) A1S55B→Q55B

Unit: mm

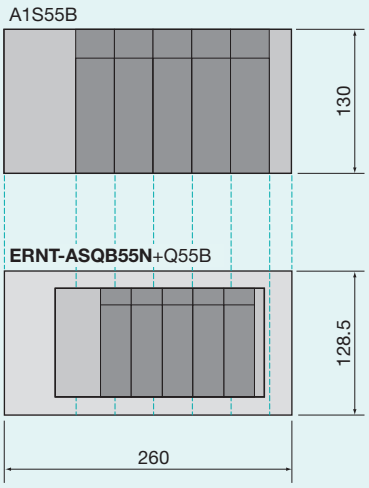

10) A1S52B→Q52B

Unit: mm

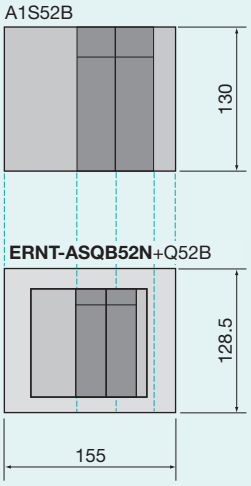

11) A1S38B/A1S38HB/A1S38HBEU→Q38B+QA1S51B

Unit: mm

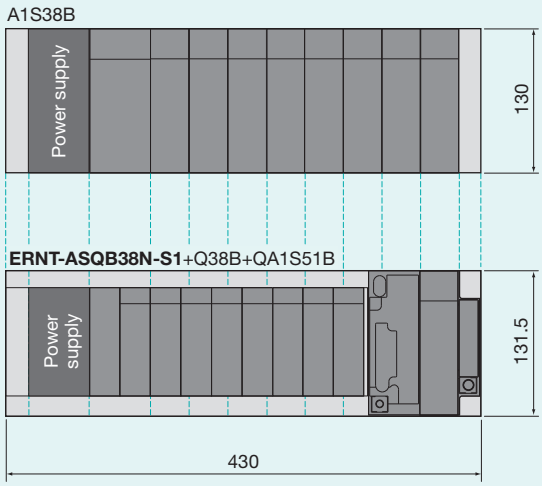

12) A1S35B→Q35B+QA1S51B

Unit: mm

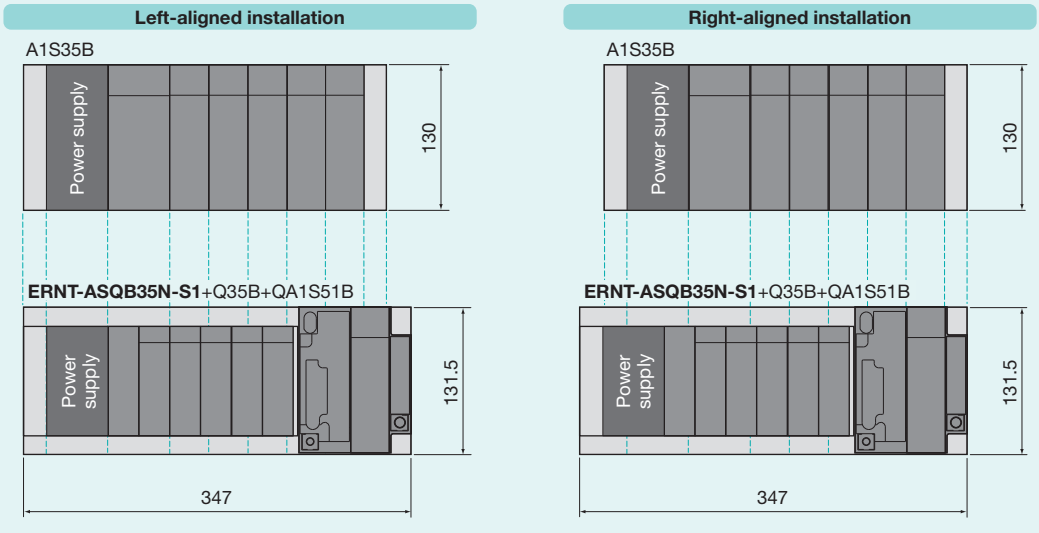

13) A1S33B→Q33B+QA1S51B

Unit: mm

Left-aligned installation

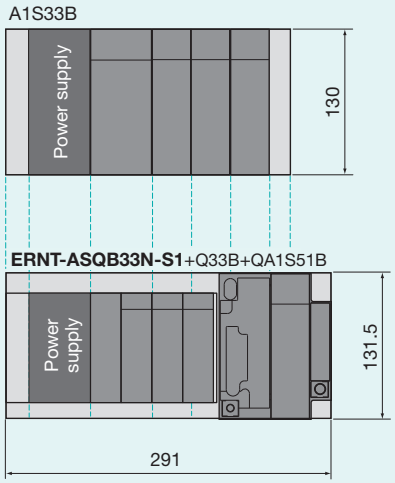

Right-aligned installation

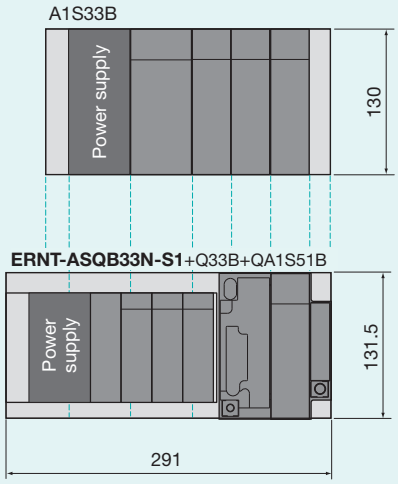

External Dimensions

Conversion Adapter

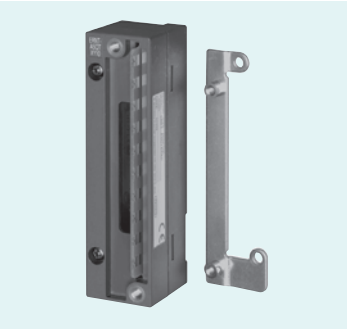

Model names:

ERNT-ASQTXY10
ERNT-ASQTX40
ERNT-ASQTX80
ERNT-ASQTY22
ERNT-ASQTY40
ERNT-ASQTY50
ERNT-ASQTY80
ERNT-ASQT64AD
ERNT-ASQT62DA
ERNT-ASQT68DA
ERNT-ASQT63ADA
ERNT-ASQT62RD

Unit: mm

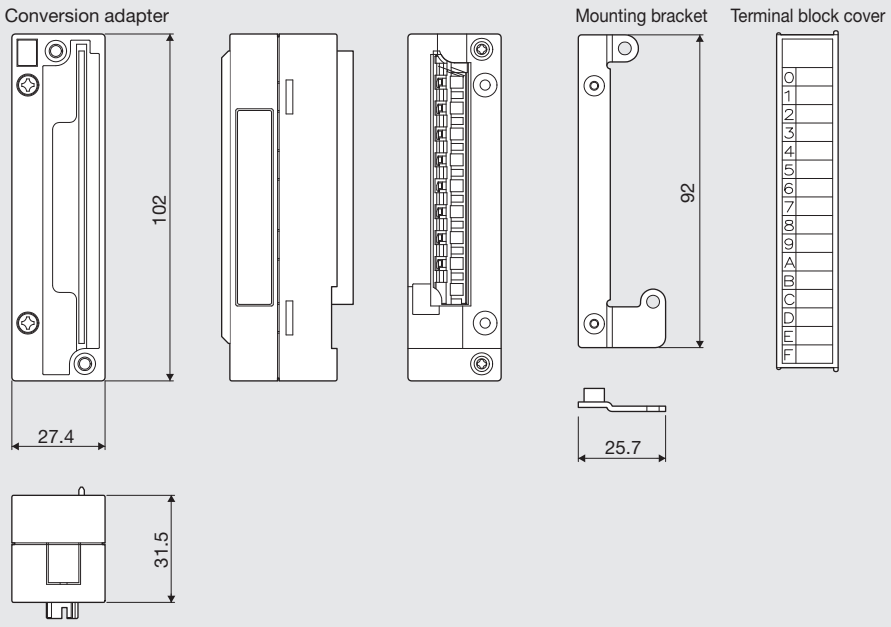

Weight: 75g

Model name:

ERNT-ASQT68AD

Unit: mm

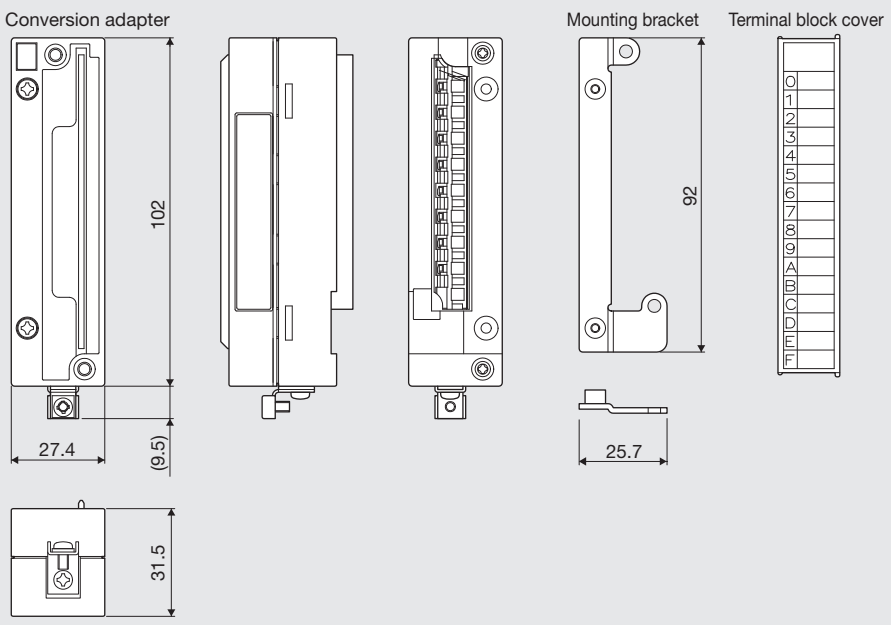

Weight: 80g

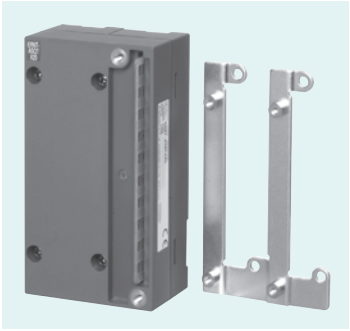

Model names:

ERNT-ASQTX20
ERNT-ASQTY60
ERNT-ASQTY60E

Unit: mm

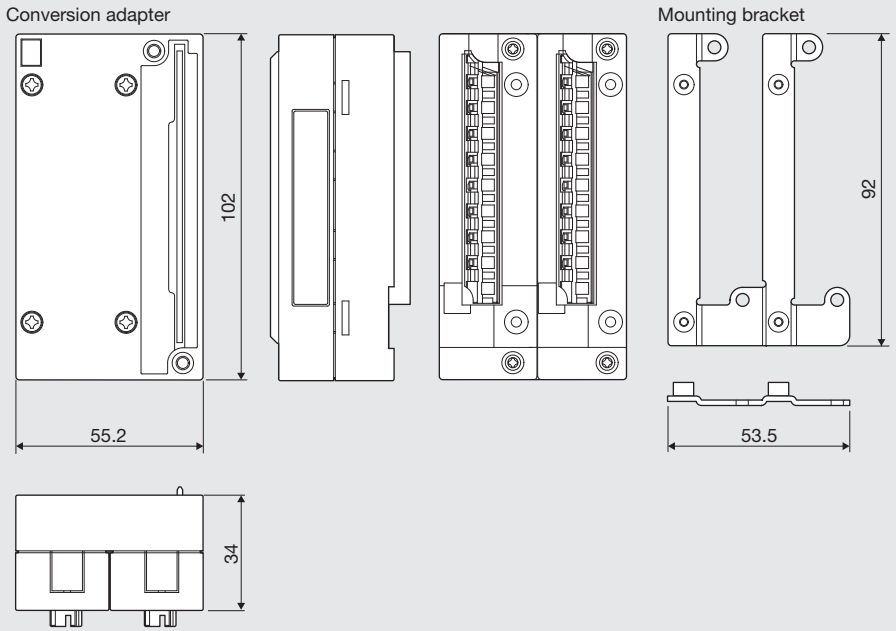

Weight: 155g

Model names:

ERNT-ASQT68AD-G
ERNT-ASQT68TD-H01
ERNT-ASQT68TD-H02

Unit: mm

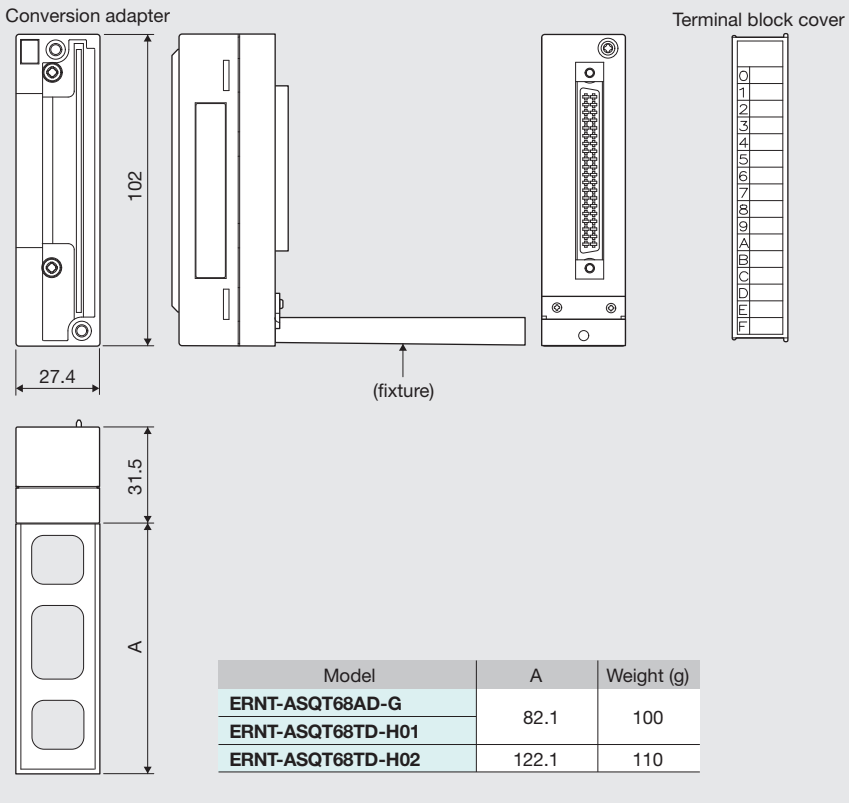

Model	A	Weight (g)
ERNT-ASQT68AD-G	82.1	100
ERNT-ASQT68TD-H01		
ERNT-ASQT68TD-H02	122.1	110

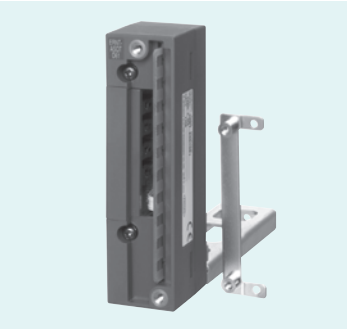

Model names:

ERNT-ASQTD61
ERNT-ASQTD62
ERNT-ASQTD62D

Unit: mm

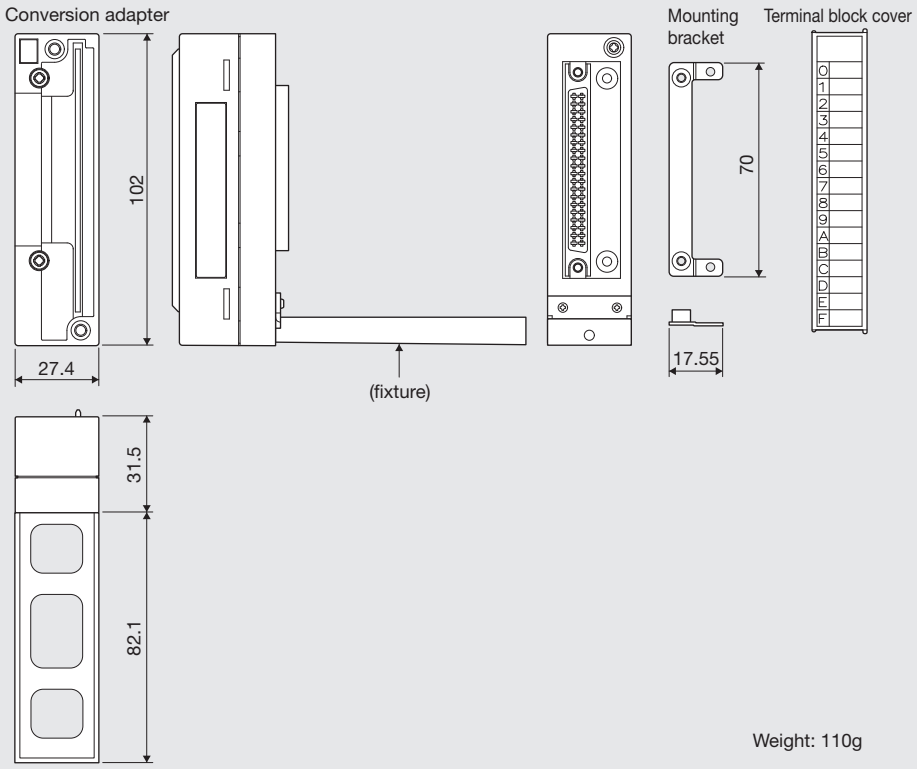

Weight: 110g

Model names:

ERNT-ASQT64TCTT
ERNT-ASQT64TCRT
ERNT-ASQT62TCTT
ERNT-ASQT62TCRT

Unit: mm

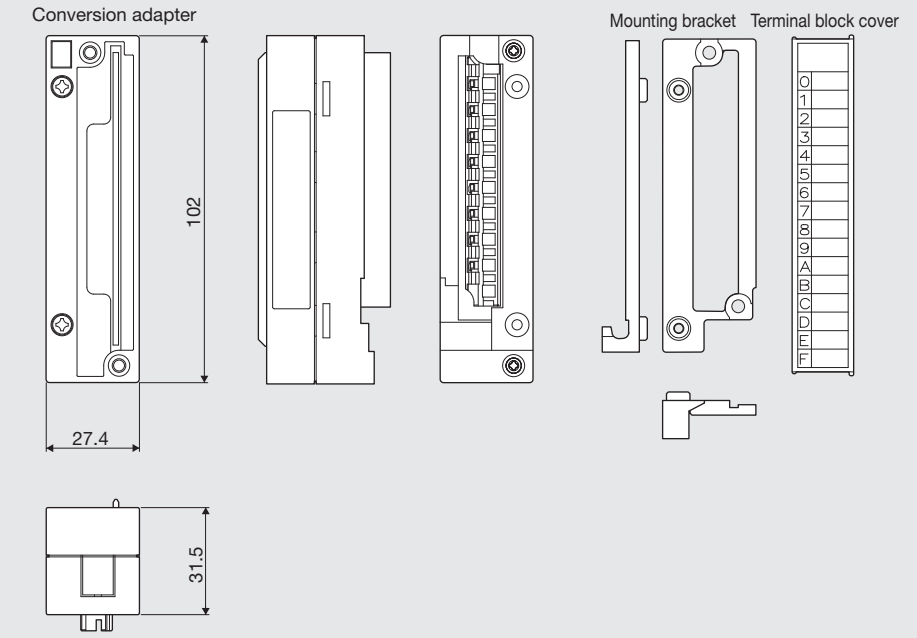

Weight: 70g

Model names:

ERNT-ASQT64TCTTBW
ERNT-ASQT64TCRTBW
ERNT-ASQT62TCTTBW
ERNT-ASQT62TCRTBW

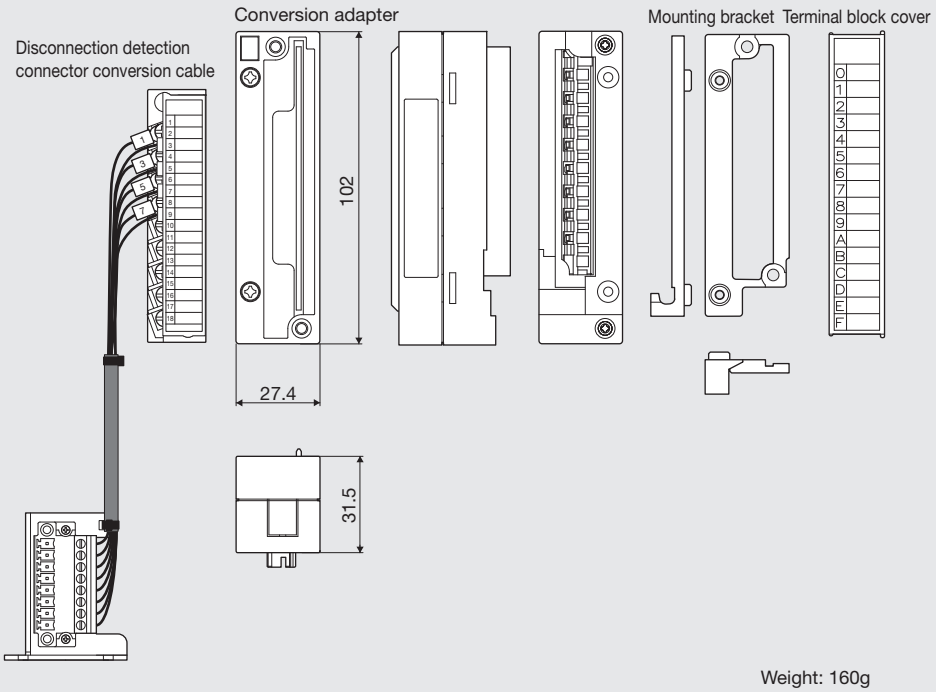

Base Adapter

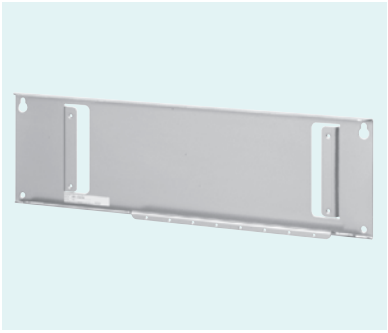

Model names:

ERNT-ASQB38N
ERNT-ASQB35N
ERNT-ASQB33N
ERNT-ASQB00JN
ERNT-ASQB68N
ERNT-ASQB65N
ERNT-ASQB58N
ERNT-ASQB55N
ERNT-ASQB52N

Unit: mm

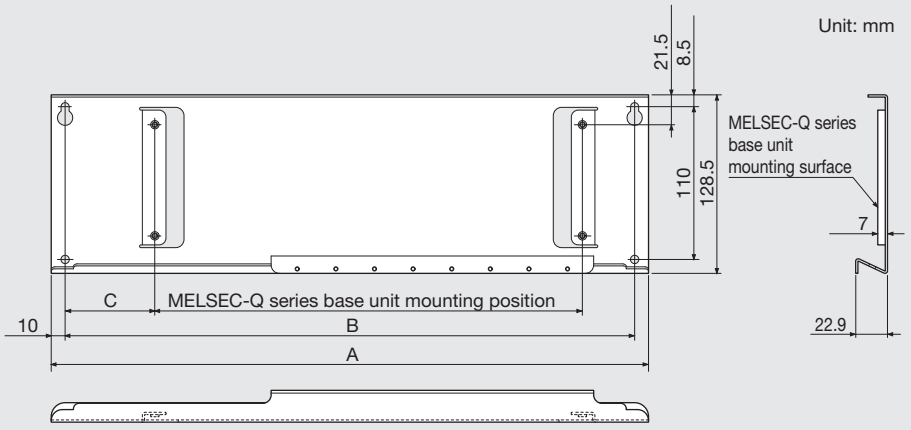

Model	A	B	C	Weight (g)
ERNT-ASQB38N	430	410	64.6	840
ERNT-ASQB35N	325	305	53.8	635
ERNT-ASQB33N	255	235	46.6	490
ERNT-ASQB00JN	330	310	58.8	640
ERNT-ASQB68N	420	400	62	820
ERNT-ASQB65N	315	295	51.2	615
ERNT-ASQB58N	365	345	21.1	700
ERNT-ASQB55N	260	240	51.8	510
ERNT-ASQB52N	155	135	30.3	270

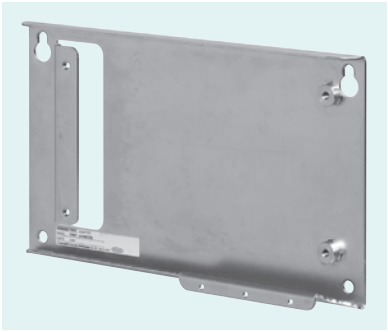

Model names:

ERNT-ASQB32N

Unit: mm

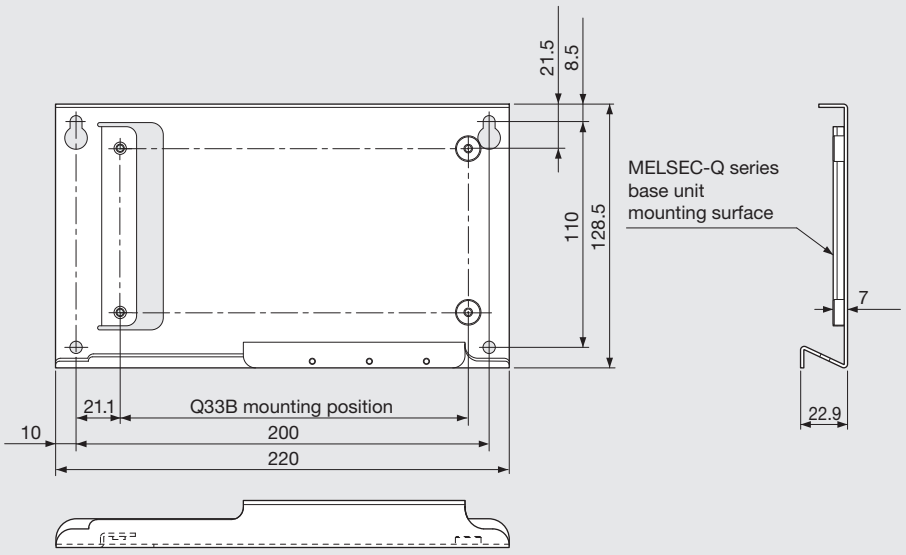

Weight: 420g

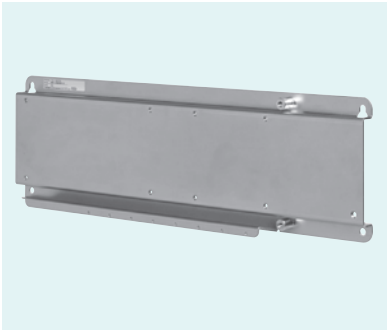

Model names:

ERNT-ASQB38N-S1
ERNT-ASQB35N-S1
ERNT-ASQB33N-S1

Unit: mm

ERNT-ASQB38N-S1

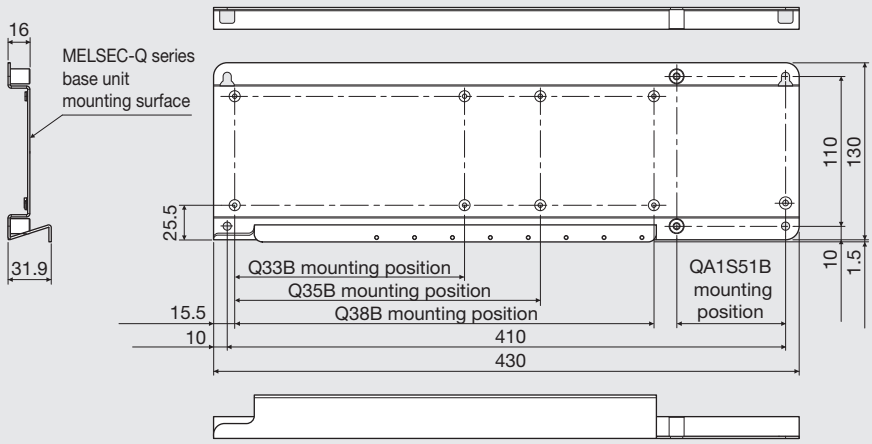

Weight: 975g

ERNT-ASQB35N-S1

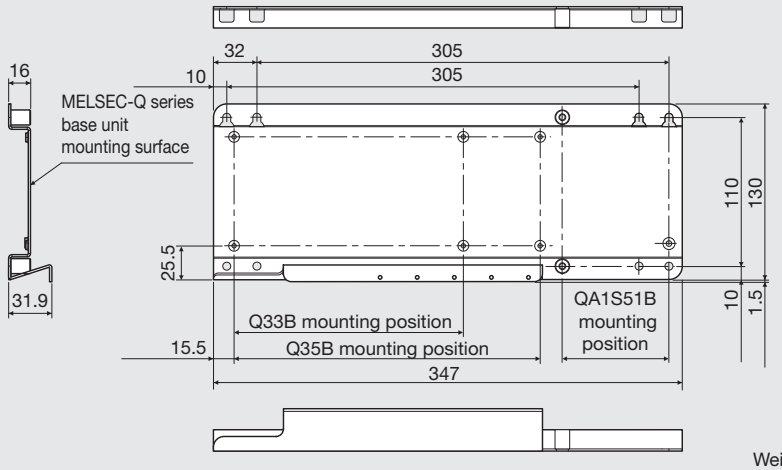

Weight: 765g

ERNT-ASQB33N-S1

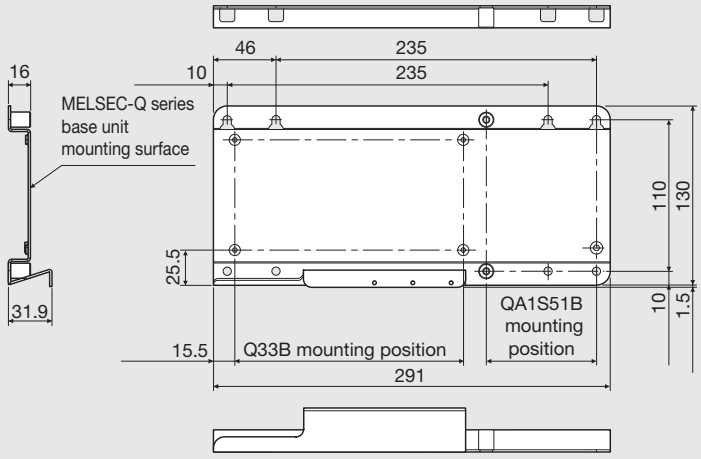

Weight: 630g

Conversion Adapter DIN Rail Mounting Bracket

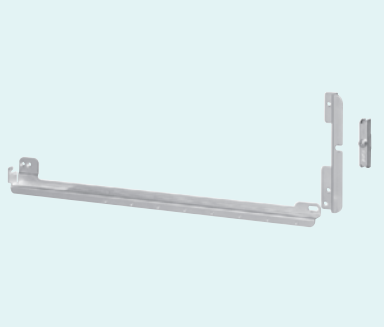

Model names:

ERNT-ASQDIN3868
ERNT-ASQDIN356500J
ERNT-ASQDIN3355

Unit: mm

Conversion adapter DIN rail mounting bracket (bottom)

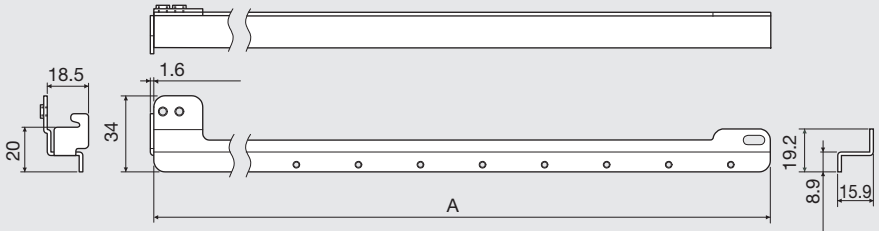

Conversion adapter DIN rail mounting bracket (right)

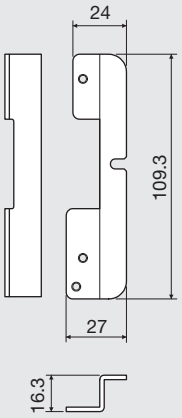

Stopper

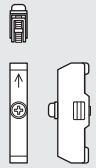

Model	A	Weight (g)
ERNT-ASQDIN3868	318.8	195
ERNT-ASQDIN356500J	235.4	165
ERNT-ASQDIN3355	179.8	150

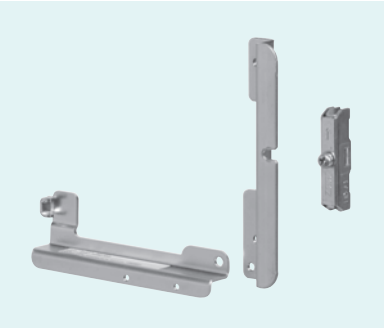

Model names:

ERNT-ASQDIN52

Unit: mm

Conversion adapter DIN rail mounting bracket (bottom)

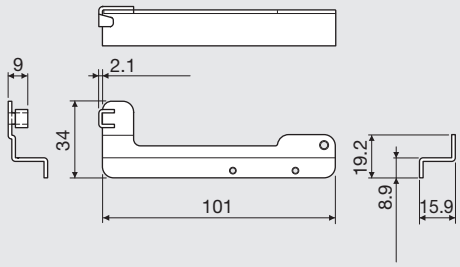

Conversion adapter DIN rail mounting bracket (right)

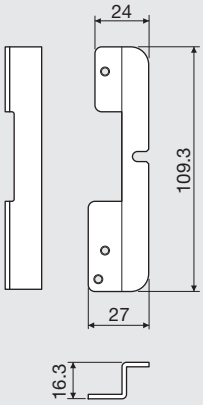

Stopper

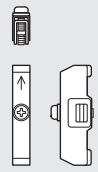

Weight: 115g

Memo

C Q series SYSMAC C Series ⇨ MELSEC-Q Series Upgrade Tool

Upgrading from the SYSMAC C Series to the MELSEC-Q Series

Simplifies replacement with the MELSEC-Q series

The upgrade tool makes it easy to replace the OMRON SYSMAC C series programmable controller with the Mitsubishi Electric MELSEC-Q series.

Significantly shortens the time required for input and output module wiring, and significantly reduces wiring errors

- The upgrade tool allows you to connect the wiring connected to the SYSMAC C series input/output modules as is to the MELSEC-Q series using a conversion adapter. (Some power supply and common terminal connection changes required.)
- By using a base adapter, the MELSEC-Q series can be installed using the SYSMAC C series mounting holes. (Additional drilling of holes is not required.)

Product Overview

This upgrade tool comprises a "conversion adapter" that changes the existing wiring connected to OMRON PLC SYSMAC C series input and output modules to wiring applicable to the modules of the MELSEC-Q series, a "conversion adapter support flange" for fixing the bottom of the conversion adapter in place, a "base adapter" that makes it possible to install the MELSEC-Q series base unit using the mounting holes of the SYSMAC C series base unit, and a "program converter" for converting the sequence program.

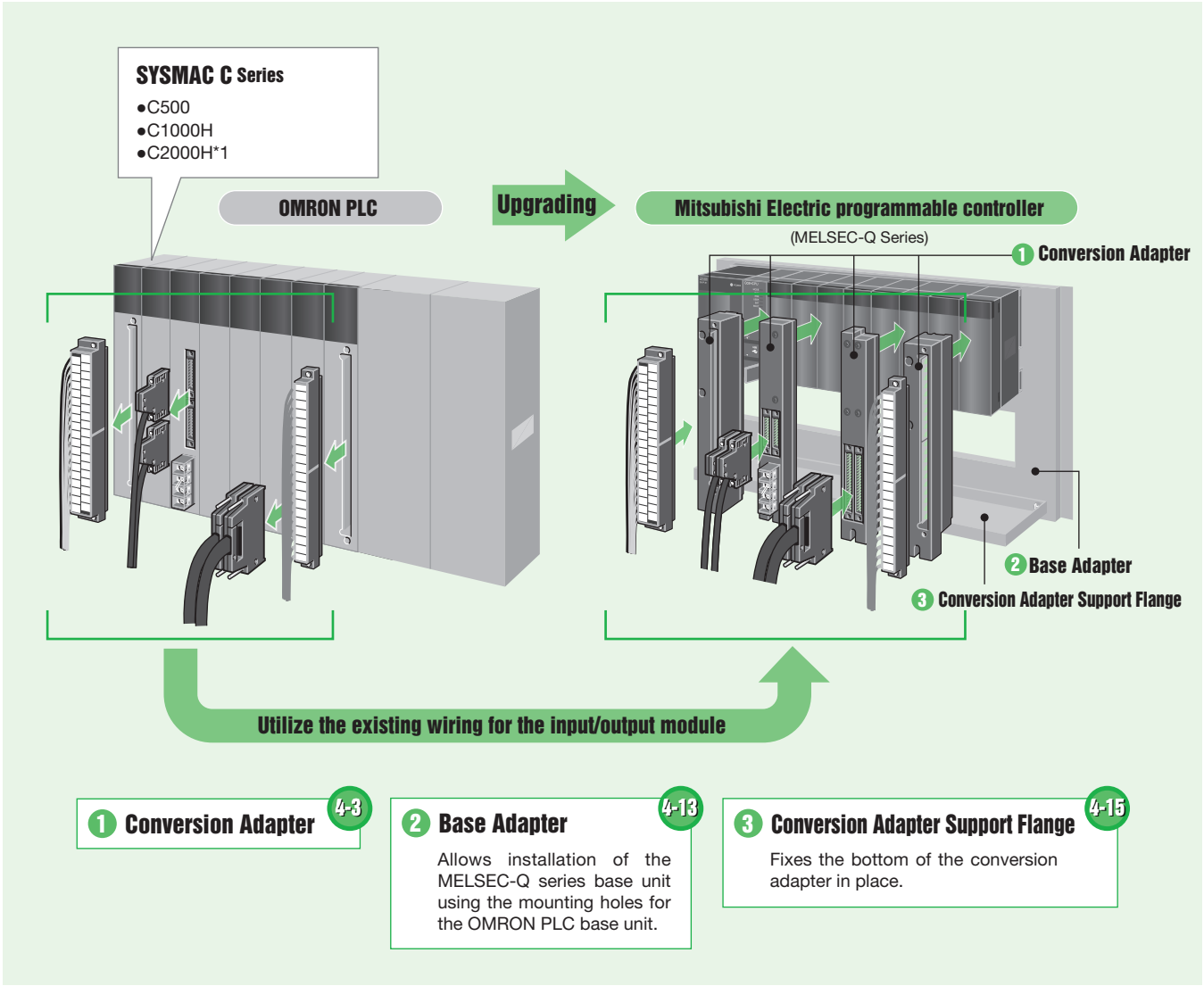

1 Conversion Adapter 4-3

2 Base Adapter 4-13

Allows installation of the MELSEC-Q series base unit using the mounting holes for the OMRON PLC base unit.

3 Conversion Adapter Support Flange 4-15

Fixes the bottom of the conversion adapter in place.

*1 The conversion adapters are only for the C500.

Model List

1 Conversion Adapter

[1-slot type]

Input/ Output	SYSMAC C series module model before replacement	MELSEC-Q series module model after replacement	Conversion adapter: Model	Shape: SYSMAC C series	Shape: MELSEC-Q series	No. of input/ output points	Page
Input	C500-IA121	QX10	**ERNT-CQTX121**	Terminal block (20 points)	Terminal block (18 points)	16 points	**4-3**
	C500-ID112	QX70	**ERNT-CQTX112213**				**4-3**
	C500-ID213	QX40, QX40-S1					
	C500-ID215	QX41	**ERNT-CQTX215218**	Terminal block (38 points)	Connector (40P)	32 points	**4-4**
	C500-ID218	QX41, QX41-S1					
	C500-ID218CN	QX41, QX41-S1	**ERNT-CQCX218501**	Connector (24P) × 2 + Terminal block (4 points)	Connector (40P)		**4-4**
	C500-ID501CN	QX71					
	C500-ID114	QX72	**ERNT-CQCX114219**	Connector (40P) × 2	Connector (40P) × 2	64 points	**4-5**
	C500-ID219	QX42, QX42-S1, QX82					
Output	C500-OC221	QY10	**ERNT-CQTY221**	Terminal block (20 points)	Terminal block (18 points)	16 points	**4-6**
	C500-OA121	QY22	**ERNT-CQTY226**				**4-6**
	C500-OA222	QY22					
	C500-OA226	QY22					
	C500-OD219	QY40P, QY50	**ERNT-CQTY219217**				**4-7**
	C500-OD217	QY40P, QY50					
	C500-OD411	QY40P, QY50	**ERNT-CQTY411**				**4-7**
	C500-OD412	QY41P	**ERNT-CQTY412**	Terminal block (38 points)	Connector (40P)	32 points	**4-8**
	C500-OD414	QY41P	**ERNT-CQTY414218** (*1)				**4-8**
	C500-OD218	QY41P					
	C500-OD415CN	QY41P	**ERNT-CQCY415**	Connector (24P) × 2 + Terminal block (4 points)	Connector (40P)		**4-9**
	C500-OD501CN	QY71	**ERNT-CQCY501**				**4-9**
	C500-OD213	QY42P	**ERNT-CQCY213**	Connector (40P) × 2	Connector (40P) × 2	64 points	**4-10**

[2-slot type]

Input/ Output	SYSMAC C series module model before replacement	MELSEC-Q series module model after replacement	Conversion adapter: Model	Shape: SYSMAC C series	Shape: MELSEC-Q series	No. of input/ output points	Page
Input	C500-IA122	QX10 × 2 modules	**ERNT-CQTX122**	Terminal block (38 points)	Terminal block (18 points) × 2	32 points	**4-11**
Output	C500-OC224	QY10 × 2 modules	**ERNT-CQTY224**				**4-11**
	C500-OA225	QY22 × 2 modules	**ERNT-CQTY225**				**4-12**
	C500-OD218	QY50 × 2 modules	**ERNT-CQTY218** (*1)				**4-12**
	C500-OD414						

*1: In a case where the switching capacity (load current) cannot be satisfied with a 1-slot type (QY41P), satisfaction can be achieved using a 2-slot type (QY50 × 2 modules).
[Point] The universal conversion adapter (see 7-6) can be used for replacing modules not listed above (C500-IA222/IA223/OC223/OD215/OD212/OA223).

2 Base Adapter

SYSMAC C series module model before replacement	MELSEC-Q series module model after replacement	Base adapter model	Mountable conversion adapter support flange	Page
C500-BC081/082 C500-BC091 C2000-BC061 C500-BI081 C2000-BI083	Q312B Q38B Q612B, Q68B	**ERNT-CQB081**	Conversion adapter support flanges ERNT-QF12 and ERNT-QF8	**4-13** to **4-14**
C500-BC051/052 C500-BC061 C500-BI051	Q38B, Q35B Q68B, Q65B, Q55B	**ERNT-CQB051**	Conversion adapter fixtues ERNT-QF8 and ERNT-QF5	
C500-BC031	Q35B, Q33B	**ERNT-CQB031**	Conversion adapter support flange ERNT-QF5	

3 Conversion Adapter support flange

Conversion adapter support flange model	Description	Remarks	Page
ERNT-QF12	12-slot conversion adapter support flange	A conversion adapter support flange is always required with conversion adapter use.	**4-15**
ERNT-QF8	8-slot conversion adapter support flange		
ERNT-QF5	5-slot conversion adapter support flange		

Conversion Adapter

Specifications

1-slot type

1) ERNT-CQTX121 Terminal block (20p)→Terminal block (18p)

Conversion adapter model	SYSMAC C series module model	No. of input points	MELSEC-Q series module model
ERNT-CQTX121	C500-IA121	16 points	QX10

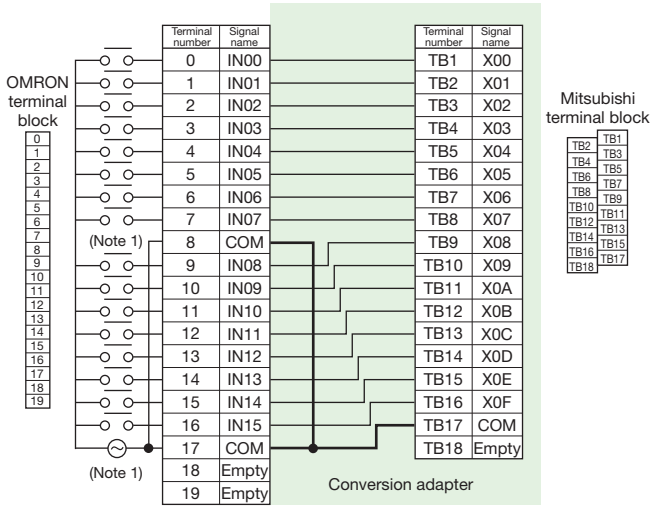

[Input module specification comparison chart]

Specification \ Model		SYSMAC C series C500-IA121	MELSEC-Q series QX10
No. of input points		16 points	16 points
Input voltage		100 to 120VAC	100 to 120VAC
Input current		10mA/100VAC	Approx. 8mA/100VAC
Operating voltage	ON voltage	60VAC or more	80VAC or more
	OFF voltage	20VAC or less	30VAC or less
Input response time	ON response time	35ms or less	15ms or less
	OFF response time	55ms or less	20ms or less
Isolation method		Photocoupler isolation	Photocoupler isolation
External connection		20P terminal block	18P terminal block
No. of points per common (Note 1)		8 points (2 circuits)	16 points (1 circuit)
Internal current consumption		180mA or less	50mA

Notes
1. In a case where the number of points per common changes from eight (two circuits) to 16 and the terminal numbers 8 and 17 on the SYSMAC C series side are used separately, a wiring change is required.
2. For ▭ areas, verify that the MELSEC-Q series module specifications satisfy the specifications of the connected device/equipment.
3. For detailed and general specifications not described in the input module specification comparison chart, refer to the user's manual of the input module used.

2) ERNT-CQTX112213 Terminal block (20p)→Terminal block (18p)

Conversion adapter model	SYSMAC C series module model	No. of input points	MELSEC-Q series module model
ERNT-CQTX112213	C500-ID112	16 points	QX70
	C500-ID213		QX40, QX40-S1

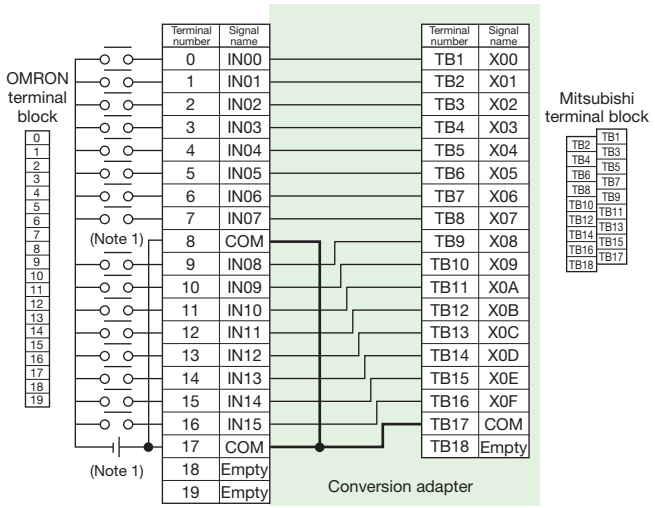

[Input module specification comparison chart]

Specification \ Model		SYSMAC C series C500-ID112 (Sink type)	MELSEC-Q series QX70 (Sink/Source common type)
No. of input points		16 points	16 points
Input voltage		5 to 12VDC	5VDC/12VDC
Input current		16mA/12VDC	Approx. 3.3mA/12VDC
Operating voltage	ON voltage	4VDC or more	3.5VDC or more
	OFF voltage	1.5VDC or less	1VDC or less
Input response time	ON response time	1.5ms or less	1/5/10/20/70ms or less
	OFF response time	1.5ms or less	1/5/10/20/70ms or less
Isolation method		Photocoupler isolation	Photocoupler isolation
External connection		20P terminal block	18P terminal block
No. of points per common		8 points (2 circuits)	16 points (1 circuit)
Internal current consumption		10mA or less	55mA

Specification \ Model		SYSMAC C series C500-ID213 (Sink type)	MELSEC-Q series QX40 (Sink type)	MELSEC-Q series QX40-S1 (Sink type)
No. of input points		16 points	16 points	16 points
Input voltage		12 to 24VDC	24VDC	24VDC
Input current		10mA/24VDC	Approx. 4mA/24VDC	Approx. 6mA/24VDC
Operating voltage	ON voltage	10.2VDC or more	19VDC or more	19VDC or more
	OFF voltage	3VDC or less	11VDC or less	11VDC or less
Input response time	ON response time	1.5ms or less	1/5/10/20/70ms or less	0.1/0.2/0.4/0.6/1ms
	OFF response time	1.5ms or less	1/5/10/20/70ms or less	0.1/0.2/0.4/0.6/1ms
Isolation method		Photocoupler isolation	Photocoupler isolation	Photocoupler isolation
External connection		20P terminal block	18P terminal block	18P terminal block
No. of points per common (Note 1)		8 points (2 circuits)	16 points (1 circuit)	16 points (1 circuit)
Internal current consumption		20mA or less	50mA	60mA

Notes
1. In a case where the number of points per common changes from eight (two circuits) to 16 and the terminal numbers 8 and 17 on the SYSMAC C series side are used separately, a wiring change is required.
2. For ▭ areas, verify that the MELSEC-Q series module specifications satisfy the specifications of the connected device/equipment.
3. For detailed and general specifications not described in the input module specification comparison chart, refer to the user's manual of the input module used.

3) ERNT-CQTX215218 Terminal block (38P)→Connector (40P)

Conversion adapter model	SYSMAC C series module model	No. of input points	MELSEC-Q series module model
ERNT-CQTX215218	C500-ID215	32 points	QX41
	C500-ID218		QX41, QX41-S1

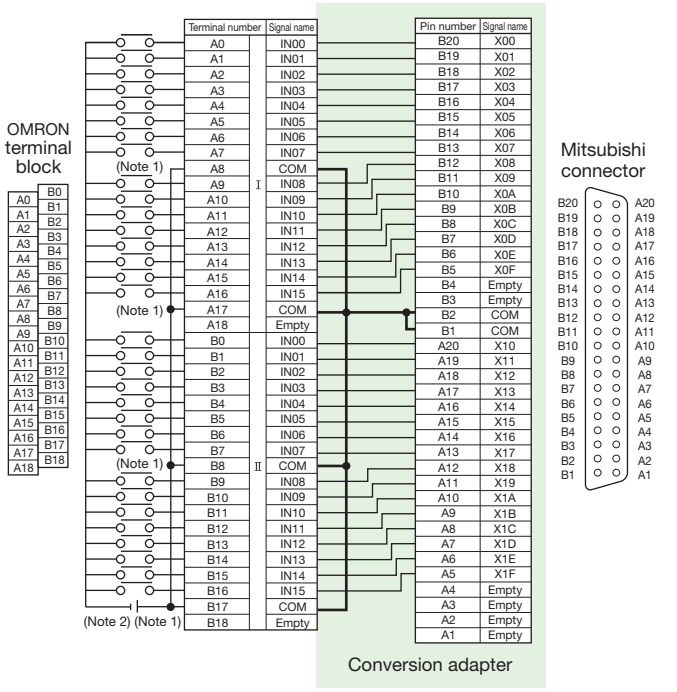

[Input module specification comparison chart]

Specification \ Model		SYSMAC C series C500-ID215 (Sink/Source common type)	MELSEC-Q series QX41 (Sink type)
No. of input points		32 points	32 points
Input voltage		12 to 24VDC	24VDC
Input current		10mA/24VDC	Approx. 4mA/24VDC
Operating voltage	ON voltage	10.2VDC or more	19VDC or more
	OFF voltage	3VDC or less	11VDC or less
Input response time	ON response time	15ms or less	1/5/10/20/70ms or less
	OFF response time	15ms or less	1/5/10/20/70ms or less
Isolation method		Photocoupler isolation	Photocoupler isolation
External connection		38P terminal block	40P terminal block
No. of points per common (Note 1)		8 points (4 circuits)	32 points (1 circuit)
Internal current consumption		160mA or less	75mA

Specification \ Model		SYSMAC C series C500-ID218 (Sink/Source common type)	MELSEC-Q series QX41 (Sink type)	MELSEC-Q series QX41-S1 (Sink type)
No. of input points		32 points	32 points	32 points
Input voltage		12 to 24VDC	24VDC	24VDC
Input current		10mA/24VDC	Approx. 4mA/24VDC	Approx. 4mA/24VDC
Operating voltage	ON voltage	10.2VDC or more	19VDC or more	19VDC or more
	OFF voltage	3VDC or less	11VDC or less	9.5VDC or less
Input response time	ON response time	1.5ms or less	1/5/10/20/70ms or less	0.1/0.2/0.4/0.6/1ms
	OFF response time	1.5ms or less	1/5/10/20/70ms or less	0.1/0.2/0.4/0.6/1ms
Isolation method		Photocoupler isolation	Photocoupler isolation	Photocoupler isolation
External connection		38P terminal block	40P terminal block	40P terminal block
No. of points per common (Note 1)		8 points (4 circuits)	32 points (1 circuit)	32 points (1 circuit)
Internal current consumption		260mA or less	75mA	75mA

Notes
1. In a case where the number of points per common changes from eight (four circuits) to 32 and the terminal numbers A8, A17, B8 and B17 on the SYSMAC C series side are used separately, a wiring change is required.
2. Only the sink type is compatible.
3. For ▭ areas, verify that the MELSEC-Q series module specifications satisfy the specifications of the connected device/equipment.
4. For detailed and general specifications not described in the input module specification comparison chart, refer to the user's manual of the input module used.

4) ERNT-CQCX218501 Connector (24P) × 2 + Terminal block (4P)→Connector (40P)

Conversion adapter model	SYSMAC C series module model	No. of input points	MELSEC-Q series module model
ERNT-CQCX218501	C500-ID218CN	32 points	QX41, QX41-S1
	C500-ID501CN		QX71

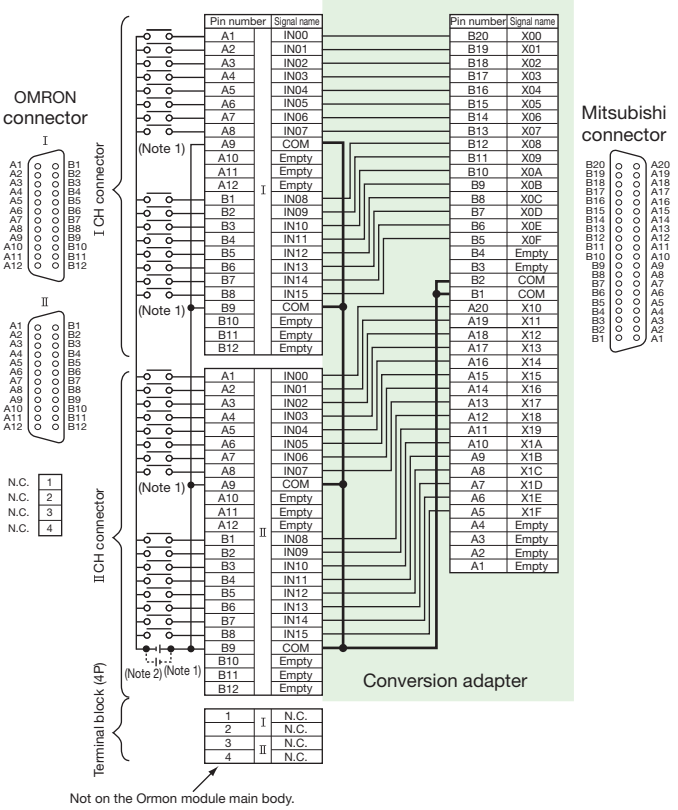

[Input module specification comparison chart]

Specification \ Model		SYSMAC C series C500-ID218CN (Sink/Source common type)	MELSEC-Q series QX41 (Sink type)	MELSEC-Q series QX41-S1 (Sink type)
No. of input points		32 points	32 points	32 points
Input voltage		12 to 24VDC	24VDC	24VDC
Input current		10mA/24VDC	Approx. 4mA/24VDC	Approx. 4mA/24VDC
Operating voltage	ON voltage	10.2VDC or more	19VDC or more	19VDC or more
	OFF voltage	3VDC or less	11VDC or less	9.5VDC or less
Input response time	ON response time	1.5ms or less	1/5/10/20/70ms or less	0.1/0.2/0.4/0.6/1ms
	OFF response time	1.5ms or less	1/5/10/20/70ms or less	0.1/0.2/0.4/0.6/1ms
Isolation method		Photocoupler isolation	Photocoupler isolation	Photocoupler isolation
External connection		24P connector × 2	40P connector	40P connector
No. of points per common (Note 1)		8 points (4 circuits)	32 points (1 circuit)	32 points (1 circuit)
Internal current consumption		200mA or less	75mA	75mA

Specification \ Model		SYSMAC C series C500-ID501CN (Sink/Source common type)	MELSEC-Q series QX71 (Sink/Source common type)
No. of input points		32 points	32 points
Input voltage		5VDC	5VDC/12VDC
Input current		3.5mA/5VDC	Approx. 1.2mA/5VDC
Operating voltage	ON voltage	3VDC or more	3.5VDC or more
	OFF voltage	1VDC or less	1VDC or less
Input response time	ON response time	1.5ms or less	1/5/10/20/70ms or less
	OFF response time	1.5ms or less	1/5/10/20/70ms or less
Isolation method		Photocoupler isolation	Photocoupler isolation
External connection		24P connector × 2	40P connector
No. of points per common (Note 1)		8 points (4 circuits)	32 points (1 circuit)
Internal current consumption		200mA or less	70mA

Notes
1. In a case where the number of points per common changes from eight (four circuits) to 32 and the terminal numbers A9 and B9 of I as well as A9 and B9 of II on the SYSMAC C series side are used separately, a wiring change is required.
2. C500-ID218CN → QX41/QX41-S1 conversion is sink type compatible only.
3. For ▭ areas, verify that the MELSEC-Q series module specifications satisfy the specifications of the connected device/equipment.
4. For detailed and general specifications not described in the input module specification comparison chart, refer to the user's manual of the input module used.

5) ERNT-CQCX114219 Connector (40P) × 2→Connector (40P) × 2

Conversion adapter model	SYSMAC C series module model	No. of input points	MELSEC-Q series module model
ERNT-CQCX114219	C500-ID114	64 points	QX72
	C500-ID219		QX42, QX42-S1, QX82

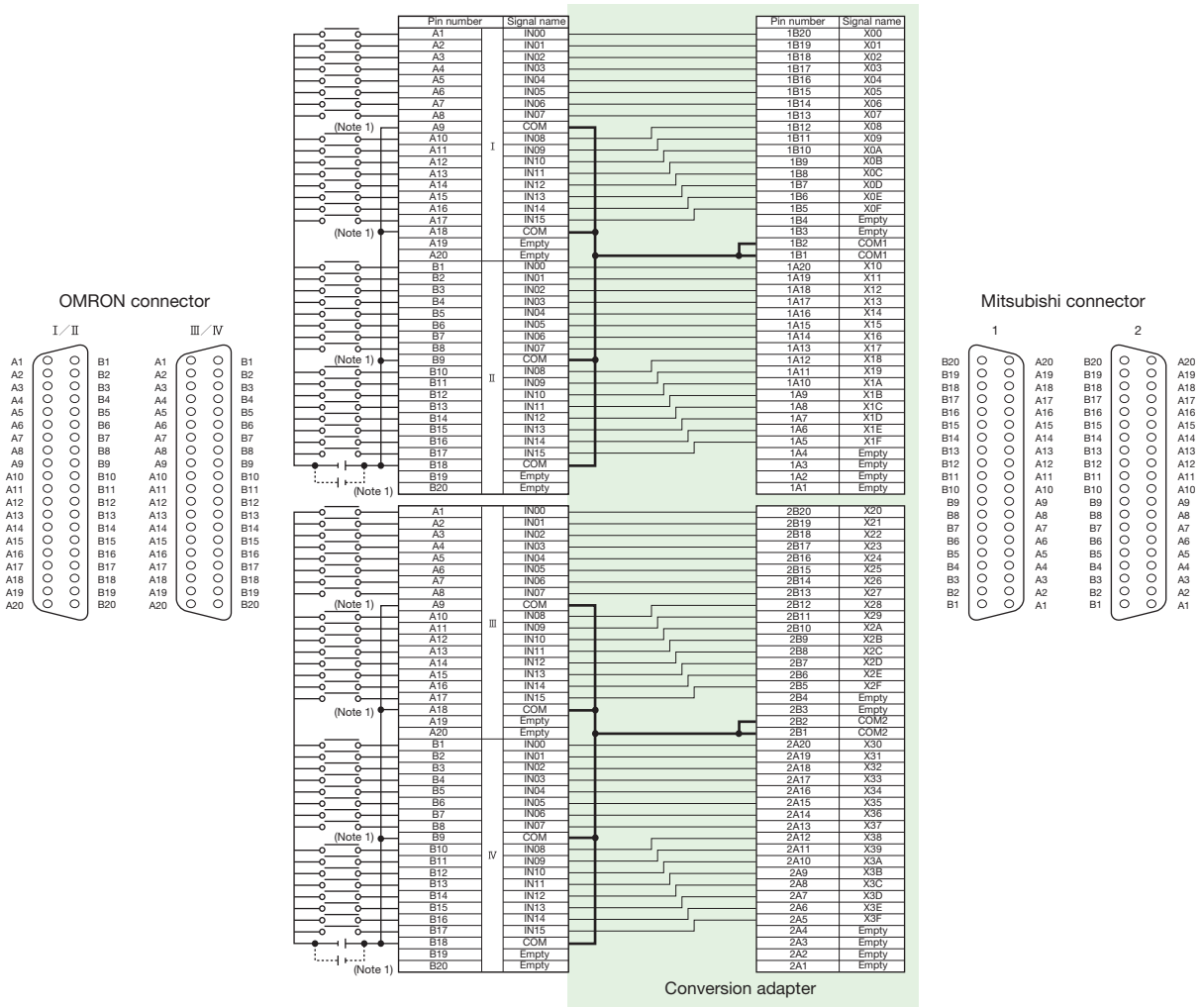

[Input module specification comparison chart]

Specification \ Model		SYSMAC C series C500-ID114 (Sink/Source common type)	MELSEC-Q series QX72 (Sink/Source common type)
No. of input points		64 points	64 points
Input voltage		12VDC	5/12VDC
Input current		7mA/12VDC	Approx. 3.3mA/12VDC
Operating voltage	ON voltage	8VDC or more	3.5VDC or more
	OFF voltage	3VDC or less	1VDC or less
Input response time	ON response time	1.5ms or less	1/5/10/20/70ms or less
	OFF response time	1.5ms or less	1/5/10/20/70ms or less
Isolation method		Photocoupler isolation	Photocoupler isolation
External connection		40P connector × 2	40P connector × 2
No. of points per common (Note 1)		8 points (8 circuits)	32 points (2 circuits)
Internal current consumption		340mA or less	85mA

Specification \ Model		SYSMAC C series C500-ID219 (Sink/Source common type)	MELSEC-Q series QX42 (Sink type)	QX42-S1 (Sink type)	QX82 (Source type)
No. of input points		64 points	64 points	64 points	64 points
Input voltage		24VDC	24VDC	24VDC	24VDC
Input current		7mA/24VDC	Approx. 4mA/24VDC	Approx. 4mA/24VDC	Approx. 4mA/24VDC
Operating voltage	ON voltage	16VDC or more	19VDC or more	19VDC or more	19VDC or more
	OFF voltage	5VDC or less	11VDC or less	9.5VDC or less	11VDC or less
Input response time	ON response time	1.5ms or less	1/5/10/20/70ms or less	0.1/0.2/0.4/0.6/1ms	1/5/10/20/70ms or less
	OFF response time	1.5ms or less	1/5/10/20/70ms or less	0.1/0.2/0.4/0.6/1ms	1/5/10/20/70ms or less
Isolation method		Photocoupler isolation	Photocoupler isolation	Photocoupler isolation	Photocoupler isolation
External connection		40P connector × 2	40P connector × 2	40P connector × 2	40P connector × 2
No. of points per common (Note 1)		8 points (8 circuits)	32 points (2 circuits)	32 points (2 circuits)	32 points (2 circuits)
Internal current consumption		340mA or less	90mA	90mA	90mA

Notes
1. In a case where the number of points per common changes from eight (eight circuits) to 32 (two circuits) and the terminal numbers A9 and A18 of I, B9 and B18 of II, A9 and A18 of III, and B9 and B18 of IV on the SYSMAC C series side are used separately, a wiring change is required.
2. For ☐ areas, verify that the MELSEC-Q series module specifications satisfy the specifications of the connected device/equipment.
3. For detailed and general specifications not described in the input module specification comparison chart, refer to the user's manual of the input module used.

6) ERNT-CQTY221 Terminal block (20P)→Terminal block (18P)

Conversion adapter model	SYSMAC C series module model	No. of output points	MELSEC-Q series module model
ERNT-CQTY221	C500-OC221	16 points	QY10

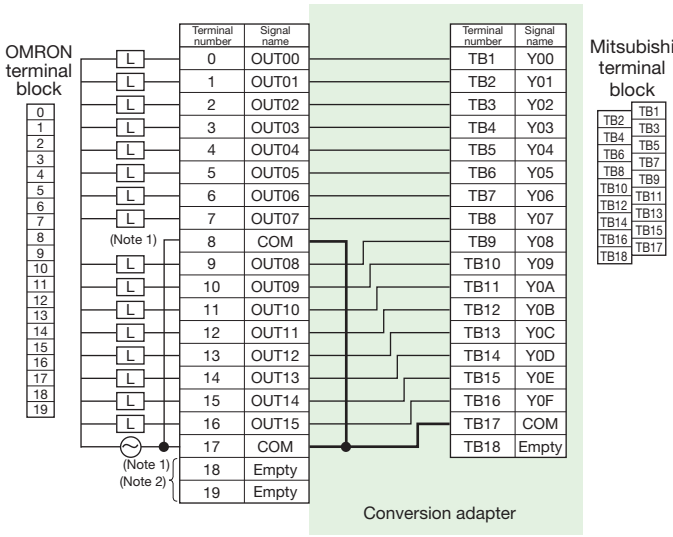

[Output module specification comparison chart]

Specification \ Model	SYSMAC C series C500-OC221	MELSEC-Q series QY10
No. of output points	16 points	16 points
Switching capacity	250VAC/2A (COSΦ=1) 250VAC/0.5A (COSΦ=0.4) 24VDC/2A (8A/common, 16A/module)	240VAC/2A (COSΦ=1) 24VDC/2A (Resistance load) (8A/common)
Output response time: ON response time	15ms or less	10ms or less
Output response time: OFF response time	15ms or less	12ms or less
External connection	20P terminal block	18P terminal block
No. of points per common (Note 1)	8 points (2 circuits)	16 points (1 circuit)
Leakage current	–	–
Surge suppressor	No	No
Fuse	No	No
Internal current consumption	100mA or less	430mA

Notes
1. In a case where the number of points per common changes from eight (two circuits) to 16 (one circuit) and the terminal numbers 8 and 17 on the SYSMAC C series side are used separately, a wiring change is required.
2. The external power supply connected to terminal numbers 18 and 19 on the SYSMAC C series side is not required.
3. For ▭ areas, verify that the MELSEC-Q series module specifications satisfy the specifications of the connected device/equipment.
4. For detailed and general specifications not described in the output module specification comparison chart, refer to the user's manual of the output module used.

7) ERNT-CQTY226 Terminal block (20P)→Terminal block (18P)

Conversion adapter model	SYSMAC C series module model	No. of output points	MELSEC-Q series module model
ERNT-CQTY226	C500-OA121 C500-OA222 C500-OA226	16 points	QY22

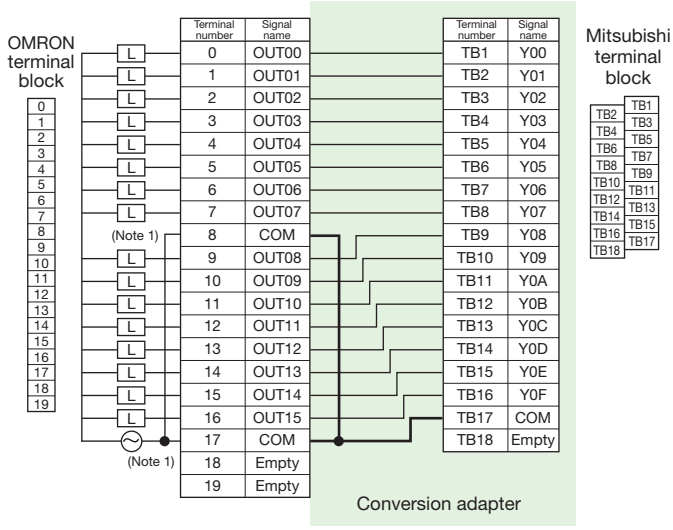

[Output module specification comparison chart]

Specification \ Model	SYSMAC C series C500-OA121	MELSEC-Q series QY22
No. of output points	16 points	16 points
Switching capacity	132VAC/1A (4A/common, 5A/module)	100 to 240VAC/0.6A (4.8A/common)
Output response time: ON response time	1ms or less	1ms + 0.5Hz or less
Output response time: OFF response time	1/2 the load frequency or less	1ms + 0.5Hz or less
External connection	20P terminal block	18P terminal block
No. of points per common (Note 1)	8 points (2 circuits)	16 points (1 circuit)
Leakage current	3mA or less/100VAC	1.5mA or less/120VAC 3mA or less/240VAC
Surge suppressor	Yes	Yes
Fuse	Yes	No
Internal current consumption	300mA or less	250mA

Specification \ Model	SYSMAC C series C500-OA222	MELSEC-Q series QY22
No. of output points	16 points	16 points
Switching capacity	250VAC/1A (4A/common, 5A/module)	100 to 240VAC/0.6A (4.8A/common)
Output response time: ON response time	1ms or less	1ms + 0.5Hz or less
Output response time: OFF response time	1/2 the load frequency or less	1ms + 0.5Hz or less
External connection	20P terminal block	18P terminal block
No. of points per common (Note 1)	8 points (2 circuits)	16 points (1 circuit)
Leakage current	3mA or less/100VAC 6mA or less/200VAC	1.5mA or less/120VAC 3mA or less/240VAC
Surge suppressor	Yes	Yes
Fuse	Yes	No
Internal current consumption	300mA or less	250mA

Specification \ Model	SYSMAC C series C500-OA226	MELSEC-Q series QY22
No. of output points	16 points	16 points
Switching capacity	250VAC/1.2A (4A/common, 5A/module)	100 to 240VAC/0.6A (4.8A/common)
Output response time: ON response time	1ms or less	1ms + 0.5Hz or less
Output response time: OFF response time	1/2 the load frequency or less	1ms + 0.5Hz or less
External connection	20P terminal block	18P terminal block
No. of points per common (Note 1)	8 points (2 circuits)	16 points (1 circuit)
Leakage current	1.5mA or less/120VAC 3.5mA or less/240VAC	1.5mA or less/120VAC 3mA or less/240VAC
Surge suppressor	Yes	Yes
Fuse	Yes	No
Internal current consumption	450mA or less	250mA

Notes
1. In a case where the number of points per common changes from eight (two circuits) to 16 (one circuit) and the terminal numbers 8 and 17 on the SYSMAC C series side are used separately, a wiring change is required.
2. For ▭ areas, verify that the MELSEC-Q series module specifications satisfy the specifications of the connected device/equipment.
3. For detailed and general specifications not described in the output module specification comparison chart, refer to the user's manual of the output module used.

8) ERNT-CQTY219217 Terminal block (20P)→Terminal block (18P)

Conversion adapter model	SYSMAC C series module model	No. of output points	MELSEC-Q series module model
ERNT-CQTY219217	C500-OD219 C500-OD217	16 points	QY40P, QY50

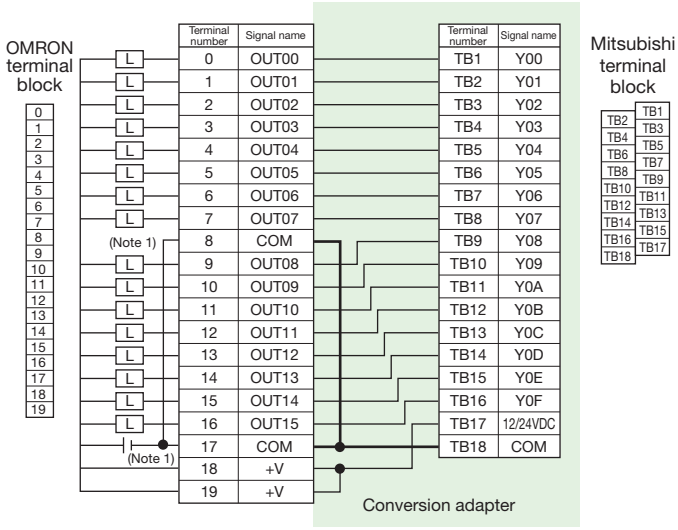

[Output module specification comparison chart]

Specification \ Model		SYSMAC C series	MELSEC-Q series	
		C500-OD219	QY40P	QY50
No. of output points		16 points	16 points	16 points
Switching capacity		12 to 24VDC/2.1A (8A/common, 16A/module)	12 to 24VDC/0.1A (1.6A/common)	12 to 24VDC/0.5A (4A/common)
Output response time	ON response time	0.2ms or less	1ms or less	1ms or less
	OFF response time	0.4ms or less	1ms or less	1ms or less
External connection		20P terminal block	18P terminal block	18P terminal block
No. of points per common (Note 1)		8 points (2 circuits)	16 points (1 circuit)	16 points (1 circuit)
Leakage current		0.1mA or less	0.1mA or less	0.1mA or less
Surge suppressor		Yes	Yes	Yes
Fuse		Yes	No (with protection)	Yes
Internal current consumption		160mA or less	65mA	80mA

Specification \ Model		SYSMAC C series	MELSEC-Q series	
		C500-OD217	QY40P	QY50
No. of output points		16 points	16 points	16 points
Switching capacity		12 to 24VDC/1A (4A/common, 5A/module)	12 to 24VDC/0.1A (1.6A/common)	12 to 24VDC/0.5A (4A/common)
Output response time	ON response time	0.2ms or less	1ms or less	1ms or less
	OFF response time	0.3ms or less	1ms or less	1ms or less
External connection		20P terminal block	18P terminal block	18P terminal block
No. of points per common (Note 1)		8 points (2 circuits)	16 points (1 circuit)	16 points (1 circuit)
Leakage current		0.1mA or less	0.1mA or less	0.1mA or less
Surge suppressor		Yes	Yes	Yes
Fuse		Yes	No (with protection)	Yes
Internal current consumption		160mA or less	65mA	80mA

Notes
1. In a case where the number of points per common changes from eight (two circuits) to 16 and the terminal numbers 8 and 17 as well as 18 and 19 on the SYSMAC C series side are used separately, a wiring change is required.
2. For ▭ areas, verify that the MELSEC-Q series module specifications satisfy the specifications of the connected device/equipment.
3. For detailed and general specifications not described in the input module specification comparison chart, refer to the user's manual of the input module used.

9) ERNT-CQTY411 Terminal block (20P)→Terminal block (18P)

Conversion adapter model	SYSMAC C series module model	No. of output points	MELSEC-Q series module model
ERNT-CQTY411	C500-OD411	16 points	QY40P, QY50

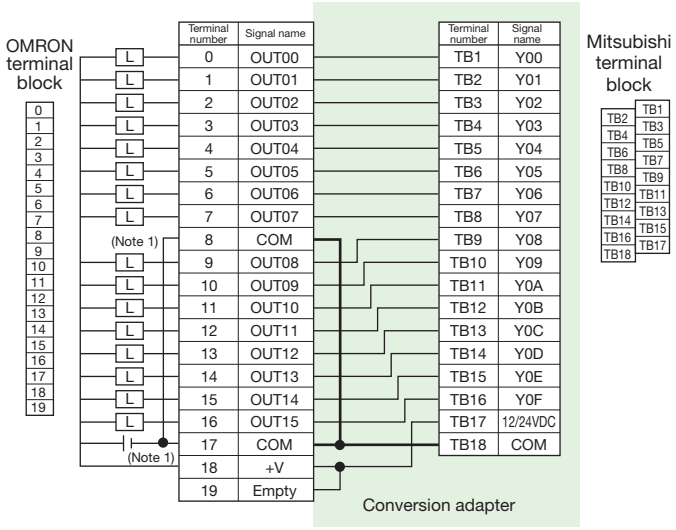

[Output module specification comparison chart]

Specification \ Model		SYSMAC C series	MELSEC-Q series	
		C500-OD411	QY40P	QY50
No. of output points		16 points	16 points	16 points
Switching capacity		12 to 48VDC/1A (4A/common, 5A/module)	12 to 24VDC/0.1A (1.6A/common)	12 to 24VDC/0.5A (4A/common)
Output response time	ON response time	0.2ms or less	1ms or less	1ms or less
	OFF response time	0.3ms or less	1ms or less	1ms or less
External connection		20P terminal block	18P terminal block	18P terminal block
No. of points per common (Note 1)		16 points (1 circuit)	16 points (1 circuit)	16 points (1 circuit)
Leakage current		0.1mA or less	0.1mA or less	0.1mA or less
Surge suppressor		No	Yes	Yes
Fuse		Yes	No (with protection)	Yes
Internal current consumption		160mA or less	65mA	80mA

Notes
1. Be sure to use terminal number 19 of the SYSMAC C series terminal block as an empty terminal (not connected). (Reason: Terminal numbers 18 and 19 are short-circuited inside the conversion adapter.)
2. For ▭ areas, verify that the MELSEC-Q series module specifications satisfy the specifications of the connected device/equipment.
3. For detailed and general specifications not described in the output module specification comparison chart, refer to the user's manual of the output module used.

10) ERNT-CQTY412 Terminal block (38P)→Connector (40P)

Conversion adapter model	SYSMAC C series module model	No. of output points	MELSEC-Q series module model
ERNT-CQTY412	C500-OD412	32 points	QY41P

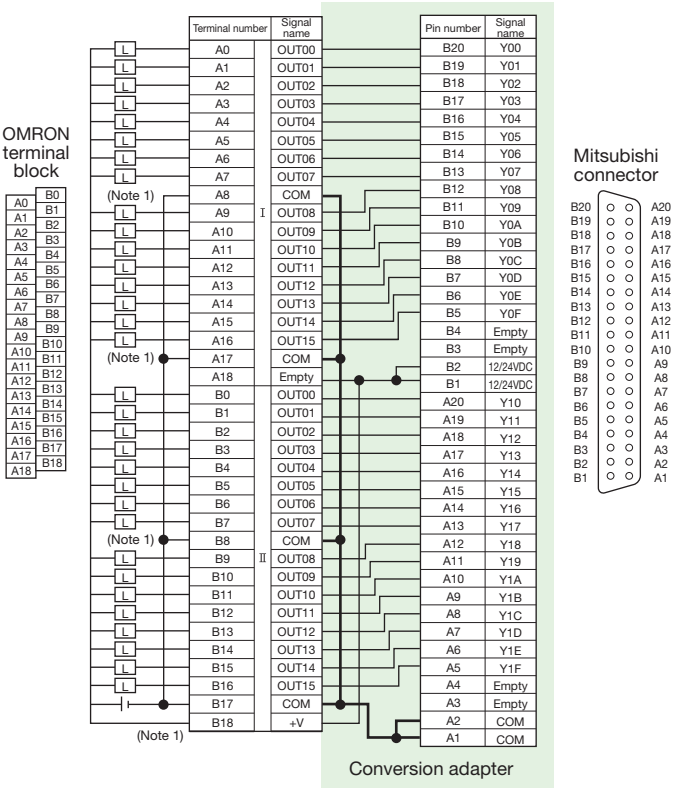

[Output module specification comparison chart]

Specification \ Model		SYSMAC C series	MELSEC-Q series
		C500-OD412	QY41P
No. of output points		32 points	32 points
Switching capacity		12 to 48VDC / 0.3A (4.8A/module)	12 to 24VDC / 0.1A (2A/common)
Output response time	ON response time	0.2ms or less	1ms or less
	OFF response time	0.3ms or less	1ms or less
External connection		38P terminal block	40P connector
No. of points per common (Note 1)		32 points (1 circuit)	32 points (1 circuit)
Leakage current		0.1mA or less	0.1mA or less
Surge suppressor		No	Yes
Fuse		Yes	No (with protection)
Internal current consumption		230mA or less	105mA

Notes
1. Be sure to use terminal number A18 of the SYSMAC C terminal block series as an empty terminal (not connected). (Reason: Terminal numbers A18 and B18 are short-circuited inside the conversion adapter.)
2. For ▭ areas, verify that the MELSEC-Q series module specifications satisfy the specifications of the connected device/equipment.
3. For detailed and general specifications not described in the output module specification comparison chart, refer to the user's manual of the output module used.

11) ERNT-CQTY414218 Terminal block (38P)→Connector (40P)

Conversion adapter model	SYSMAC C series module model	No. of output points	MELSEC-Q series module model
ERNT-CQTY414218	C500-OD414 C500-OD218	32 points	QY41P

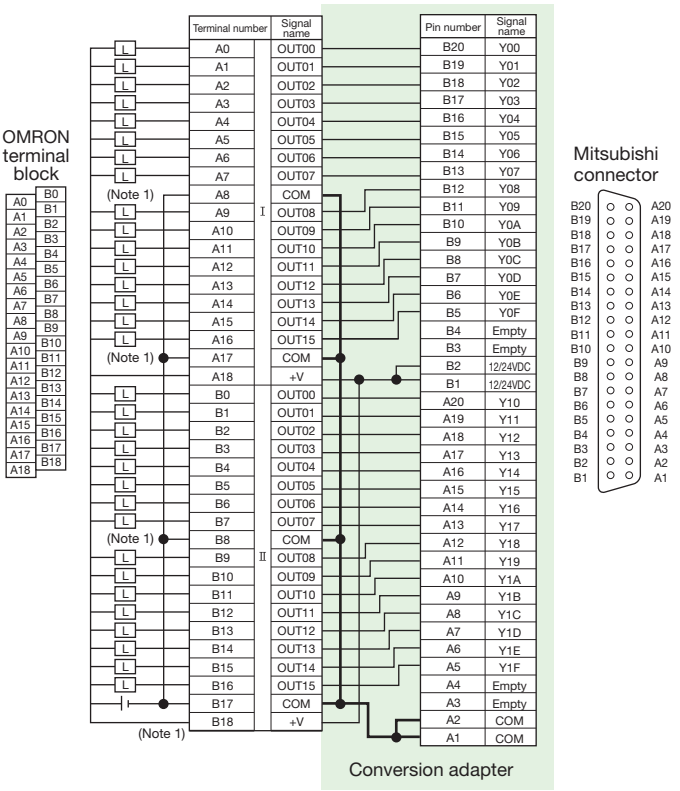

[Output module specification comparison chart]

Specification \ Model		SYSMAC C series	MELSEC-Q series
		C500-OD414	QY41P
No. of output points		32 points	32 points
Switching capacity		12 to 48VDC / 0.3A (2.4A/common, 4.8A/module)	12 to 24VDC / 0.1A (2A/common)
Output response time	ON response time	0.2ms or less	1ms or less
	OFF response time	0.3ms or less	1ms or less
External connection		38P terminal block	40P connector
No. of points per common (Note 1)		16 points (2 circuits)	32 points (1 circuit)
Leakage current		0.1mA or less	0.1mA or less
Surge suppressor		No	Yes
Fuse		No	No (with protection)
Internal current consumption		230mA or less	105mA

Specification \ Model		SYSMAC C series	MELSEC-Q series
		C500-OD218	QY41P
No. of output points		32 points	32 points
Switching capacity		12 to 24VDC / 0.3A (2.4A/common, 4.8A/module)	12 to 24VDC / 0.1A (2A/common)
Output response time	ON response time	0.2ms or less	1ms or less
	OFF response time	0.3ms or less	1ms or less
External connection		38P terminal block	40P connector
No. of points per common (Note 1)		16 points (2 circuits)	32 points (1 circuit)
Leakage current		0.1mA or less	0.1mA or less
Surge suppressor		Yes	Yes
Fuse		Yes	No (with protection)
Internal current consumption		230mA or less	105mA

Notes
1. In a case where the number of points per common changes from 16 (two circuits) to 32 (one circuit) and the terminal numbers A8, A17, B8, and B17 as well as A18 and B18 on the SYSMAC C series side are used separately, a wiring change is required.
2. For ▭ areas, verify that the MELSEC-Q series module specifications satisfy the specifications of the connected device/equipment.
3. For detailed and general specifications not described in the output module specification comparison chart, refer to the user's manual of the output module used.

12) ERNT-CQCY415 Connector (24P) × 2 + Terminal block (4P)→Connector (40P)

Conversion adapter model	SYSMAC C series module model	No. of output points	MELSEC-Q series module model
ERNT-CQCY415	C500-OD415CN	32 points	QY41P

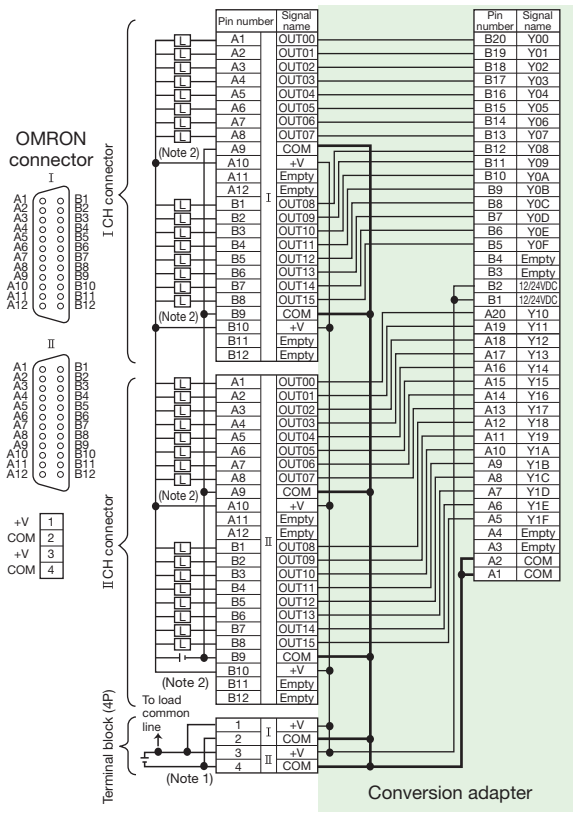

[Output module specification comparison chart]

Specification \ Model		SYSMAC C series	MELSEC-Q series
		C500-OD415CN	QY41P
No. of output points		32 points	32 points
Switching capacity		12 to 48VDC / 0.3A (2.4A/common, 4.8A/module)	12 to 24VDC / 0.1A (2A/common)
Output response time	ON response time	0.2ms or less	1ms or less
	OFF response time	0.3ms or less	1ms or less
External connection		24P connector × 2 + Terminal block	40P connector
No. of points per common (Note 1)		16 points (2 circuits)	32 points (1 circuit)
Leakage current		0.1mA or less	0.1mA or less
Surge suppressor		No	Yes
Fuse		No	No (with protection)
Internal current consumption		230mA or less	105mA

Notes
1. In a case where the wiring of the power common line when C500-OD415CN is used uses a terminal block (4P), the power supply common line needs to be removed from the terminal block and rewired to the terminal block (4P) of this conversion adapter.
2. In a case where the number of points per common changes from 16 (two circuits) to 32 (one circuit) and the pin numbers A9 and B9 of I, A9 and B9 of II, A10 and B10 of I, A10 and B10 of II, and 1 and 3 as well as 2 and 4 of the terminal block (4P) on the SYSMAC-C series side are used separately, a wiring change is required.
3. For ▭ areas, verify that the MELSEC-Q series module specifications satisfy the specifications of the connected device/equipment.
4. For detailed and general specifications not described in the output module specification comparison chart, refer to the user's manual of the output module used.

13) ERNT-CQCY501 Connector (24P) × 2 + Terminal block (4P)→Connector (40P)

Conversion adapter model	SYSMAC C series module model	No. of output points	MELSEC-Q series module model
ERNT-CQCY501	C500-OD501CN	32 points	QY71

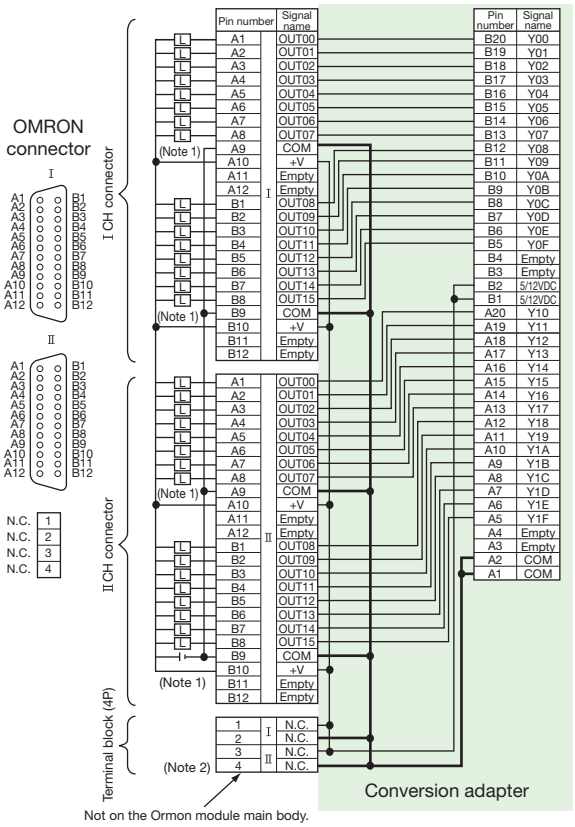

[Output module specification comparison chart]

Specification \ Model		SYSMAC C series	MELSEC-Q series
		C500-OD501CN	QY71
No. of output points		32 points	32 points
Switching capacity		5VDC / 35mA	5 to 12VDC / 16mA 512mA/common
Output response time	ON response time	0.2ms or less	0.5ms or less
	OFF response time	0.3ms or less	0.5ms or less
External connection		24P connector × 2	40P connector
No. of points per common (Note 1)		8 points (4 circuits)	32 points (1 circuit)
Leakage current		0.1mA or less	–
Surge suppressor		No	No
Fuse		No	Yes
Internal current consumption		250mA or less	150mA

Notes
1. In a case where the number of points per common changes from 8 (four circuits) to 32 (one circuit) and the pin numbers A9 and B9 of I, A9 and B9 of II, A10 and B10 of I, as well as A10 and B10 of II on the SYSMAC C series side are used separately, a wiring change is required.
2. Be sure to use the terminal block (4P) of the SYSMAC C series of the conversion adapter as an empty terminal (not connected). (Reason: A short-circuit is created with the power supply common inside the conversion adapter.)
3. For ▭ areas, verify that the MELSEC-Q series module specifications satisfy the specifications of the connected device/equipment.
4. For detailed and general specifications not described in the output module specification comparison chart, refer to the user's manual of the output module used.

14) ERNT-CQCY213 Connector (40P) × 2 →Connector (40P) × 2

Conversion adapter model	SYSMAC C series module model	No. of input points	MELSEC-Q series module model
ERNT-CQCY213	C500-OD213	64 points	QY42P

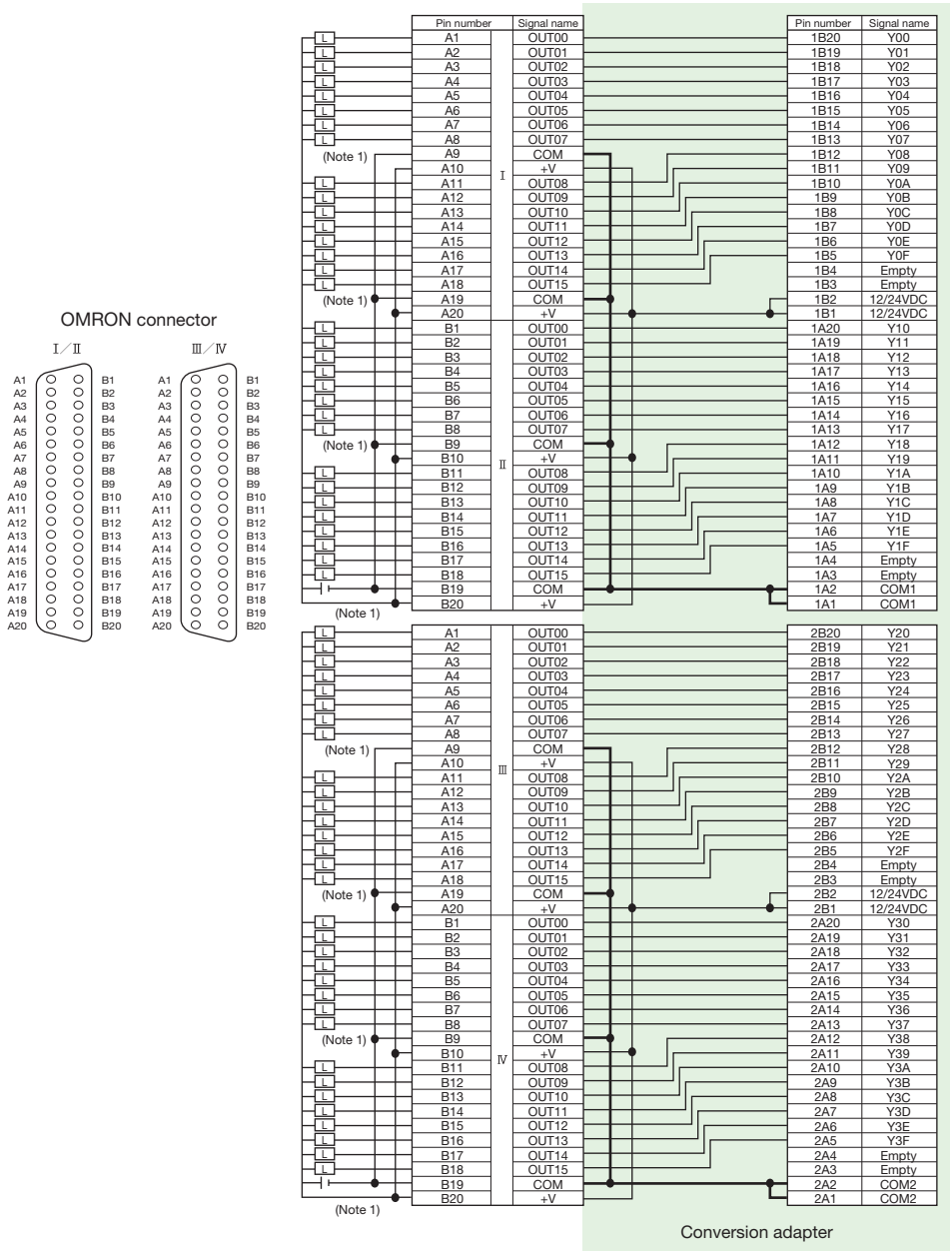

[Output module specification comparison chart]

Specification \ Model		SYSMAC C series C500-OD213	MELSEC-Q series QY42P
No. of output points		64 points	64 points
Switching capacity		4.5VDC / 16mA to 26.4V / 100mA (800mA/common, 6.4A/module)	12 to 24VDC / 0.1A 2A/common
Output response time	ON response time	0.2ms or less	1ms or less
	OFF response time	0.3ms or less	1ms or less
External connection		40P connector × 2	40P connector × 2
No. of points per common (Note 1)		8 points (8 circuits)	32 points (2 circuits)
Leakage current		0.1mA or less	0.1mA or less
Surge suppressor		No	Yes
Fuse		Yes	No (with protection)
Internal current consumption		460mA or less	150mA

Notes
1. In a case where the number of points per common changes from eight (eight circuits) to 32 (two circuits) and the pin numbers A9, A10, A19 and A20 of I, B9, B10, B19 and B20 of II, A9, A10, A19 and A20 of III, as well as B9, B10, B19, and B20 of IV on the SYSMAC C series side are used separately, a wiring change is required.
2. For areas, verify that the MELSEC-Q series module specifications satisfy the specifications of the connected device/equipment.
3. For detailed and general specifications not described in the output module specification comparison chart, refer to the user's manual of the output module used.

2-slot type

1) ERNT-CQTX122

Conversion adapter model	SYSMAC C series module model	No. of input points	MELSEC-Q series module model	No. of required modules
ERNT-CQTX122	C500-IA122	32 points	QX10	2 modules

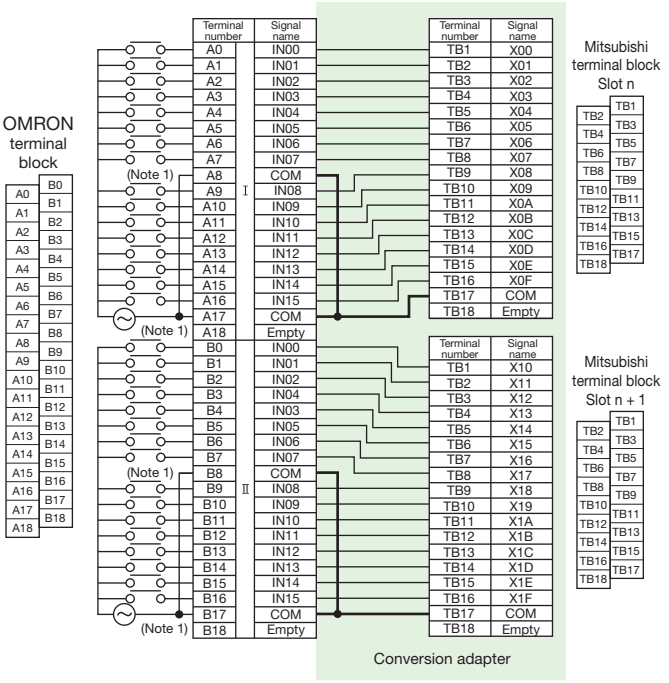

[Input module specification comparison chart]

Specification \ Model	SYSMAC C series	MELSEC-Q series
	C500-IA122	QX10
No. of input points	32 points	16 points
Rated input voltage	100 to 120VAC (+10/-15%) 50/60Hz	100 to 120VAC (+10/-15%) 50/60Hz (±3Hz)
Rated input current	10mA TYP (100VAC)	Approx. 8mA (100VAC, 60Hz) Approx. 7mA (100VAC, 50Hz)
ON voltage	60VAC, minimum	80VAC or more
OFF voltage	20VAC, maximum	30VAC or less
Response time OFF→ON	35ms or less	15ms or less (100VAC, 50Hz, 60Hz)
Response time ON→OFF	55ms or less	20ms or less (100VAC, 50Hz, 60Hz)
Isolation method	Photocoupler isolation	Photocoupler isolation
Internal current consumption	5VDC, 60mA or less	50mA (TYP. all points ON)
No. of points per common	8 points/common	16 points/common
External interface	38-point terminal block	18-point terminal block

Notes
1. In a case where the number of points per common changes from eight (four circuits) to 16 (two modules) and the terminal numbers A8 and A17 as well as B8 and B17 on the SYSMAC C series side are used separately, a wiring change is required.
2. For ▭ areas, verify that the MELSEC-Q series module specifications satisfy the specifications of the connected device/equipment.

2) ERNT-CQTY224 Connector (40P) × 2→Connector (40P) × 2

Conversion adapter model	SYSMAC C series module model	No. of output points	MELSEC-Q series module model	No. of required modules
ERNT-CQTY224	C500-OC224	32 points	QY10	2 modules

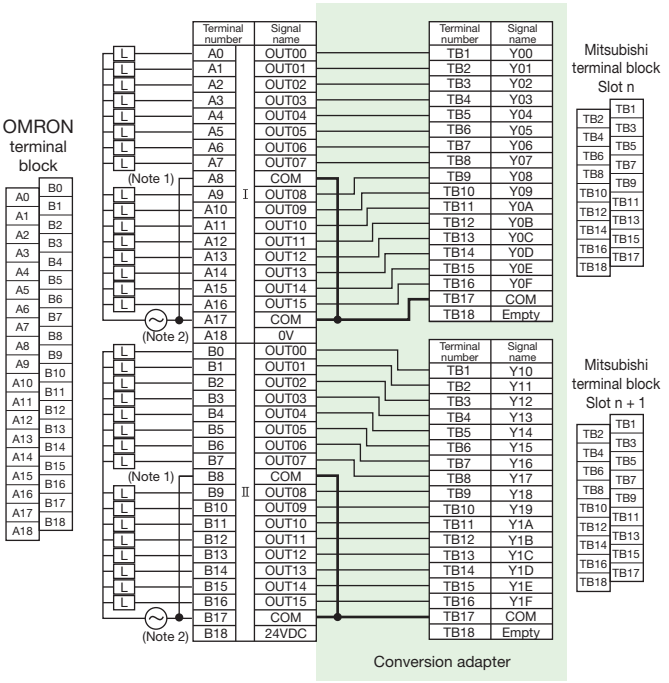

[Output module specification comparison chart]

Specification \ Model	SYSMAC C series	MELSEC-Q series
	C500-OC224	QY10
No. of output points	32 points	16 points
Switching capacity	250VAC/2A (COS Φ=1), 250VAC/0.5A (COS Φ=0.4) 24VDC/2A (8A/common, 32A/common)	24VDC 2A/point (Resistance load) 240VAC 2A/point (COS Φ=1) 8A/common
Response time OFF→ON	15ms or less	10ms or less
Response time ON→OFF	15ms or less	12ms or less
Surge suppressor	No	No
Fuse	No	No
Leakage current	–	–
Internal current consumption	5VDC, 200mA or less	430mA (TYP. all points ON)
No. of points per common	8 points/common	16 points/common
External interface	38-point terminal block	18-point terminal block

Notes
1. In a case where the number of points per common changes from eight (four circuits) to 16 (two modules) and the terminal numbers A8 and A17 as well as B8 and B17 on the SYSMAC C series side are used separately, a wiring change is required.
2. The external power supply connected to terminal numbers A18 and B18 on the SYSMAC C series side is not required.
3. For ▭ areas, verify that the MELSEC-Q series module specifications satisfy the specifications of the connected device/equipment.

3) ERNT-CQTY225

Conversion adapter model	SYSMAC C series module model	No. of output points	MELSEC-Q series module model	No. of required modules
ERNT-CQTY225	C500-OA225	32 points	QY22	2 modules

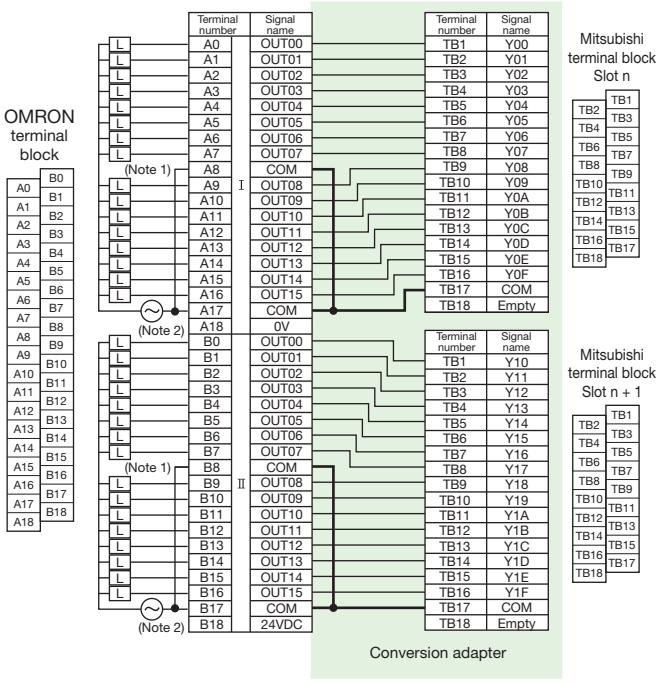

[Output module specification comparison chart]

Specification \ Model		SYSMAC C series	MELSEC-Q series
		C500-OA225	QY22
No. of output points		32 points	16 points
Switching capacity		250VAC/1A (with restrictions) 50/60Hz	100 to 240VAC (+10/-15%) 0.6A/point, 4.8A/common
Response time	OFF→ON	1ms or less	1ms + 0.5Hz or less
	ON→OFF	1/2 the load frequency or less	1ms + 0.5Hz or less (Rated load, resistance load)
Surge suppressor		–	CR absorber
Fuse		Yes	No (Fuse installation with external wiring recommended)
Leakage current		2mA (100VAC) or less, 5mA (200VAC) or less	1.5mA or less (at 120V, 60Hz) 3mA or less (at 240V, 60Hz)
Internal current consumption		5VDC, 200mA or less	250mA (MAX. all points ON)
No. of points per common		8 points/common	16 points/common
External interface		38-point terminal block	18-point terminal block

Notes
1. In a case where the number of points per common changes from eight (four circuits) to 16 (two modules) and the terminal numbers A8 and A17 as well as B8 and B17 on the SYSMAC C series side are used separately, a wiring change is required.
2. The external power supply connected to terminal numbers A18 and B18 on the SYSMAC C series side is not required.
3. For ▭ areas, verify that the MELSEC-Q series module specifications satisfy the specifications of the connected device/equipment.

4) ERNT-CQTY218

Conversion adapter model	SYSMAC C series module model	No. of output points	MELSEC-Q series module model	No. of required modules
ERNT-CQTY218	C500-OD218 C500-OD414	32 points	QY50	2 modules

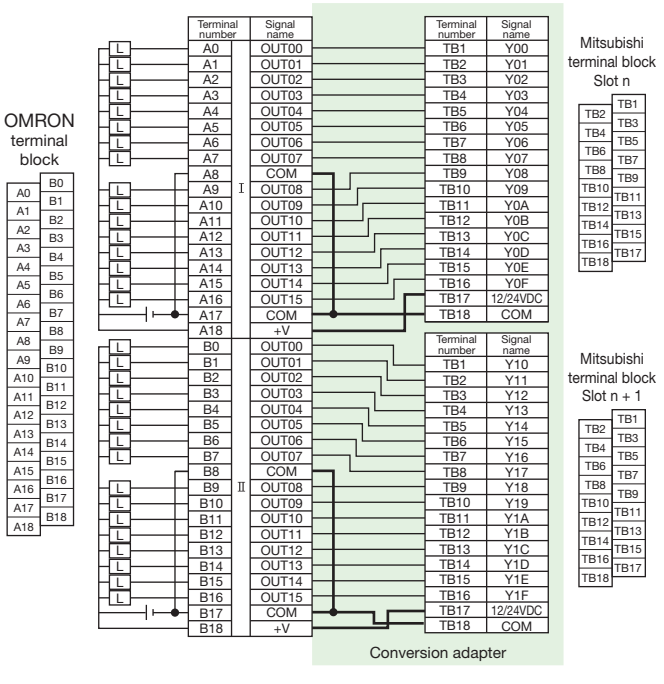

[Output module specification comparison chart]

Specification \ Model		SYSMAC C series		MELSEC-Q series
		C500-OD218	C500-OD414	QY50
No. of output points		32 points		16 points
Switching capacity		12 to 24VDC +10%, -15% 0.3A (2.4A/common, 4.8A/module)	12 to 48VDC +10%, -15% 0.3A (2.4A/common, 4.8A/module)	12 to 24VDC 0.5A/point, 4A/common
Response time	OFF→ON	0.2ms or less		1ms or less
	ON→OFF	0.3ms or less		1ms or less (Rated load, resistance load)
Surge suppressor		Yes	No	Zener diode
Fuse		No		Yes
Leakage current		0.1mA or less		0.1mA or less
Internal current consumption		5VDC, 230mA or less		80mA (TYP. all points ON)
No. of points per common		16 points/common		16 points/common
External interface		38-point terminal block		18-point terminal block

Notes
1. For ▭ areas, verify that the MELSEC-Q series module specifications satisfy the specifications of the connected device/equipment.

Base Adapter

Specifications

The base adapter allows installation of the MELSEC-Q series and conversion adapter support flange using the mounting holes for the SYSMAC C series base unit (additional drilling of holes is not required).

Base adapter model	Specifications		
	SYSMAC C series compatible module	MELSEC-Q series compatible module	Mountable conversion adapter support flange
ERNT-CQB081	C500-BC081/082 C500-BC091 C2000-BC061 C500-BI081 C2000-BI083	Q312B Q38B Q612B Q68B	**ERNT-QF12** **ERNT-QF8**
ERNT-CQB051	C500-BC051/052 C500-BC061 C500-BI051	Q38B Q35B Q68B Q65B Q55B	**ERNT-QF8** **ERNT-QF5**
ERNT-CQB031	C500-BC031	Q35B Q33B	**ERNT-QF5**

Mounting Dimensions

- The vertical dimension is smaller than that of the SYSMAC C series. (For module width and depth dimensions, refer to the "Usage Precautions" on 4-16.)
- The base adapter mounting holes (four) share the same dimensions as those of the SYSMAC C series base unit. There is no need to create additional holes on the control panel.
- When replacing the SYSMAC C series with the MELSEC-Q series, the slot positions where the unit is mounted are different. Adjust the wiring length prior to use.

◎ MELSEC-Q series

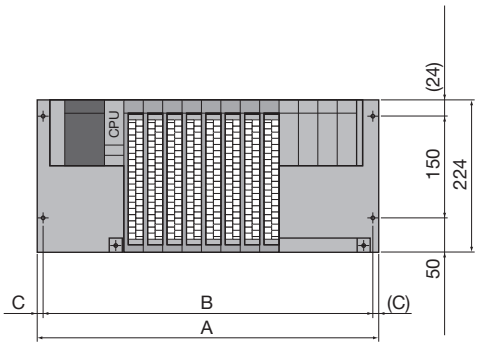

◎ (Reference) SYSMAC C series

Unit: mm

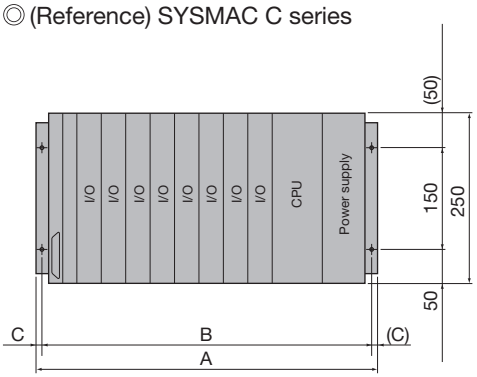

Base adapter model	A	B	C	OMRON base unit model	A	B	C
ERNT-CQB081	480	465	7.5	C500-BC081/082	480	465	7.5
				C2000-BC061	480	465	7.5
				C500-BI081	480	465	7.5
				C2000-BI083	480	465	7.5
				C500-BC091	486	465	10.5
ERNT-CQB051	375	360	7.5	C500-BC051/052	375	360	7.5
				C500-BI051	375	360	7.5
				C500-BC061	381	360	10.5
ERNT-CQB031	276	255	10.5	C500-BC031	276	255	10.5

When Not Using a Base Adapter

When a base adapter is not used, screw holes (M4 × 2) need to be provided to mount the conversion adapter support flange as shown below. The conversion adapter support flange must be mounted.

When using a main base unit

◎With Q312B, Q38B, Q35B, and Q33B

Unit: mm

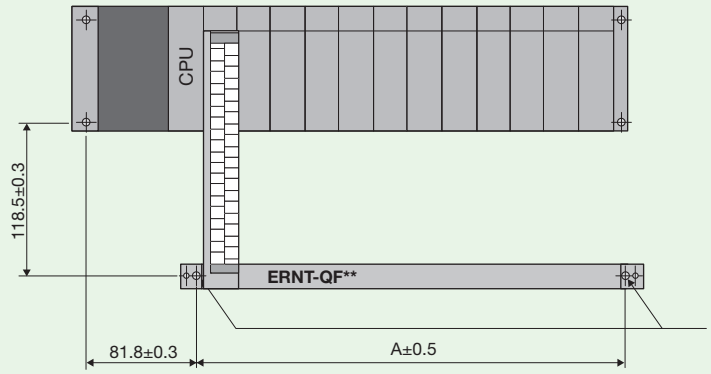

Conversion adapter support flange	A
ERNT-QF12	347.2
ERNT-QF8	236
ERNT-QF5	152.6

Provide screw holes (M4 × 2) to these locations and mount the conversion adapter support flange here.

When using an extension base unit

◎With Q612B, Q68B, Q65B

Unit: mm

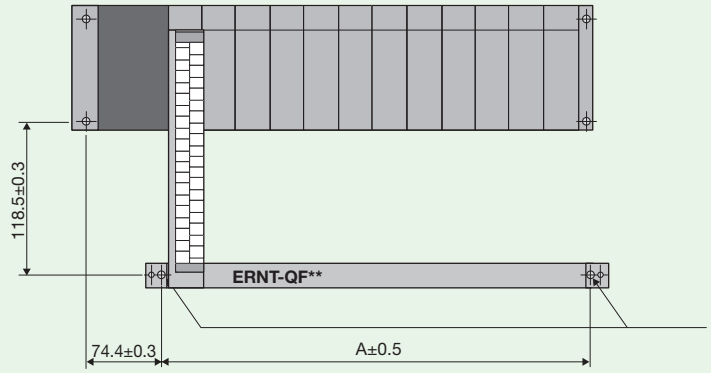

Conversion adapter support flange	A
ERNT-QF12	347.2
ERNT-QF8	236
ERNT-QF5	152.6

Provide screw holes (M4 × 2) to these locations and mount the conversion adapter support flange here.

◎With Q55B

Unit: mm

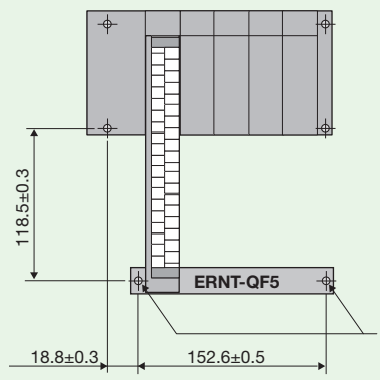

Provide screw holes (M4 × 2) to these locations and mount the conversion adapter support flange here.

Conversion Adapter Support Flange

Specifications

The conversion adapter support flange secures the bottom of the conversion adapter and is thus required during conversion adapter use. One support flange is required per base unit.

Conversion adapter support flange model	Specifications
ERNT-QF12	Conversion adapter support flange for 12-slot MELSEC-Q series modules
ERNT-QF8	Conversion adapter support flange for 8-slot MELSEC-Q series modules
ERNT-QF5	Conversion adapter support flange for 5-slot MELSEC-Q series modules

Usage Precautions

Module Width

The module width is smaller (34.5 mm → 27.4 mm) and the wiring area is smaller, requiring verification during mounting.

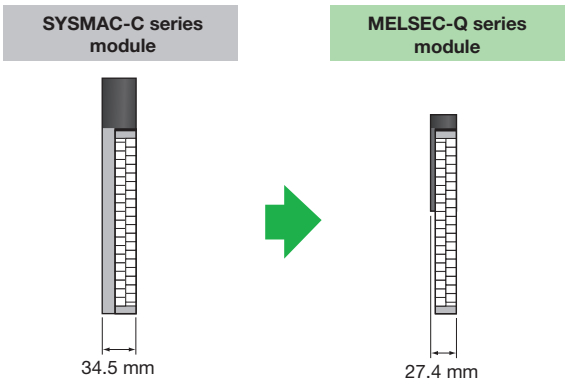

When the wiring interferes with the adjacent module, special consideration is required to secure the wiring area, such as mounting modules in every other slot (such as slots 0, 2, 4, 6, and 8 and leaving slots 1, 3, 5, and 7 empty).

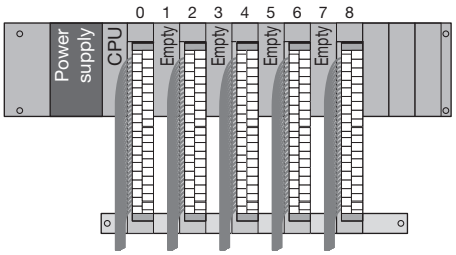

Depth

The depth is larger, requiring verification during mounting.

1-slot type

SYSMAC C : SYSMAC C series MELSEC-Q : MELSEC-Q series

Conversion adapter	ERNT-CQTX121 ERNT-CQTX112213 ERNT-CQTY411 ERNT-CQTY219217 ERNT-CQTY221	ERNT-CQTY226	ERNT-CQTX215218 ERNT-CQTY412 ERNT-CQTY414218	ERNT-CQCX114219 ERNT-CQCY213	ERNT-CQCX218501 ERNT-CQCY415 ERNT-CQCY501
Depth	150.9 mm	173.2 mm	162.3 mm	174.2 mm	174.2 mm
Mounting diagram	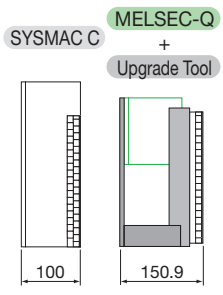	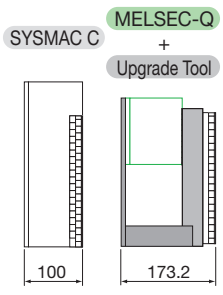	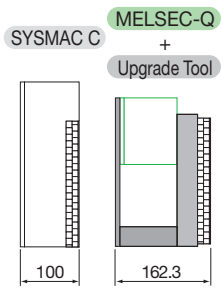	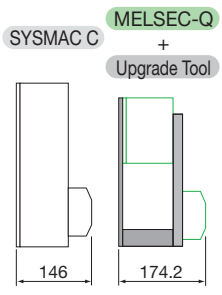	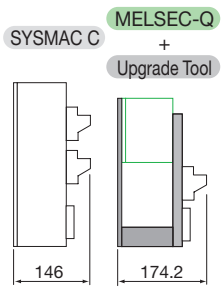
	Increase 50.9 mm	Increase 73.2 mm	Increase 62.3 mm	Increase 28.2 mm	Increase 28.2 mm

*: The above depth is from each panel surface. (SYSMAC C series: Base unit + Input/Output module + Terminal block; MELSEC-Q series + Upgrade Tool: Base adapter + Base unit + Input/Output module + Conversion adapter + Terminal block)

2-slot type SYSMAC C : SYSMAC C series MELSEC-Q : MELSEC-Q series

Conversion adapter	ERNT-CQTX122 ERNT-CQTY224	ERNT-CQTY225	ERNT-CQTY218
Depth	150.9 mm	173.2 mm	150.9 mm
Mounting diagram	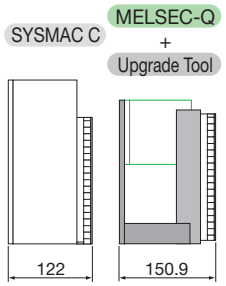 Increase 28.9 mm	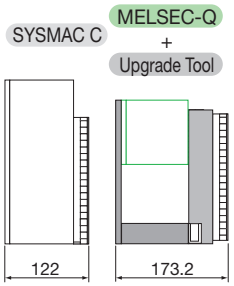 Increase 51.2 mm	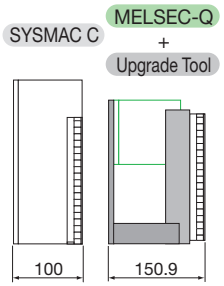 Increase 50.9 mm

*: The above depth is from each panel surface. (SYSMAC C series: Base unit + Input/Output module + Terminal block; MELSEC-Q series + Upgrade Tool: Base adapter + Base unit + Input/Output module + Conversion adapter + Terminal block)

Conversion Adapter Support Flange / Base Adapter

When using a conversion adapter, the conversion adapter support flange is required. We recommend use of a base adapter that permits MELSEC-Q series installation using the mounting holes of the SYSMAC C series (additional drilling of holes is not required).

Slot Positions

When you replace the SYSMAC C series with the MELSEC-Q series, the slot positions are different. Change the slot positions where modules are mounted and adjust the wiring lengths prior to use.

1) C500-BC081/082→Q312B/Q38B

2) C500-BC091→Q312B

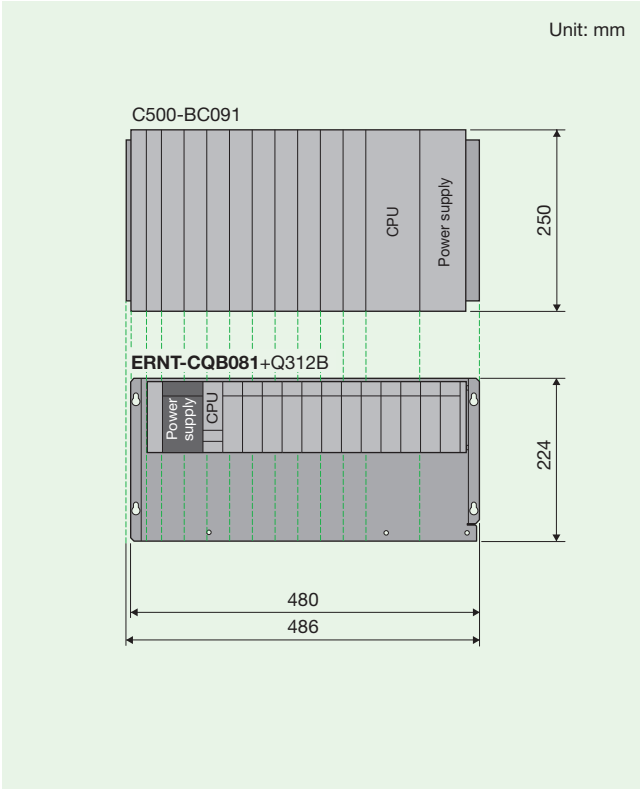

3) C2000-BC061→Q312B/Q38B

4) C500-BC051/052→Q38B/Q35B

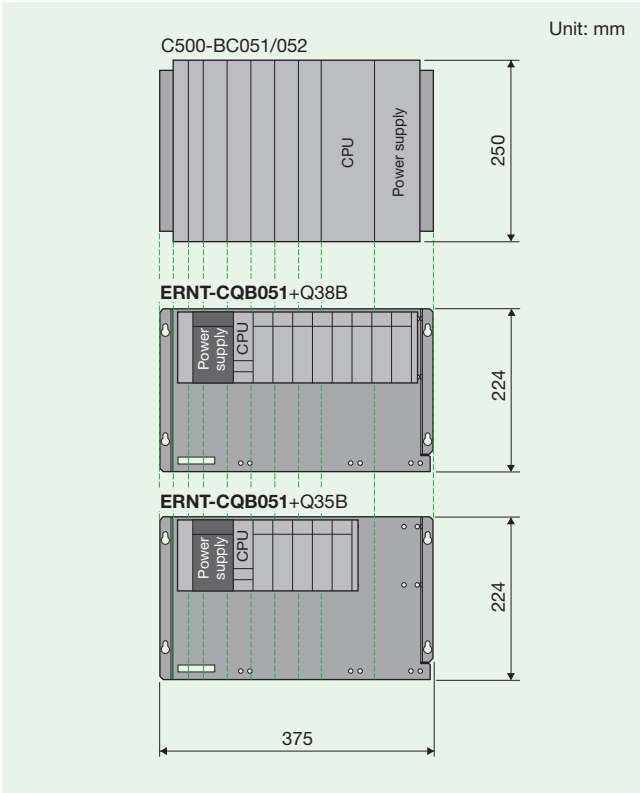

5) C500-BC061→Q38B

Unit: mm

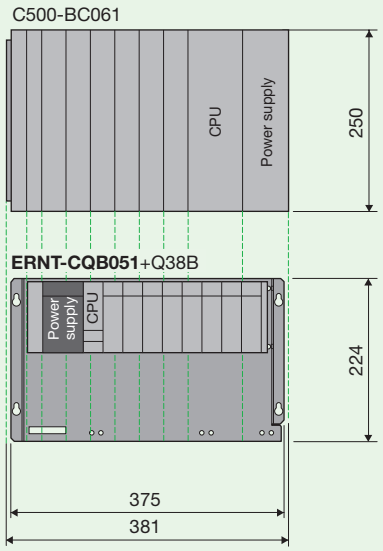

6) C500-BC031→Q35B/Q33B

Unit: mm

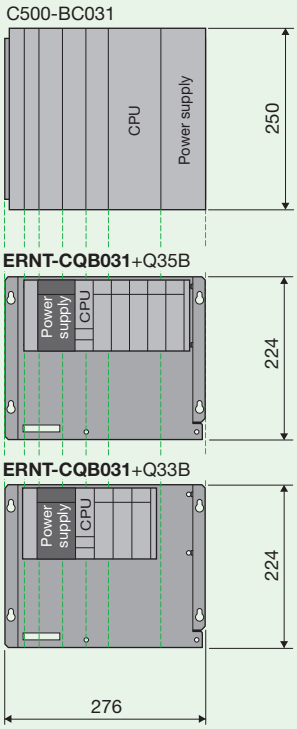

7) C500-BI081/C2000-BI083→Q612B/Q68B

Unit: mm

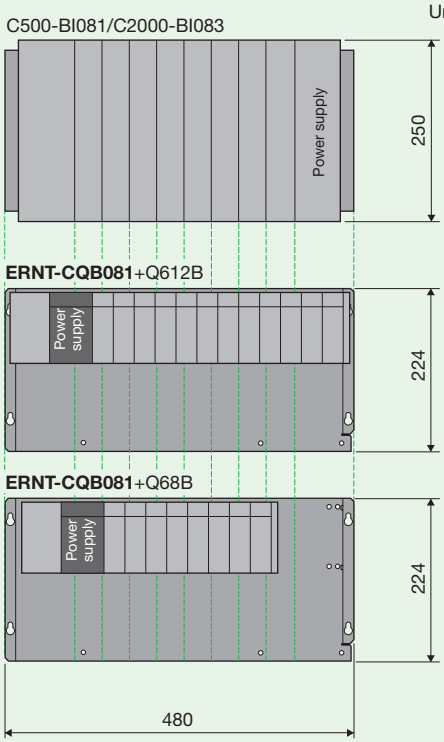

8) C500-BI051→Q68B/Q65B/Q55B

Unit: mm

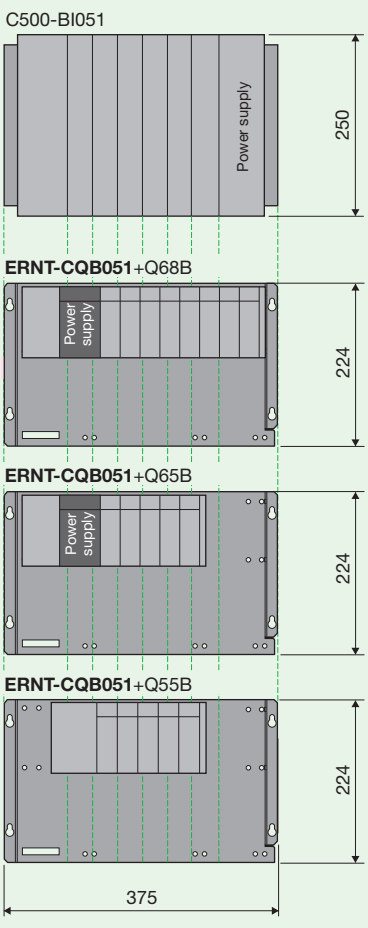

External Dimensions

Conversion Adapter

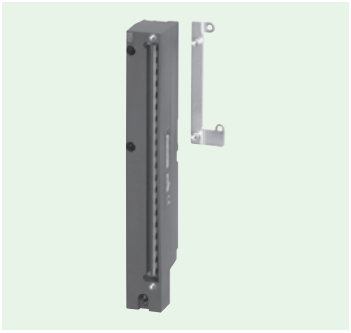

Model names:

ERNT-CQTX121
ERNT-CQTX112213
ERNT-CQTY411
ERNT-CQTY219217
ERNT-CQTY221

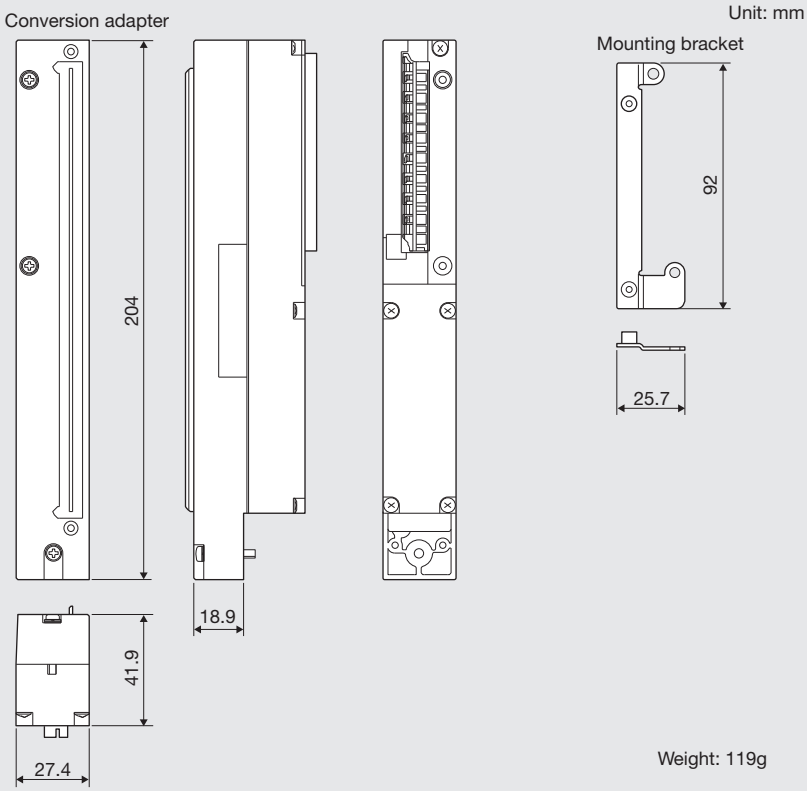

Weight: 119g

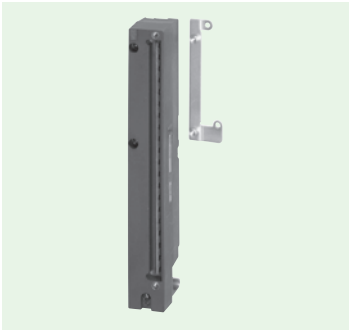

Model name:

ERNT-CQTY226

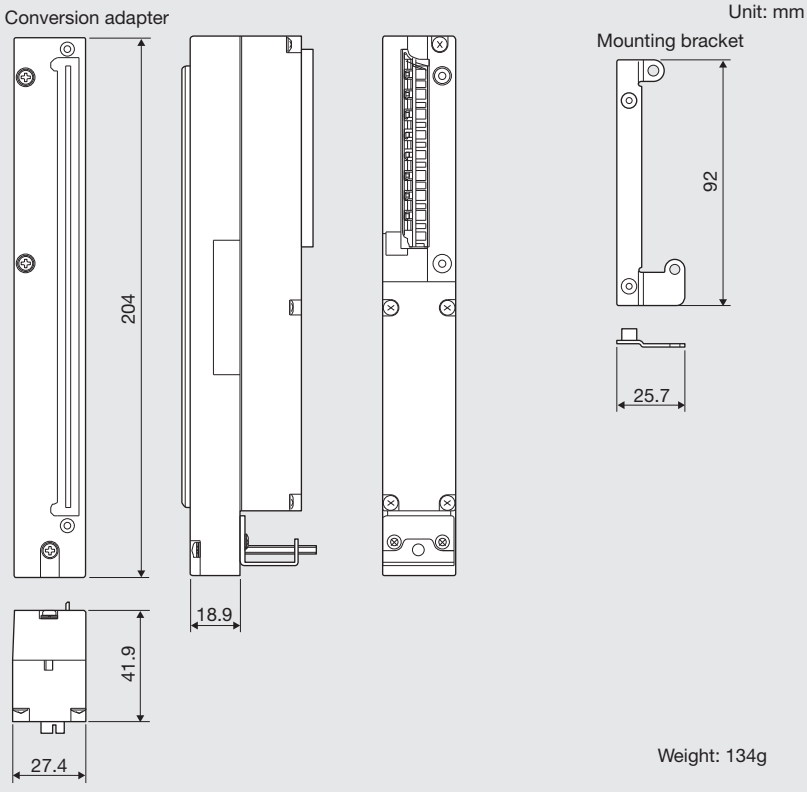

Weight: 134g

Model names:

ERNT-CQTX215218
ERNT-CQTY412
ERNT-CQTY414218

Unit: mm

Conversion adapter

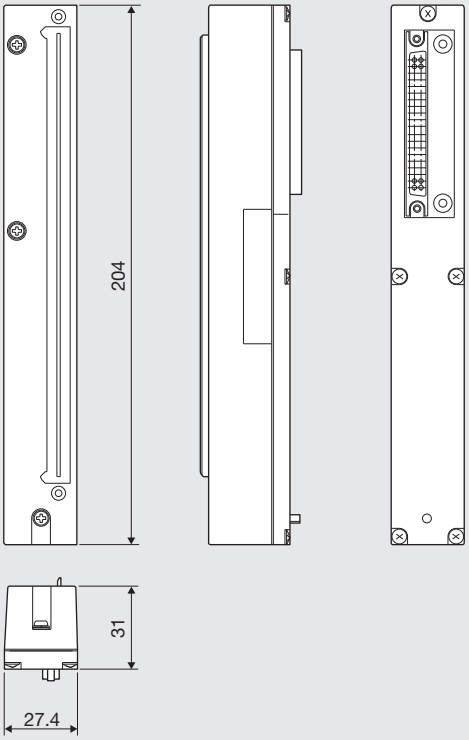

Mounting bracket

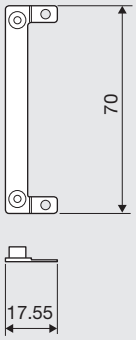

Weight: 109g

Model names:

ERNT-CQCX114219
ERNT-CQCY213

Unit: mm

Conversion adapter

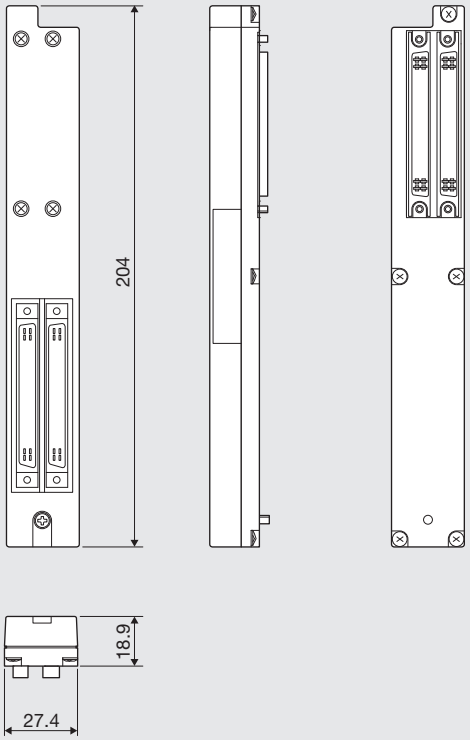

Weight: 102g

Model names:

ERNT-CQCX218501
ERNT-CQCY415
ERNT-CQCY501

Unit: mm

Conversion adapter

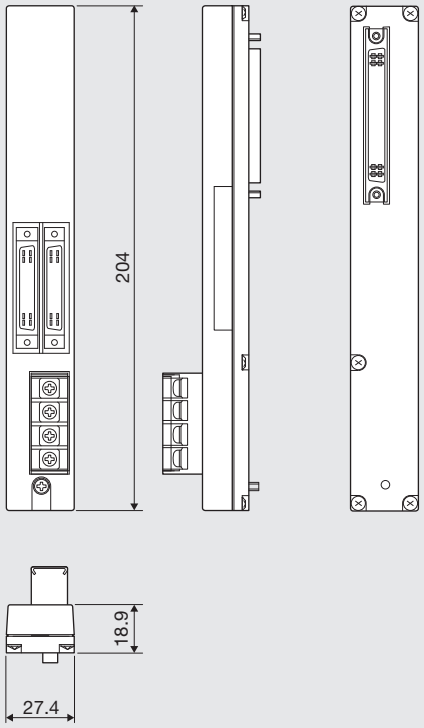

Weight: 101g

Model names:

ERNT-CQTX122
ERNT-CQTY224
ERNT-CQTY218

Unit: mm

Conversion adapter

Mounting bracket

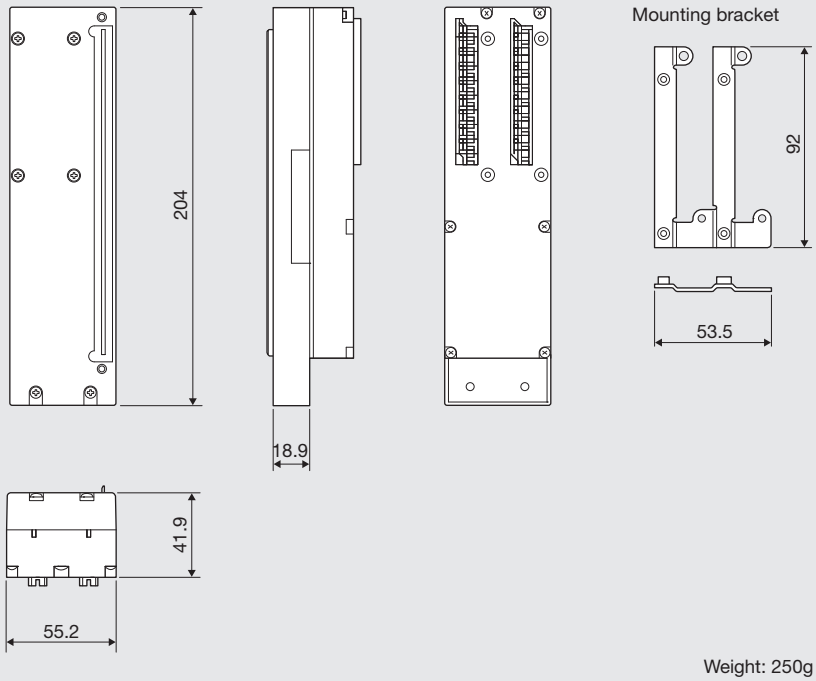

Weight: 250g

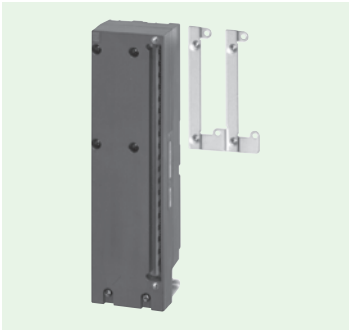

Model name:
ERNT-CQTY225

Unit: mm

Conversion adapter

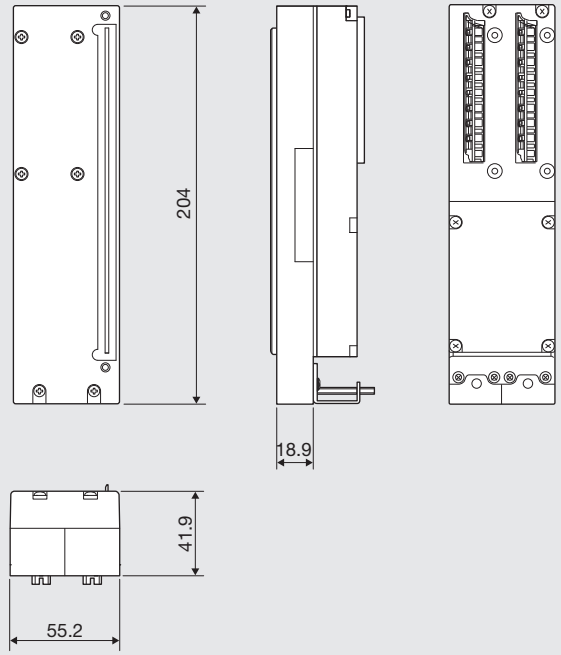

Mounting bracket

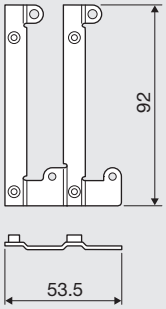

Weight: 280g

Base Adapter

Model names:

ERNT-CQB081
ERNT-CQB051
ERNT-CQB031

Unit: mm

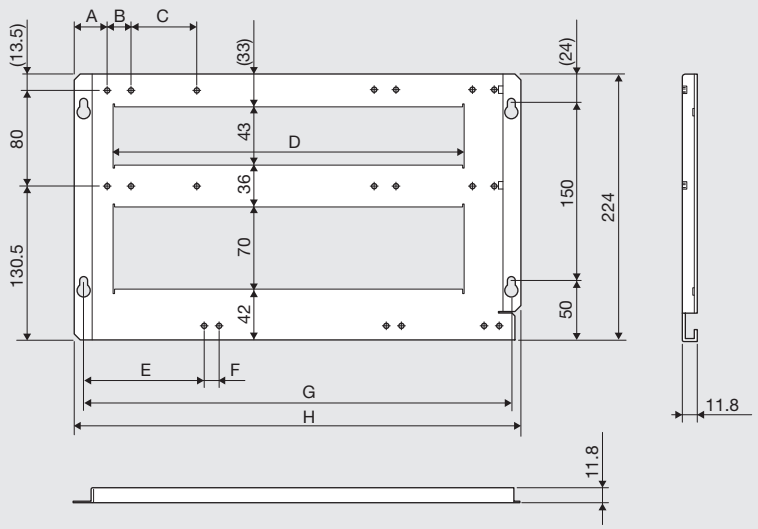

Model	A	B	C	D	E	F	G	H	Weight (g)
ERNT-CQB081	27	14	–	401	108.8	–	465	480	892
ERNT-CQB051	27	20.2	55.6	296	108.8	12.8	360	375	710
ERNT-CQB031	29.3	–	–	197	111.1	–	255	276	542

Conversion Adapter Support Flange

Model name:
ERNT-QF12

Unit: mm

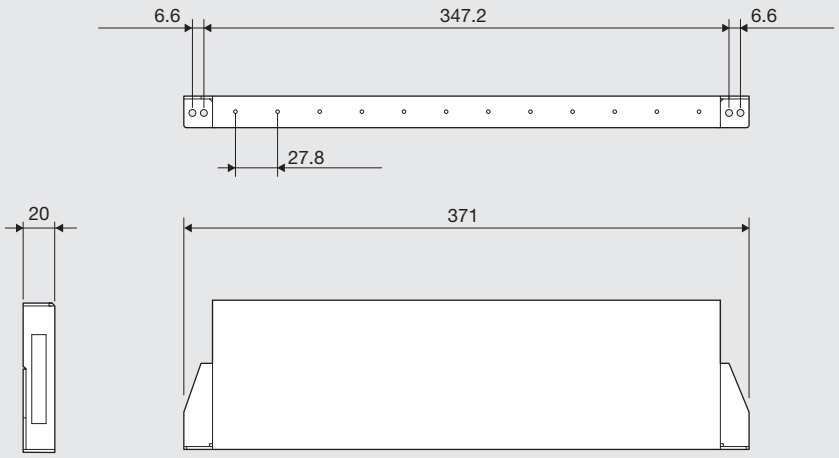

Weight: 620g

Model name:
ERNT-QF8

Unit: mm

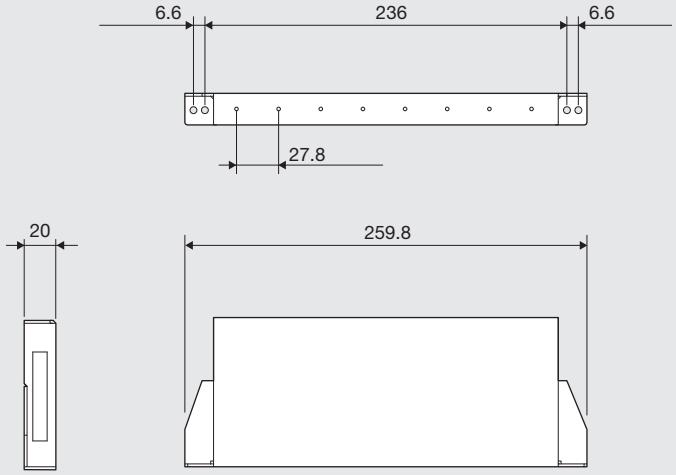

Weight: 435g

Model name:
ERNT-QF5

Unit: mm

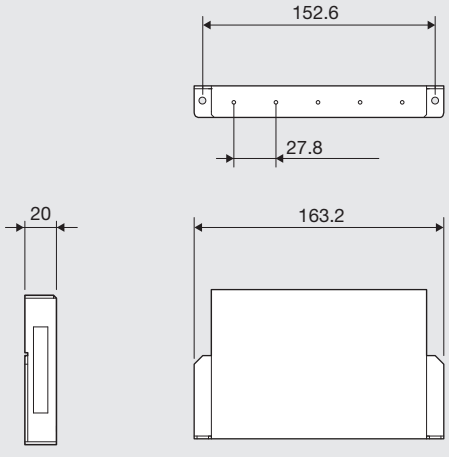

Weight: 290g

Memo

JW Q series New Satellite JW Series ⇨ MELSEC-Q Series Upgrade Tool

JW series large type (JW50H/70H/100H)

Upgrading from the New Satellite JW Series to the MELSEC-Q Series

- **Simplifies replacement with the MELSEC-Q series**
  The upgrade tool makes it easy to replace the SHARP New Satellite JW Series programmable controller with the Mitsubishi Electric MELSEC-Q series.
- **Significantly shortens the time required for input and output module wiring, and significantly reduces wiring errors**
  The upgrade tool allows you to connect the wiring connected to the New Satellite JW Series input/output modules as is to the MELSEC-Q series using a conversion adapter. (Some power supply and common terminal connection changes required.)

Product Overview

This upgrade tool comprises a conversion adapter that is used to transfer the existing wiring of SHARP New Satellite JW Series programmable controller (large type: JW50H/70H/100H) input/output modules to the Mitsubishi programmable controller MELSEC-Q series input/output modules, and a "conversion adapter support flange" that is used to secure the conversion adapter at the bottom.

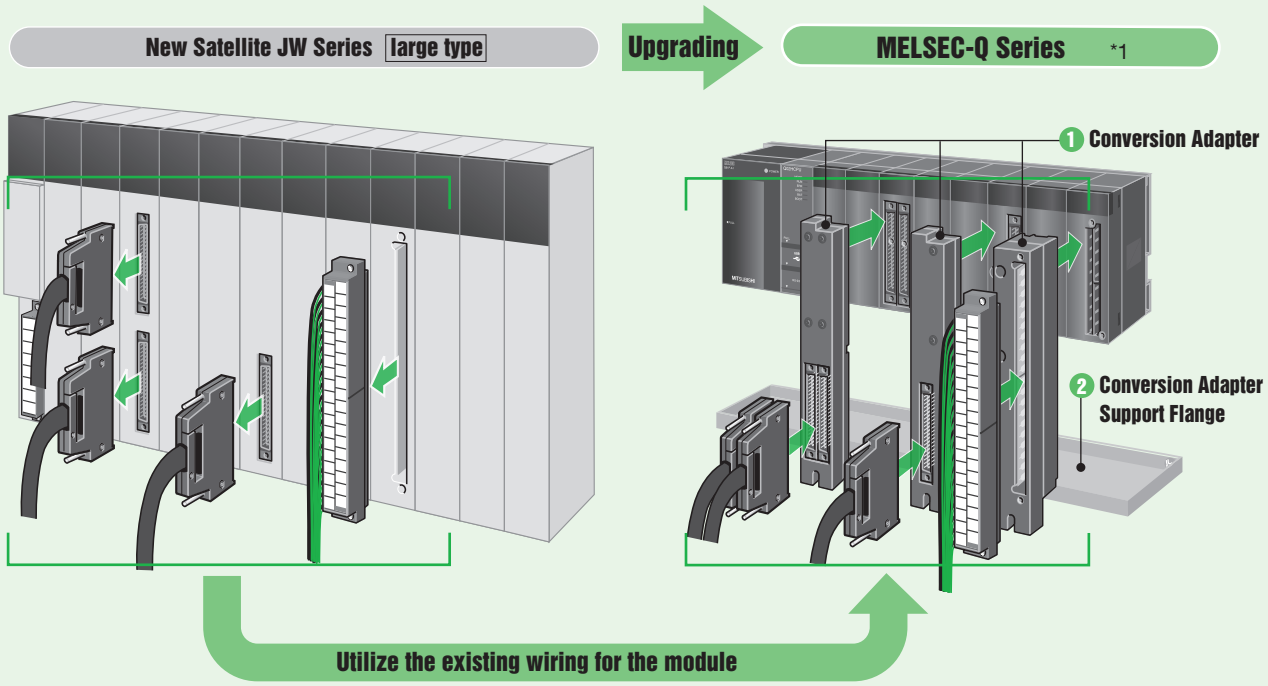

1 Conversion Adapter 5-5

2 Conversion Adapter Support Flange 5-12

Secures the bottom of the conversion adapter. Two mounting holes (M4 screw size) need to be drilled to install it to the control panel. Note that drilling screw holes is not required when a base adapter is used.

*1: When replacing SHARP New Satellite JW Series programmable controller (large type: JW50H/70H/100H) with Mitsubishi programmable controller MELSEC-Q series, verification of the mounting is required due to the change in module width and depth dimensions. There may be a case that the terminal block of the conversion adapter interferes with the adjacent conversion adapter. For details, refer to "Usage Precautions" on page 5-24 in this catalog.

MITSUBISHI ELECTRIC CORPORATION

Upgrading using the Q series large type base unit

Using the Mitsubishi Electric Q series large type base unit (Q☐☐BL) eliminates the need to secure wiring space and check for interference between adjacent conversion adapter terminal blocks.
Note that the pitch of mounting holes in some models are similar to that in the JW series, and therefore mounting positions must be reconsidered.

●If the wiring interferes with an adjacent module, wiring space can be secured by utilizing the Q series large type base unit.

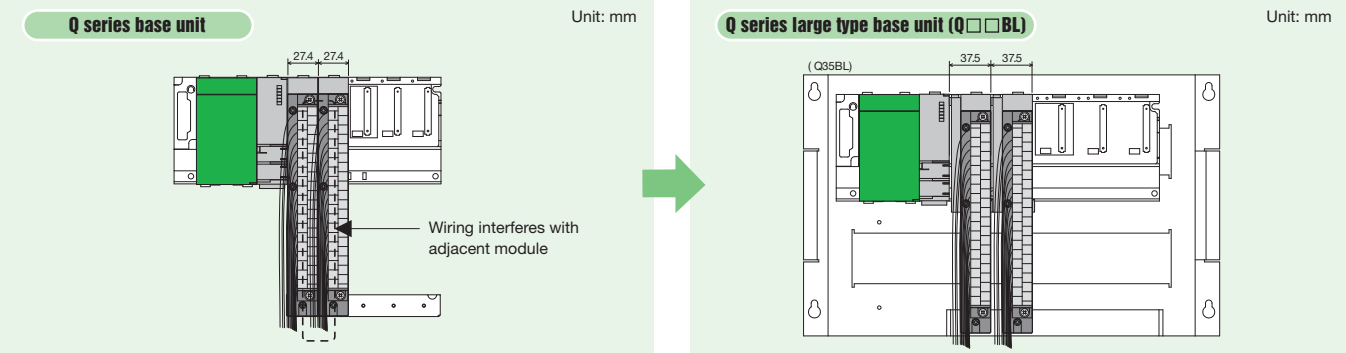

●If the terminal block of a conversion adapter interferes with the adjacent conversion adapter, interference can be avoided by using the Q series large type base unit.

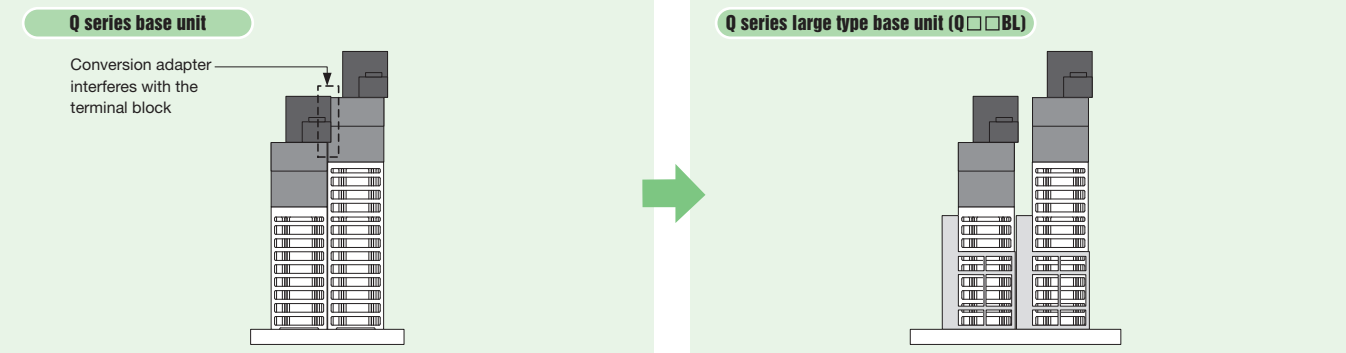

●Q series large type base unit configuration

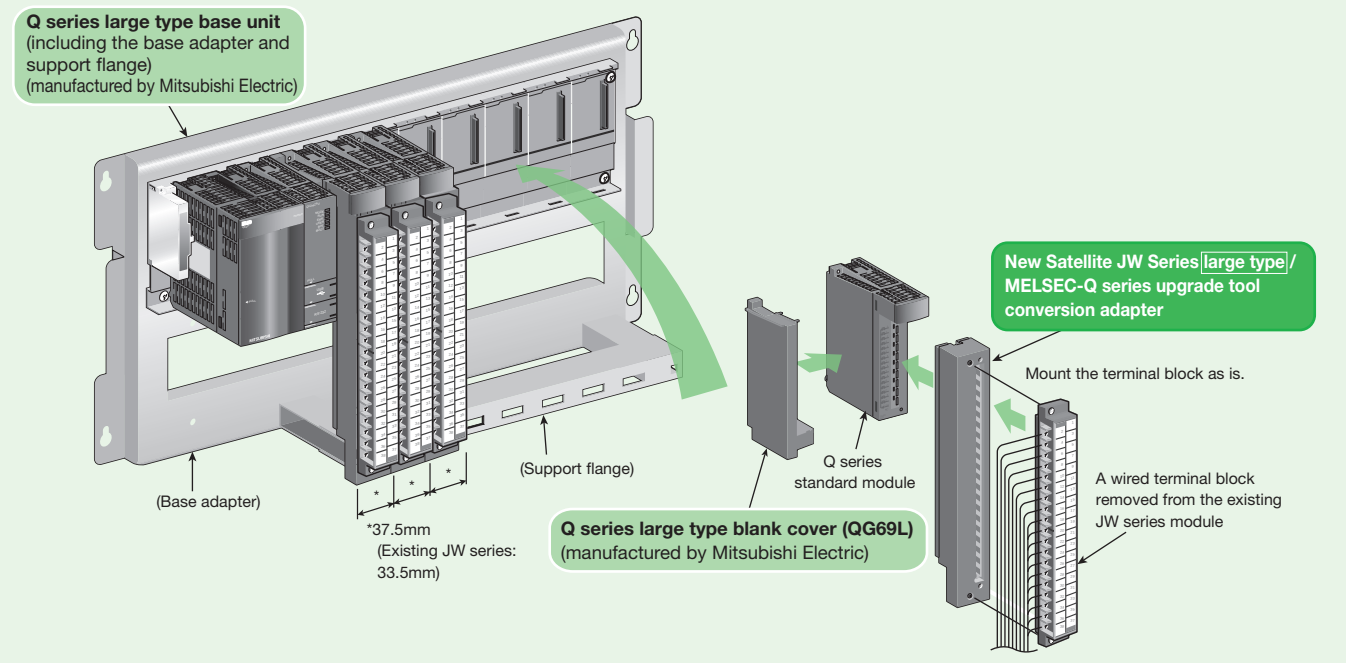

●The 2-slot type conversion adapter is not applicable.
●For details on mounting dimensions, refer to page 5-16 in this catalog.

Q Series Large Type Base Unit List

Model	Description	Number of slots
Q38BL	Main base unit	8
Q35BL		5
Q68BL	Extension base unit with power supply	8
Q65BL		5
Q55BL	Extension base unit without power supply	5

Q Series Large Type Blank Cover

Model	Description
QG69L	Used to adjust gaps between modules

Model List

1 Conversion adapter

When selecting a conversion adapter, be sure to refer to the module specification comparison chart and notes on pages 5-5 to 5-11. These pages describe precautions such as differences in the number of points per common.
For detailed specifications and general specifications not described in the module specification comparison charts, refer to the user's manual for the module used.
Note that the areas where the specifications differ between the New Satellite JW Series large type and the MELSEC-Q series are restricted in terms of specifications during replacement. Verify the specifications of the connected devices.

For Input/Output Modules

[1-slot type] (Applicable to the Mitsubishi Electric Q series large type base unit (Q☐☐BL) as well)

Input/ Output	New Satellite JW Series module model before replacement	MELSEC-Q series module model after replacement	Conversion adapter				Page
			Model	Shape		No. of input/output points	
				New Satellite JW Series	MELSEC-Q series		
Input	JW-11N	QX10	**ERNT-1JQ11N12N**	Terminal block (20 points)	Terminal block (18 points)	16 points	**5-5**
	JW-12N	QX40, QX40-S1, QX70 *3 *7					
	JW-32N	QX41, QX41-S2, QX71 *4 *8	**ERNT-1JQ32N34N**	Terminal block (38 points)	Connector (40P)	32 points	**5-6**
	JW-34N	QX41, QX41-S1, QX41-S2, QX71 *4 *8					
	JW-64NC	QX42, QX42-S1, QX72 *5	**ERNT-1JQ64NC** *1	Connector (40P)×2	Connector (40P)×2	64 points	**5-7**
	JW-34NC						
Output	JW-13S	QY22	**ERNT-1JQ13S**	Terminal block (20 points)	Terminal block (18 points)	16 points	**5-8**
	JW-12S	QY40P, QY50, QY70	**ERNT-1JQ12S**				**5-8**
	JW-32S	QY41H *6	**ERNT-1JQ32S**	Terminal block (38 points)	Connector (40P)	32 points	**5-9**
	JW-32SC	QY41H	**ERNT-1JQ32SC62SC**	Connector (40P)	Connector (40P)	32 points	**5-9**
	JW-62SC	QY41H × 2	**ERNT-1JQ32SC62SC**×2 *2	Connector (40P) ×2	Connector (40P) ×2	32 points ×2	

*1: JW-34NC is replaced with the MELSEC-Q series 64-point input module. (32 points are not used)
*2: Two conversion adapters are required to replace the JW-62SC.
*3: Consider rewiring to the QX80 or QX80H if the existing module uses the 24VDC negative common. Also consider using the ERNT-AQTB20 in such cases.
*4: Consider rewiring to the QX81 or QX81-S2 if the existing module uses the 24VDC negative common. Also consider using the ERNT-AQTB38-E in such cases.
*5: Consider any of the following solutions if the existing module uses the 24VDC negative common.
1) JW-64NC
1. Rewiring to the QX82
2. Rewiring to two QX81s and two ERNT-AQTB38-Es
2) JW-34NC
1. Rewiring to one QX81 and one ERNT-AQTB38-E
*6: Consider rewiring to the QY50 (0.5 A, 16 points) or QY68A (2 A, 8 points) if current capacity is required. Also consider using the ERNT-AQTB20 in such cases.
*7: Consider rewiring to the QX40H or QX80H if the existing module uses a different power supply for each 8-point group. Also consider using the ERNT-AQTB20 in such cases.
*8: Consider rewiring to two QX40Hs or two QX80Hs if the existing module uses a different power supply for each 8-point group. Also consider using the ERNT-AQTB20 in such cases.

[2-slot type] (Not applicable to Mitsubishi Electric Q series large type base unit (Q☐☐BL))

Input/Output	New Satellite JW Series module model before replacement	MELSEC-Q series module model after replacement	Conversion adapter				Page
			Model	Shape		No. of input/output points	
				New Satellite JW Series	MELSEC-Q series		
Input	JW-31N	QX10 x 2	**ERNT-1JQ31N34S**	Terminal block (38 points)	Terminal block (18 points) x 2	32 points	**5-10**
Output	JW-34S	QY10 x 2					
	JW-33S	QY22 x 2	**ERNT-1JQ33S**				**5-11**

☆ Universal conversion adapter (*Requires rewiring. For details, refer to page 7-1 in this catalog.)

Input/output modules and analog/high-speed counter modules in the table below do not support the use of a conversion adapter. These modules, however, can be replaced by using a universal conversion adapter even though rewiring is required.
Check that the specifications of MELSEC-Q series modules satisfy the specifications of devices and equipment to be connected.

For Input/Output Modules

Input/Output	New Satellite JW Series module model			MELSEC-Q series module model				Universal conversion adapter
	Model	Specifications	No. of points	Model	Specifications	No. of points	No. of required modules	
Input	JW-13N	200-240VAC	16 points	QX28	100 to 240VAC	8 points	2 modules	(*9)
Output	JW-35S	12/24VDC source type	32 points	QY81P	12/24VDC source type	32 points	1 modules	(*9)

*9: The universal conversion adapter (refer to page 7-5) can be used for replacement.

For Analog/High-Speed Counter Modules

Input/Output	New Satellite JW Series module model			MELSEC-Q series module model				Universal conversion adapter
	Model	Specifications	Number of channels	Model	Specifications	Number of channels	No. of required modules	
Analog input	JW-8AD	-10 to 10VDC, -20 to 20mADC 14-bit signed binary	8	Q68AD-G	-10 to 0 to +10VDC, 0 to 20mADC 16-bit signed binary	8	1 module	(*10)
Analog output	JW-2DA	-10 to 10VDC, -20 to 20mADC 11-bit signed binary	2	Q62DAN	-10 to +10VDC, 0 to 20mADC 16-bit signed binary	2	1 module	(*10)
High-speed counter input	JW-2HC	50/20/15/8kpps 24-bit binary	2	QD62	200/100/10kpps 32-bit binary	2	1 module	(*10)

*10: The universal conversion adapter (refer to page 7-5) can be used for replacement.

2 Conversion adapter support flange (required)

The same support flange used to replace MELSEC-A series with MELSEC-Q series is used.
A conversion adapter support flange secures the bottom of a conversion adapter. One support flange is required per base unit when a conversion adapter is used.

Note

For panel surface installation, drilling screw holes (M4 screw, 2 locations) is required.
Note that drilling holes is not required when a base adapter is used.

Conversion adapter support flange model	Specifications	Page
ERNT-AQF12	12-slot conversion adapter support flange	5-12
ERNT-AQF8	8-slot conversion adapter support flange	
ERNT-AQF5	5-slot conversion adapter support flange	
ERNT-AQF3	3-slot conversion adapter support flange	

3 Base adapter

The same base adapter used to replace MELSEC-A series with MELSEC-Q series is used.
Both the MELSEC-Q series base unit and the conversion adapter support flange can be installed on the base adapter without drilling screw holes.
For the base unit models marked with *1 to *5, two or more base adapter models are applicable.

Note

Two additional mounting holes (M5 screw) and four M5 screws need to be prepared by the user to install the base adapter to the control panel.
(Additional mounting holes are not required if the mounting dimensions are the same before and after replacement and the existing four mounting holes can be used.)

Base adapter model	Mountable product						Product dimensions	Page
	MELSEC-Q series base unit					Conversion adapter support flange	Width x Height (mm)	
	12 slots	8 slots	5 slots	3 slots	2 slots			
ERNT-AQB38	Q312B					ERNT-AQF12, ERNT-AQF8	480 × 240	5-15
		Q38B (*1)				ERNT-AQF8		
ERNT-AQB35		Q38B (*1)				ERNT-AQF8, ERNT-AQF5	382 × 240	
			Q35B			ERNT-AQF5		
ERNT-AQB32				Q33B		ERNT-AQF3	247 × 240	
ERNT-AQB68	Q612B					ERNT-AQF12, ERNT-AQF8	466 × 240	
		Q68B (*2)				ERNT-AQF8		
ERNT-AQB65		Q68B (*2)				ERNT-AQF8, ERNT-AQF5	352 × 240	
			Q65B (*3) Q55B (*4)			ERNT-AQF5		
ERNT-AQB62				Q63B	Q52B (*5)	ERNT-AQF3	238 × 240	
ERNT-AQB58		Q68B (*2)				ERNT-AQF8	411 × 240	
ERNT-AQB55			Q65B (*3) Q55B (*4)			ERNT-AQF5	297 × 240	
ERNT-AQB52					Q52B (*5)	ERNT-AQF3	183 × 240	

Conversion Adapter

Specifications

For Input/Output Modules

1-slot type (Applicable to MELSEC-Q series large type base units (Q□□BL) as well)

(1) ERNT-1JQ11N12N Terminal block (20P)→Terminal block (18P)

Conversion adapter model	New Satellite JW Series module model	No. of input points	MELSEC-Q series module model
ERNT-1JQ11N12N	JW-11N	16 points	QX10
	JW-12N	16 points	QX40 QX40-S1 QX70

JW-11N→QX10

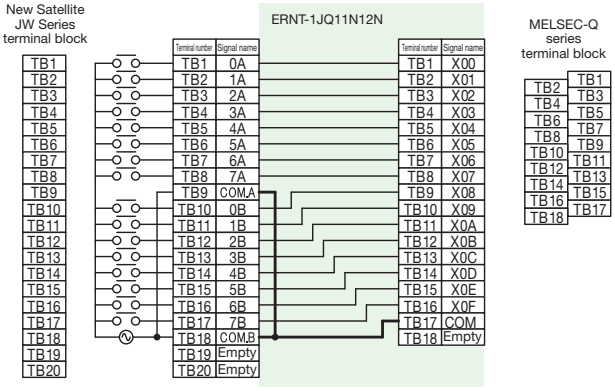

[Specification comparison chart]

Specifications \ Model		New Satellite JW Series	MELSEC-Q series
		JW-11N	QX10
No. of input points		16 points	16 points
Rated input voltage		100-120VAC 50/60Hz	100-120VAC 50/60Hz
Rated input current		Approx. 10mA (100VAC 60Hz) Approx. 8.4mA (100VAC 50Hz)	Approx. 8mA (100VAC 60Hz) Approx. 7mA (100VAC 50Hz)
Input impedance		Approx. 10kΩ (60Hz) Approx. 12kΩ (50Hz)	Approx. 12kΩ (60Hz) Approx. 15kΩ (50Hz)
Inrush current		Max. 480mA 0.2ms (132VAC)	Max. 200mA 1ms (132VAC)
Operating voltage/ current	ON	80VAC / 7mA	80VAC / 5mA
	OFF	30VAC / 3mA	30VAC / 1.7mA
Response time	OFF→ON	25ms or less	15ms or less
	ON→OFF	25ms or less	20ms or less
Isolation method		Photocoupler isolation	Photocoupler isolation
Wiring method for common		8 points per common	16 points per common
External interface		20-point terminal block	18-point terminal block

Notes 1. In a case where the number of points per common changes from 8 (two circuits) to 16 and the terminal numbers TB9 and TB18 on the New Satellite JW Series side are used separately, a wiring change is required.
2. For ▭ areas, check that the specifications of MELSEC-Q series modules satisfy the specifications of devices and equipment to be connected.
3. For detailed specifications and general specifications not described in the specification comparison charts, refer to the user's manual for the module used. Note that the areas where the specifications differ between the New Satellite JW Series and the MELSEC-Q series are restricted in terms of specifications during replacement. Verify the specifications of the connected devices.

JW-12N→QX40/QX40-S1/QX70

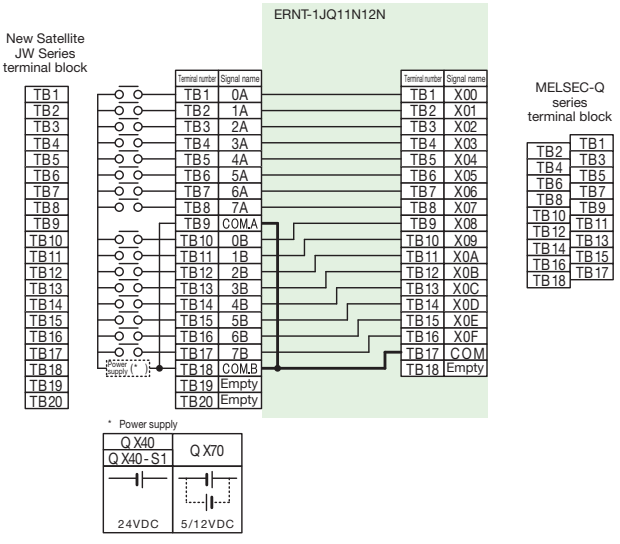

[Specification comparison chart]

Specifications \ Model		New Satellite JW Series	MELSEC-Q series		
		JW-12N Positive common/negative common shared type	QX40 Positive common type	QX40-S1 Positive common type	QX70 Positive common/negative common shared type
No. of input points		16 points	16 points	16 points	16 points
Rated input voltage		12/24VDC 24VAC 50/60Hz	24VDC	24VDC	5/12VDC
Rated input current		Approx. 8.4mA (24VDC/VAC) Approx.4mA (12VDC)	Approx. 4mA	Approx. 6mA	Approx. 3.3mA (12VDC) Approx. 1.2mA (5VDC)
Input impedance		Approx. 2.9kΩ	Approx. 5.6kΩ	Approx. 3.9kΩ	Approx. 3.3kΩ
Inrush current		–	–	–	–
Operating voltage/ current	ON	10V / 3mA	19V / 3mA	19V / 4mA	3.5V / 1mA
	OFF	4.7V / 1.5mA	11V / 1.7mA	11V / 1.7mA	1V / 0.1mA
Response Time	OFF→ON	25ms or less	1/5/10/20 /70ms or less	0.1/0.2/0.4/0.6 /1ms or less	1/5/10/20 /70ms or less
	ON→OFF	25ms or less	1/5/10/20 /70ms or less	0.1/0.2/0.4/0.6 /1ms or less	1/5/10/20 /70ms or less
Isolation method		Photocoupler isolation	Photocoupler isolation	Photocoupler isolation	Photocoupler isolation
Wiring method for common		8 points per common	16 points per common	16 points per common	16 points per common
External interface		20-point terminal block	18-point terminal block	18-point terminal block	18-point terminal block

Notes 1. In a case where the number of points per common changes from 8 (two circuits) to 16 and the terminal numbers TB9 and TB18 on the New Satellite JW Series side are used separately, a wiring change is required.
2. For ▭ areas, check that the specifications of MELSEC-Q series modules satisfy the specifications of devices and equipment to be connected.
3. For detailed specifications and general specifications not described in the specification comparison charts, refer to the user's manual for the module used. Note that the areas where the specifications differ between the New Satellite JW Series and the MELSEC-Q series are restricted in terms of specifications during replacement. Verify the specifications of the connected devices.
4. Consider rewiring to the QX80 or QX80H if the existing module uses the 24VDC negative common. Also consider using the ERNT-AQTB20 in such cases.
5. Consider rewiring to the QX40H or QX80H if the existing module uses a different power supply for each 8-point group. Also consider using the ERNT-AQTB20 in such cases.

(2) ERNT-1JQ32N34N Terminal block (38P)→Connector (40P)

Conversion adapter model	New Satellite JW Series module model	No. of input points	MELSEC-Q series module model
ERNT-1JQ32N34N	JW-32N	32 points	QX41 QX41-S2 QX71
	JW-34N	32 points	QX41 QX41-S1 QX41-S2 QX71

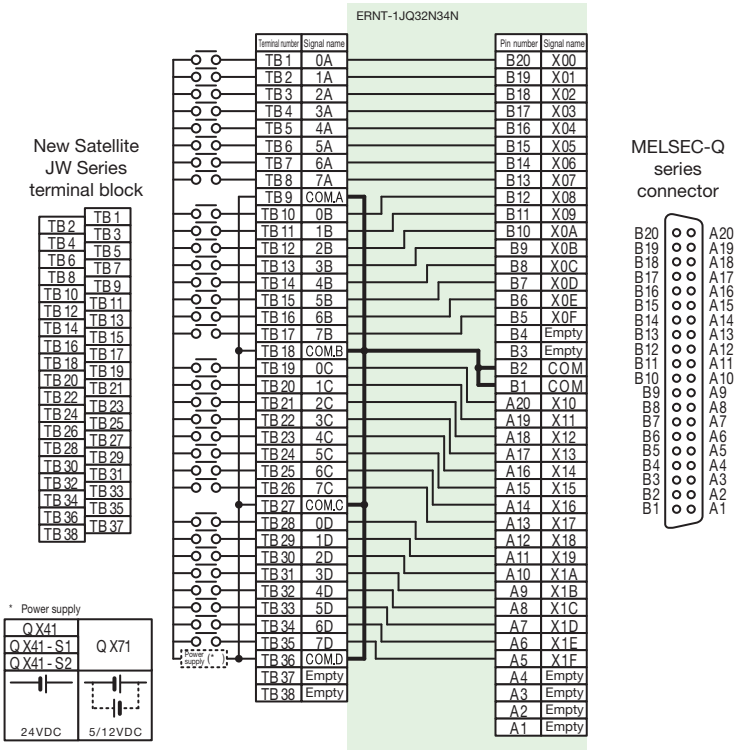

[Specification comparison chart]

Specifications \ Model		New Satellite JW Series		MELSEC-Q series			
		JW-32N Positive common/negative common shared type	JW-34N Positive common/negative common shared type	QX41 Positive common type	QX41-S1 Positive common type	QX41-S2 Positive common type	QX71 Positive common/negative common shared type
No. of input points		32 points	32 points	32 points	32 points	32 points	32 points
Rated input voltage		12/24VDC 24VAC 50/60Hz	12/24VDC	24VDC	24VDC	24VDC	5/12VDC
Rated input current		Approx. 8.4mA (24VDC/AC) Approx. 4mA (12VDC)	Approx. 8.4mA (24VDC) Approx. 4mA (12VDC)	Approx. 4mA	Approx. 4mA	Approx. 6mA	Approx. 3.3mA (12VDC) Approx. 1.2mA (5VDC)
Input impedance		Approx. 2.9kΩ	Approx. 2.9kΩ	Approx. 5.6kΩ	Approx. 5.6kΩ	Approx. 3.6kΩ	Approx. 3.3kΩ
Inrush current		–	–	–	–	–	–
Operating voltage/current	ON	10V / 3mA	10V / 3mA	19V / 3mA	19V / 3mA	15V / 3mA	3.5V / 1mA
	OFF	4.7V / 1.5mA	4.7V / 1.5mA	11V / 1.7mA	9.5V / 1.5mA	5V / 1.7mA	1V / 0.1mA
Response time	OFF→ON	25ms or less	0.5ms or less	1/5/10/20/70ms or less	0.1/0.2/0.4/0.6/1ms or less	1/5/10/20/70ms or less	1/5/10/20/70ms or less
	ON→OFF	25ms or less	1.5ms or less	1/5/10/20/70ms or less	0.1/0.2/0.4/0.6/1ms or less	1/5/10/20/70ms or less	1/5/10/20/70ms or less
Isolation method		Photocoupler isolation	Photocoupler isolation	Photocoupler isolation	Photocoupler isolation	Photocoupler isolation	Photocoupler isolation
Wiring method for common		8 points per common	8 points per common	32 points per common	32 points per common	32 points per common	32 points per common
External interface		38-point terminal block	38-point terminal block	40-pin connector	40-pin connector	40-pin connector	40-pin connector

Notes 1. In a case where the number of points per common changes from 8 (four circuits) to 32 and the terminal numbers TB9, TB18, TB27, and TB36 on the New Satellite JW Series side are used separately, a wiring change is required.
2. For ▭ areas, check that the specifications of MELSEC-Q series modules satisfy the specifications of devices and equipment to be connected.
3. For detailed specifications and general specifications not described in the specification comparison charts, refer to the user's manual for the module used. Note that the areas where the specifications differ between the New Satellite JW Series and the MELSEC-Q series are restricted in terms of specifications during replacement. Verify the specifications of the connected devices.
4. Consider rewiring to the QX81 or QX81-S2 if the existing module uses the 24VDC negative common. Also consider using the ERNT-AQTB38-E in such cases.
5. Consider rewiring to two QX40Hs or two QX80Hs if the existing module uses different power supplies for each 8-point group. Also consider using the ERNT-AQTB20 in such cases.

(3) ERNT-1JQ64NC connector (40P) × 2→Connector (40P) × 2

Conversion adapter model	New SatelliteJW Series module model	No. of input points	MELSEC-Q series module model
ERNT-1JQ64NC	JW-64NC	64 points	QX42 QX42-S1 QX72
	JW-34NC	32 points *1	

*1: JW-34NC is replaced with the MELSEC-Q series 64-point input module. (32 points are not used)

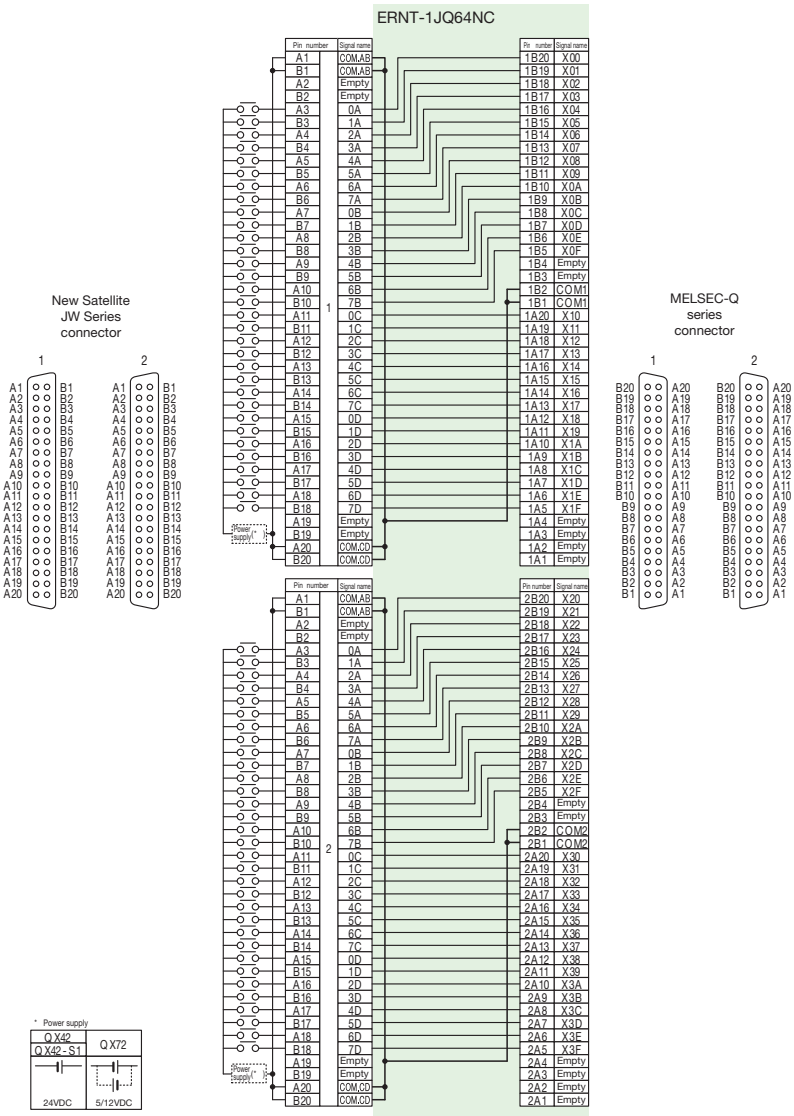

[Specification comparison chart]

Specifications \ Model		New Satellite JW Series		MELSEC-Q series		
		JW-64NC Positive common/negative common shared type	JW-34NC Positive common/negative common shared type	QX42 Positive common type	QX42-S1 Positive common type	QX72 Positive common/negative common shared type
No. of input points		64 points	32 points	64 points	64 points	64 points
Rated input voltage		12/24VDC	12/24VDC	24VDC	24VDC	5/12VDC
Rated input current		Approx. 7.5mA (24VDC) Approx. 3.5mA (12VDC)	Approx. 7.5mA (24VDC) Approx. 3.5mA (12VDC)	Approx. 4mA	Approx. 4mA	Approx. 3.3mA (12VDC) Approx. 1.2mA (5VDC)
Input impedance		Approx. 3.3kΩ	Approx. 3.3kΩ	Approx. 5.6kΩ	Approx. 5.6kΩ	Approx. 3.3kΩ
Inrush current		–	–	–	–	–
Operating voltage/ current	ON	10.5V / 3.2mA	10.5V / 3.2mA	19V / 3mA	19V / 3mA	3.5V / 1mA
	OFF	5V / 1.5mA	5V / 1.5mA	11V / 1.7mA	9.5V / 1.5mA	1V / 0.1mA
Response time	OFF→ON	0.5ms or less	0.5ms or less	1/5/10/20/70ms or less	0.1/0.2/0.4/0.6/1ms or less	1/5/10/20/70ms or less
	ON→OFF	1.5ms or less	1.5ms or less	1/5/10/20/70ms or less	0.1/0.2/0.4/0.6/1ms or less	1/5/10/20/70ms or less
Isolation method		Photocoupler isolation	Photocoupler isolation	Photocoupler isolation	Photocoupler isolation	Photocoupler isolation
Wiring method for common		16 points per common	16 points per common	32 points per common	32 points per common	32 points per common
External interface		40-pin connector x 2	40-pin connector	40-pin connector x 2	40-pin connector x 2	40-pin connector x 2

Notes 1. In a case where the number of points per common changes from 16 (four circuits) to 32 (two circuits) and the pin numbers A1/B1 and A20/B20 of 1 and pin numbers A1/B1 and A20/B20 of 2 on the New Satellite JW Series side are used separately, a wiring change is required.

2. JW-34NC is replaced with the MELSEC-Q series 64-point input module. (32 points are not used)

3. For ▭ areas, check that the specifications of MELSEC-Q series modules satisfy the specifications of devices and equipment to be connected.

4. For detailed specifications and general specifications not described in the specification comparison charts, refer to the user's manual for the module used. Note that the areas where the specifications differ between the New Satellite JW Series and the MELSEC-Q series are restricted in terms of specifications during replacement. Verify the specifications of the connected devices.

5. Consider any of the following solutions if the existing module uses the 24VDC negative common.

1) JW-64NC
1. Rewiring to the QX8 2. Rewiring to two QX81s and two ERNT-AQTB38-Es

2)JW-34NC
1. Rewiring to one QX81 and one ERNT-AQTB38-E

(4) ERNT-1JQ13S Terminal block (20P)→Terminal block (18P)

Conversion adapter model	New Satellite JW Series module model	No. of output points	MELSEC-Q series module model
ERNT-1JQ13S	JW-13S	16 points	QY22

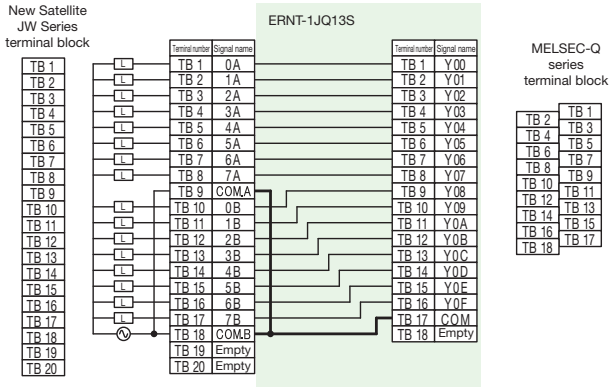

[Specification comparison chart]

Specifications \ Model	New Satellite JW Series	MELSEC-Q series
	JW-13S (Triac output)	QY22 (Triac output)
No. of output points	16 points	16 points
Rated load voltage	110-240VAC 50/60Hz	100-240VAC 50/60Hz
Maximum load current	2A/point 4A/common	0.6A/point 4.8A/common
Minimum load current	10mA	25mA
Maximum inrush current	6A 100ms or less	20A, one cycle or less
Leakage current at OFF	1.5mA or less (120VAC 60Hz) 3mA or less (240VAC 60Hz)	1.5mA or less (120VAC 60Hz) 3mA or less (240VAC 60Hz)
Voltage drop at ON	2V or less (2A)	1.5V or less
Response time OFF→ON	1ms or less	1ms + 0.5 cycle or less
Response time ON→OFF	1ms + 0.5 cycle or less	1ms + 0.5 cycle or less
Surge suppressor	CR absorber/varistor	CR absorber
Fuse	4A (not replaceable)	None
Isolation method	Photocoupler isolation	Photocoupler isolation
Wiring method for common	8 points per common	16 points per common
External interface	20-point terminal block	18-point terminal block

Notes 1. In a case where the number of points per common changes from 8 (two circuits) to 16 and the terminal numbers TB9 and TB18 on the New Satellite JW Series side are used separately, a wiring change is required.
2. For ▭ areas, check that the specifications of MELSEC-Q series modules satisfy the specifications of devices and equipment to be connected.
3. For detailed specifications and general specifications not described in the specification comparison charts, refer to the user's manual for the module used. Note that the areas where the specifications differ between the New Satellite JW Series and the MELSEC-Q series are restricted in terms of specifications during replacement. Verify the specifications of the connected devices.

(5) ERNT-1JQ12S Terminal block (20P)→Terminal block (18P)

Conversion adapter model	New Satellite JW Series module model	No. of output points	MELSEC-Q series module model
ERNT-1JQ12S	JW-12S	16 points	QY40P QY50 QY70

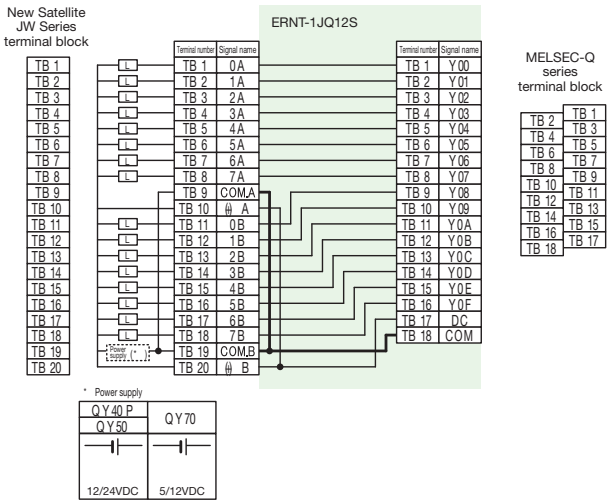

[Specification comparison chart]

Specifications \ Model	New Satellite JW Series	MELSEC-Q series		
	JW-12S Sink type	QY40P Sink type	QY50 Sink type	QY70 Sink type
No. of output points	16 points	16 points	16 points	16 points
Rated load voltage	5/12/24VDC	12/24VDC	12/24VDC	5/12VDC
Maximum load current	1A/point 8A/common	0.1A/point 1.6A/common	0.5A/point 4A/common	16mA/point 256mA/common
Maximum inrush current	4A, 100ms	0.7A, 10ms	4A, 10ms	40mA, 10ms
Leakage current at OFF	0.2mA or less	0.1mA or less	0.1mA or less	–
Voltage drop at ON	1VDC (MAX.) 1A	0.2VDC (MAX.) 0.1A	0.3VDC (MAX.) 0.5A	VOL: 0.3VDC
Response time OFF→ON	1ms or less	1ms or less	1ms or less	0.5ms or less
Response time ON→OFF	1ms or less (resistive load)	1ms or less (resistive load)	1ms or less (resistive load)	0.5ms or less (resistive load)
Surge suppressor	Zener diode	Zener diode	Zener diode	None
Fuse	8A (not replaceable)	None	6.7A (not replaceable)	1.6A (not replaceable)
Isolation method	Photocoupler isolation	Photocoupler isolation	Photocoupler isolation	Photocoupler isolation
Wiring method for common	8 points per common	16 points per common	16 points per common	16 points per common
External interface	20-point terminal block	18-point terminal block	18-point terminal block	18-point terminal block

Notes 1. In a case where the number of points per common changes from 8 (two circuits) to 16 and the terminal numbers TB9 and TB18 on the New Satellite JW Series side are used separately, a wiring change is required.
2. For ▭ areas, check that the specifications of MELSEC-Q series modules satisfy the specifications of devices and equipment to be connected.
3. For detailed specifications and general specifications not described in the specification comparison charts, refer to the user's manual for the module used. Note that the areas where the specifications differ between the New Satellite JW Series and the MELSEC-Q series are restricted in terms of specifications during replacement. Verify the specifications of the connected devices.

(6) ERNT-1JQ32S Terminal block (38P) → Connector (40P)

Conversion adapter model	New Satellite JW Series module model	No. of output points	MELSEC-Q series module model
ERNT-1JQ32S	JW-32S	32 points	QY41H

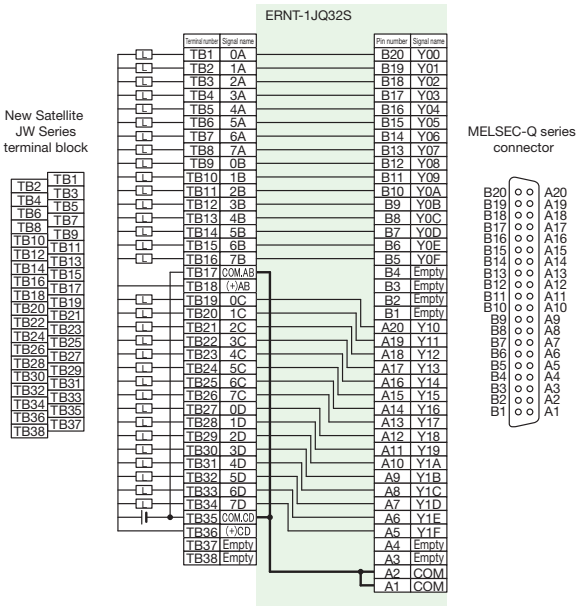

[Specification comparison chart]

Specifications \ Model	New Satellite JW Series	MELSEC-Q series
	JW-32S Sink type	QY41H Sink type
No. of output points	32 points	32 points
Rated load voltage	5/12/24VDC	5/12/24VDC
Maximum load current	1A/point 8A/common	0.2A/point 2A/common
Minimum load current	—	—
Maximum inrush current	4A, 100ms or less	0.7A 10ms or less
Leakage current at OFF	0.2mA or less	0.1mA or less
Voltage drop at ON	1VDC (MAX.) 1A	0.2VDC (MAX.) 0.1A
Response time OFF→ON	1ms or less	2μs or less
Response time ON→OFF	1ms or less (resistive load)	2μs or less (resistive load)
Surge suppressor	Zener diode	Zener diode
Fuse	8A (not replaceable)	None
Isolation method	Photocoupler isolation	Photocoupler isolation
Wiring method for common	16 points per common	32 points per common
External interface	38-point terminal block	40-pin connector

Notes
1. In a case where the number of points per common changes from 16 (two circuits) to 32 and the terminal numbers TB17 and TB35 on the New Satellite JW Series side are used separately, a wiring change is required.
2. For ▭ areas, check that the specifications of MELSEC-Q series modules satisfy the specifications of devices and equipment to be connected.
3. For detailed specifications and general specifications not described in the specification comparison charts, refer to the user's manual for the module used. Note that the areas where the specifications differ between the New Satellite JW Series and the MELSEC-Q series are restricted in terms of specifications during replacement. Verify the specifications of the connected devices.
4. Consider rewiring to the QY50 (0.5A, 16 points) or QY68A (2A, 8 points) if current capacity is required. Also consider using the ERNT-AQTB20 in such cases.

(7) ERNT-1JQ32SC62SC Connector (40P) → Connector (40P)

Conversion adapter model	New Satellite JW Series module model	No. of output points	MELSEC-Q series module model
ERNT-1JQ32SC62SC	JW-32SC	32 points	QY41H
ERNT-1JQ32SC62SC × 2	JW-62SC*1	64 points	QY41H × 2 modules

*1: Two sets of the QY41H and the conversion adapter are required (32 points for each set) to replace the JW-62SC.

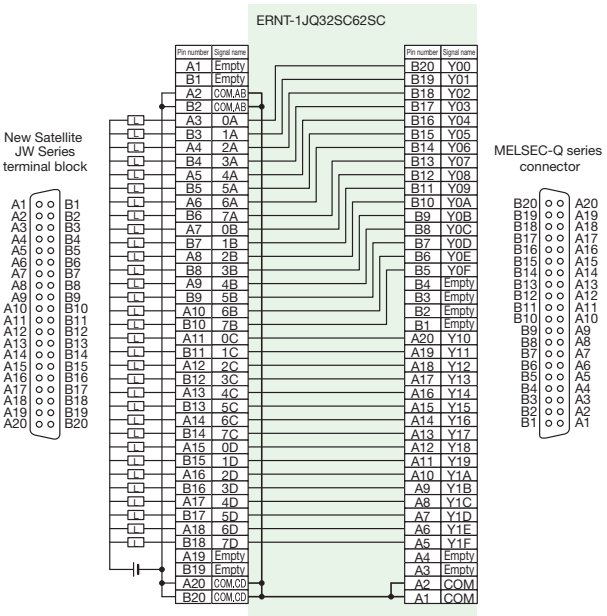

[Specification comparison chart]

Specifications \ Model	New Satellite JW Series		MELSEC-Q series
	JW-32SC Sink type	JW-62SC Sink type	QY41H Sink type
No. of output points	32 points	64 points	32 points
Rated load voltage	5/12/24VDC	5/12/24VDC	5/12/24VDC
Maximum load current	0.3A/point 4.8A/common	0.1A/point 1.6A/common	0.2A/point 2A/common
Maximum inrush current	1A 100ms or less	0.12A 100ms or less	0.7A 10ms or less
Leakage current at OFF	0.2mA or less	0.2mA or less	0.1mA or less
Voltage drop at ON	1VDC (MAX.) 1 A	1.3VDC (MAX.) 0.1 A	0.2VDC (MAX.) 0.1A
Response time OFF→ON	1ms or less	1ms or less	2μs or less
Response time ON→OFF	1ms or less (resistive load)	1ms or less (resistive load)	2μs or less (resistive load)
Surge suppressor	Zener diode	Zener diode	Zener diode
Fuse	None	None	None
Isolation method	Photocoupler isolation	Photocoupler isolation	Photocoupler isolation
Wiring method for common	16 points per common	16 points per common	32 points per common
External interface	40-pin connector	40-pin connector x 2	40-pin connector

Notes
1. In a case where the number of points per common changes from 16 (two circuits) to 32 and the pin numbers A2/B2 and A20/B20 of 1 for the New Satellite JW Series are used separately, a wiring change is required.
2. Two sets of the QY41H and the conversion adapter are required (32 points for each set) to replace the JW-62SC.
3. For ▭ areas, check that the specifications of MELSEC-Q series modules satisfy the specifications of devices and equipment to be connected.
4. For detailed specifications and general specifications not described in the specification comparison charts, refer to the user's manual for the module used. Note that the areas where the specifications differ between the New Satellite JW Series and the MELSEC-Q series are restricted in terms of specifications during replacement. Verify the specifications of the connected devices.

[2-slot type] (Not applicable to MELSEC-Q series large type base units (Q□□BL).)

(1) ERNT-1JQ31N34S Terminal block (38P) → Terminal block (18P) x 2

Conversion adapter model	New Satellite JW Series module model	No. of input/ output points	MELSEC-Q series module model	No. of required modules
ERNT-1JQ31N34S	JW-31N	32 points	QX10	2 modules
	JW-34S	32 points	QY10	2 modules

JW-31N → QX10

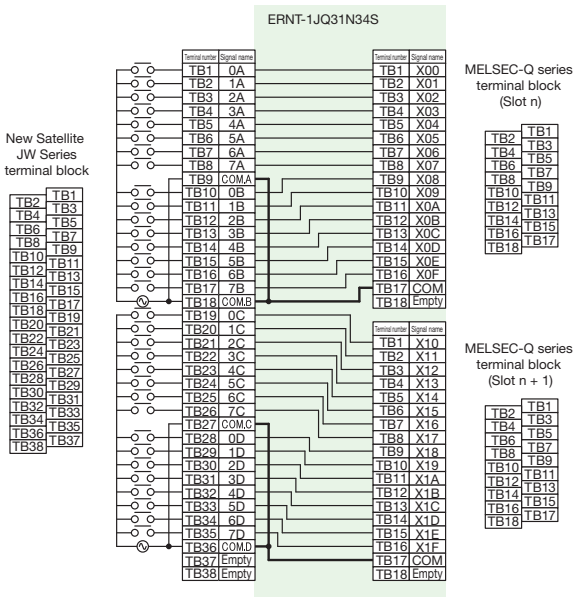

[Specification comparison chart]

Specifications \ Model		New Satellite JW Series JW-31N	MELSEC-Q series QX10
No. of input points		32 points	16 points
Rated input voltage		100-120VAC 50/60Hz	100-120VAC 50/60Hz
Rated input current		Approx. 10mA (100VAC 60Hz) Approx. 8.4mA (100VAC 50Hz)	Approx. 8mA (100VAC 60Hz) Approx. 7mA (100VAC 50Hz)
Input impedance		Approx. 10kΩ (60Hz) Approx. 12kΩ (50Hz)	Approx. 12kΩ (60Hz) Approx. 15kΩ (50Hz)
Inrush current		Max. 480mA 0.2ms (132VAC)	Max. 200mA 1ms (132VAC)
Operating voltage/ current	ON	80VAC / 7mA	80VAC / 5mA
	OFF	30VAC / 3mA	30VAC / 1.7mA
Response time	OFF→ON	25ms or less	15ms or less
	ON→OFF	25ms or less	20ms or less
Isolation method		Photocoupler isolation	Photocoupler isolation
Wiring method for common		8 points per common	16 points per common
External interface		38-point terminal block	18-point terminal block

Notes
1. In a case where the number of points per common changes from 8 (four circuits) to 16 (two circuits) and the terminal numbers TB9/TB18 and TB27/TB36 on the New Satellite JW Series side are used separately, a wiring change is required.
2. For ▭ areas, check that the specifications of MELSEC-Q series modules satisfy the specifications of devices and equipment to be connected.
3. For detailed specifications and general specifications not described in the specification comparison charts, refer to the user's manual for the module used. Note that the areas where the specifications differ between the New Satellite JW Series and the MELSEC-Q series are restricted in terms of specifications during replacement. Verify the specifications of the connected devices.

JW-34S → QY10

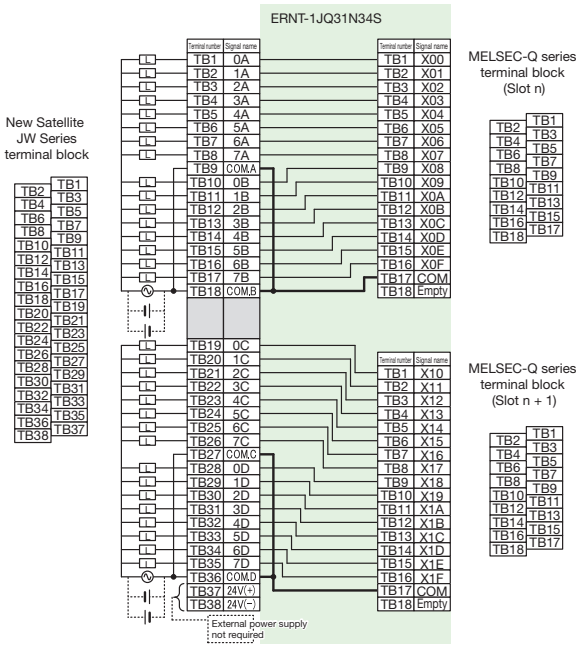

[Specification comparison chart]

Specifications \ Model		New Satellite JW Series JW-34S	MELSEC-Q series QY10
No. of output points		32 points	16 points
Rated load voltage		30VDC / 264VAC	24VDC / 240VAC
Maximum load current		2A/point 5A/common	2A/point 8A/common
Minimum load current		1mA (5VDC)	1mA (5VDC)
Maximum inrush current		—	—
Leakage current at OFF		—	—
Voltage drop at ON		—	—
Response time	OFF→ON	10ms or less	10ms or less
	ON→OFF	10ms or less	12ms or less
Surge suppressor		None	None
Fuse		None	None
Isolation method		Relay isolation	Relay isolation
Wiring method for common		8 points per common	16 points per common
External interface		38-point terminal block	18-point terminal block

Notes
1. In a case where the number of points per common changes from 8 (four circuits) to 16 (two circuits) and the terminal numbers TB9/TB18 and TB27/TB36 on the New Satellite JW Series side are used separately, a wiring change is required.
2. The external power supply connected to terminal numbers TB37 and TB38 on the New Satellite JW Series side is no longer required. Such devices may remain connected though as the conversion adapter is not wired internally for this connection.
3. For ▭ areas, check that the specifications of MELSEC-Q series modules satisfy the specifications of devices and equipment to be connected.
4. For detailed specifications and general specifications not described in the specification comparison charts, refer to the user's manual for the module used. Note that the areas where the specifications differ between the New Satellite JW Series and the MELSEC-Q series are restricted in terms of specifications during replacement. Verify the specifications of the connected devices.

(2) ERNT-1JQ33S Terminal block (38P)→Terminal block (18P) × 2

Conversion adapter model	New Satellite JW Series module model	No. of output points	MELSEC-Q series module model	No. of required modules
ERNT-1JQ33S	JW-33S	32 points	QY22	2 modules

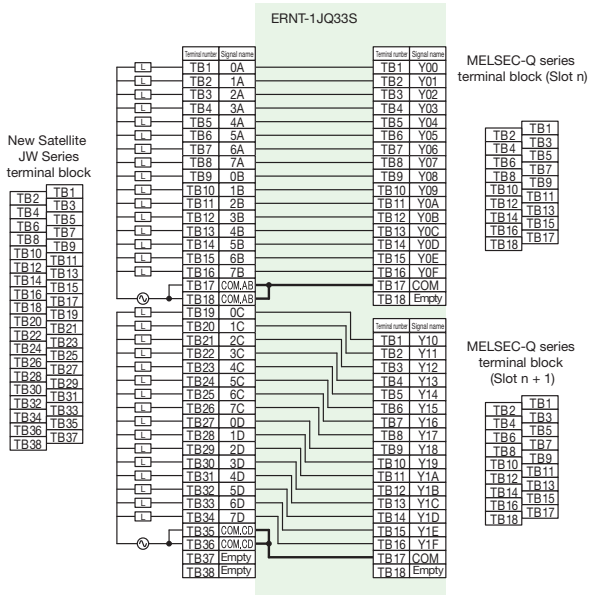

[Specification comparison chart]

Specifications \ Model	New Satellite JW Series	MELSEC-Q series
	JW-33S Triac output	QY22 Triac output
No. of output points	32 points	16 points
Rated load voltage	110-240VAC 50/60Hz	100-240VAC 50/60Hz
Maximum load current	1A/point 4A/common	0.6A/point 4.8A/common
Minimum load current	10mA	25mA
Maximum inrush current	6A 100ms or less	20A, one cycle or less
Leakage current at OFF	1.5mA or less (120VAC 60Hz) 3mA or less (240VAC 60Hz)	1.5mA or less (120VAC 60Hz) 3mA or less (240VAC 60Hz)
Voltage drop at ON	2V or less (1A)	1.5V or less
Response time OFF→ON	1ms or less	1ms + 0.5 cycle or less
Response time ON→OFF	1ms or less	1ms + 0.5 cycle or less
Surge suppressor	CR absorber/varistor	CR absorber
Fuse	4A (not replaceable)	None
Isolation method	Photocoupler isolation	Photocoupler isolation
Wiring method for common	16 points per common	16 points per common
External interface	38-point terminal block	18-point terminal block

Notes 1.For ▭ areas, check that the specifications of MELSEC-Q series modules satisfy the specifications of devices and equipment to be connected.

2. For detailed specifications and general specifications not described in the specification comparison charts, refer to the user's manual for the module used. Note that the areas where the specifications differ between the New Satellite JW Series and the MELSEC-Q series are restricted in terms of specifications during replacement. Verify the specifications of the connected devices.

Conversion Adapter Support Flange (Required)

Specifications

A conversion adapter support flange secures the bottom of a conversion adapter. This is required when a conversion adapter is used. One support flange is required per base unit.
The same support flange used to replace MELSEC-A series with MELSEC-Q series is used.

Conversion adapter support flange model	Specifications
ERNT-AQF12	Conversion adapter support flange for 12 slots of MELSEC-Q series modules
ERNT-AQF8	Conversion adapter support flange for 8 slots of MELSEC-Q series modules
ERNT-AQF5	Conversion adapter support flange for 5 slots of MELSEC-Q series modules
ERNT-AQF3	Conversion adapter support flange for 3 slots of MELSEC-Q series modules

When using a main base unit

◎ Q312B, Q38B, Q35B, Q33B

Unit: mm

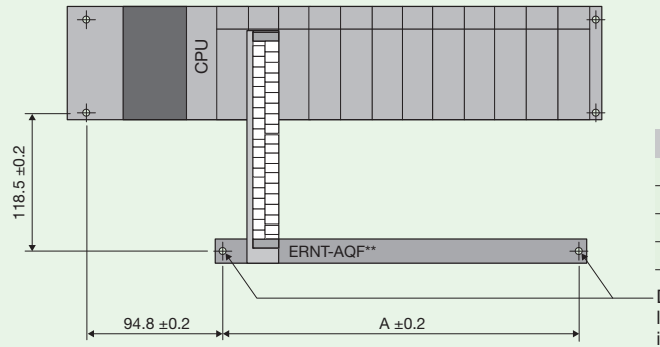

Conversion adapter support flange	A (mm)
ERNT-AQF12	321.2
ERNT-AQF8	210
ERNT-AQF5	126.6
ERNT-AQF3	71

Drill screw holes (M4 screw, 2 locations) at these positions, and install the conversion adapter support flange.

When using an extension base unit

◎ Q612B, Q68B, Q65B, Q63B

Unit: mm

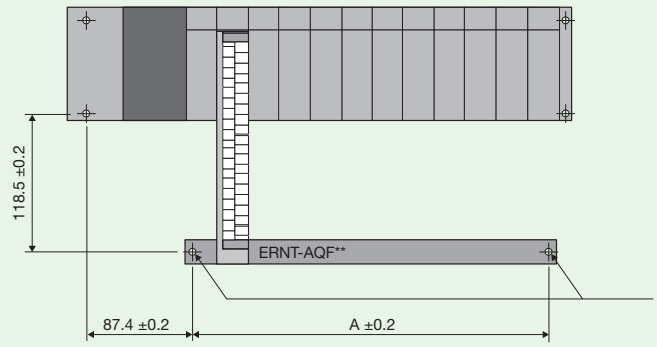

Conversion adapter support flange	A (mm)
ERNT-AQF12	321.2
ERNT-AQF8	210
ERNT-AQF5	126.6
ERNT-AQF3	71

Drill screw holes (M4 screw, 2 locations) at these positions, and install the conversion adapter support flange.

◎ Q55B

Unit: mm

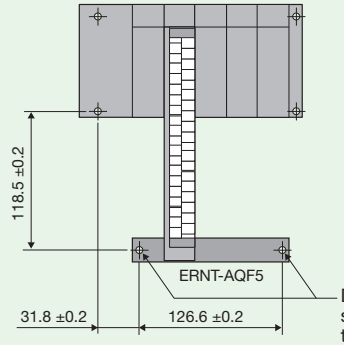

Drill screw holes (M4 screw, 2 locations) at these positions, and install the conversion adapter support flange.

◎ Q52B

Unit: mm

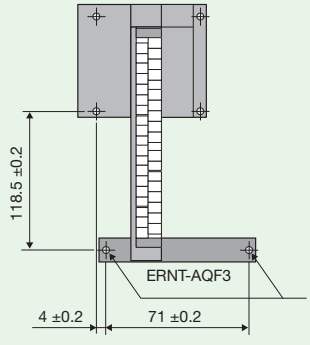

Drill screw holes (M4 screw, 2 locations) at these positions, and install the conversion adapter support flange.

Upgrading Using the Base Adapter or the Q Series Large Type Base Unit (Manufactured by Mitsubishi Electric)

Using the base adapter or the Q series large type base unit eliminates the need to drill mounting holes and determine installation positioning of the support flange.

When the base adapter or the Q series large type base unit is not used

Six or seven new mounting holes are required and the installation positions of the Q series base unit and the support flange need to be determined.

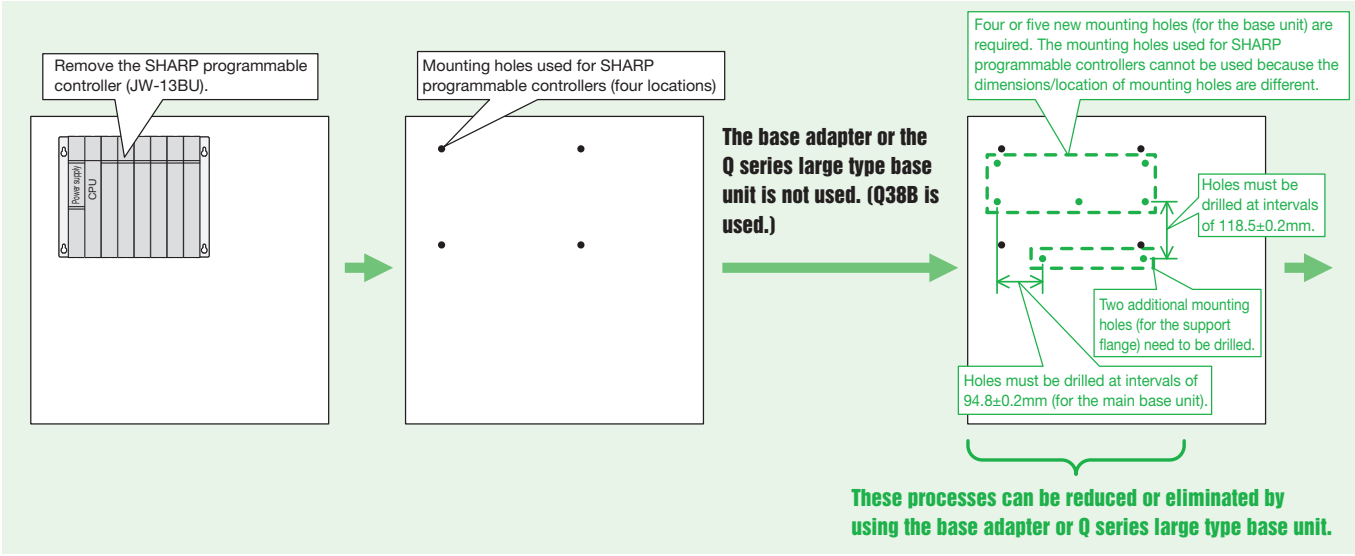

When the base adapter or the Q series large type base unit (the same one used to replace MELSEC-A series large type with MELSEC-Q series) is used

Only a maximum of 2 holes must be drilled due to the base adapter or Q series large type base unit having the same mounting hole height dimensions as the JW series base unit.
(Additional mounting holes are not required if the mounting dimensions before and after replacement are the same and the existing four mounting holes can be used.)
The following figure shows the installation when two existing mounting holes on the left are used.

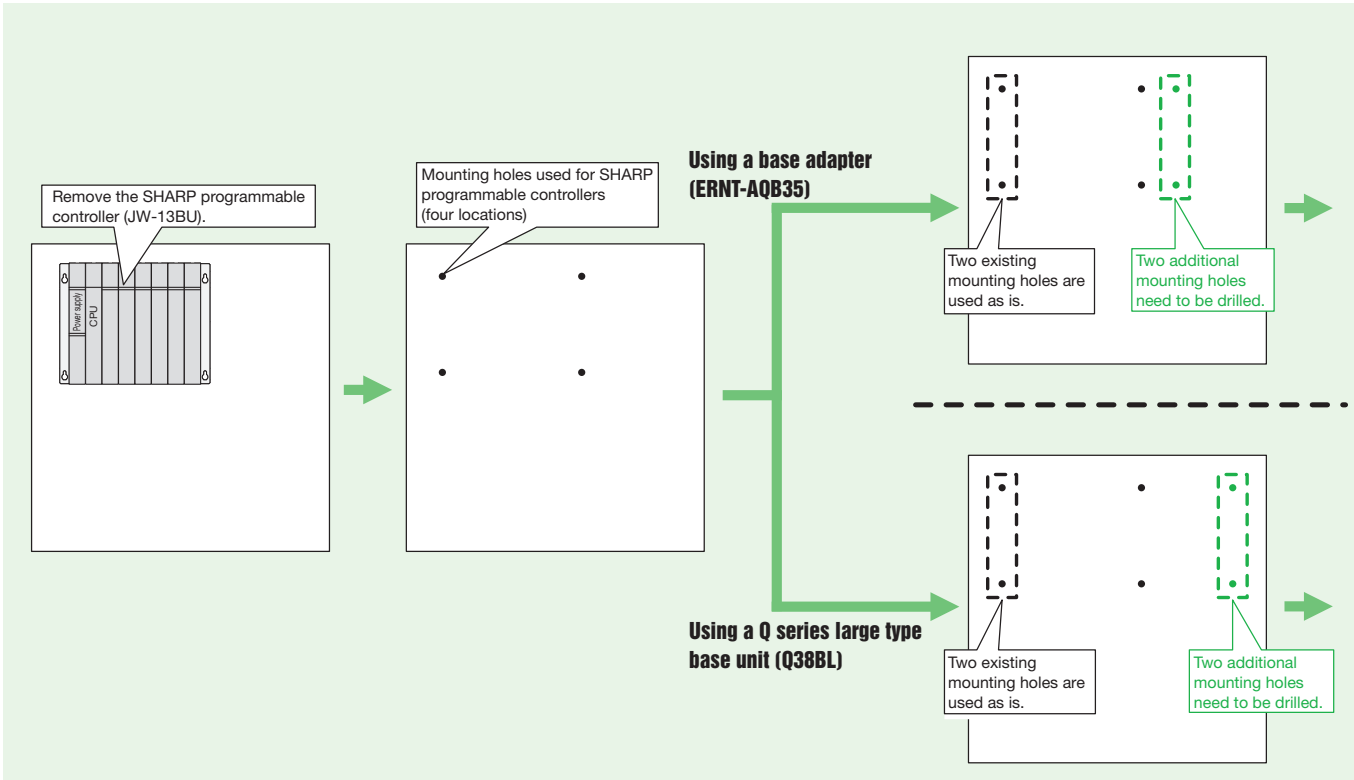

For details, refer to "Mounting Dimensions" on page 5-16, "Comparison of External Dimensions and Mounting Hole Dimensions for Replacements" on page 5-17, and "Slot Positions" on page 5-19.

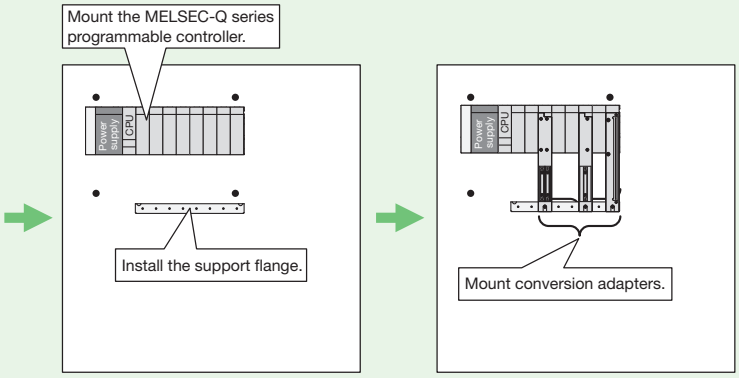
Mount the MELSEC-Q series programmable controller.
Power supply
CPU
Install the support flange.
Power supply
CPU
Mount conversion adapters.

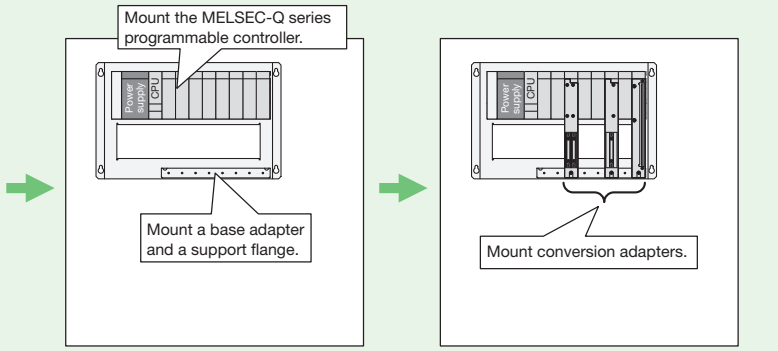
Mount the MELSEC-Q series programmable controller.
Power supply
CPU
Mount a base adapter and a support flange.
Power supply
CPU
Mount conversion adapters.

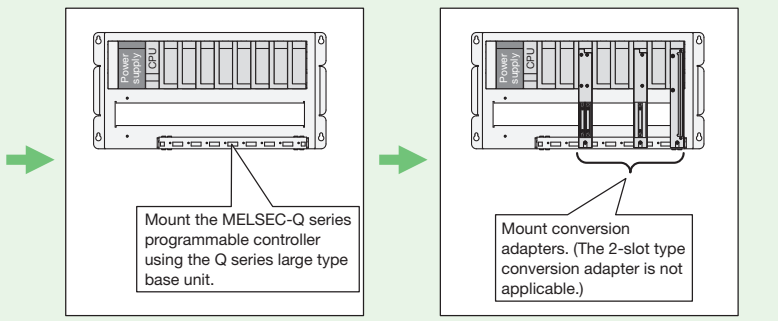
Power supply
CPU
Mount the MELSEC-Q series programmable controller using the Q series large type base unit.
Power supply
CPU
Mount conversion adapters. (The 2-slot type conversion adapter is not applicable.)

Base Adapter

Specifications

Both the MELSEC-Q series base unit and the conversion adapter support flange can be installed on the base adapter without drilling screw holes.
The same base adapter used to replace MELSEC-A series with MELSEC-Q series is used.

Note
- Two additional mounting holes (M5 screw) and four M5 screws need to be prepared by the user to install the base adapter to the control panel. (Additional mounting holes are not required if the mounting dimensions are the same before and after replacement and the existing four mounting holes can be used.)

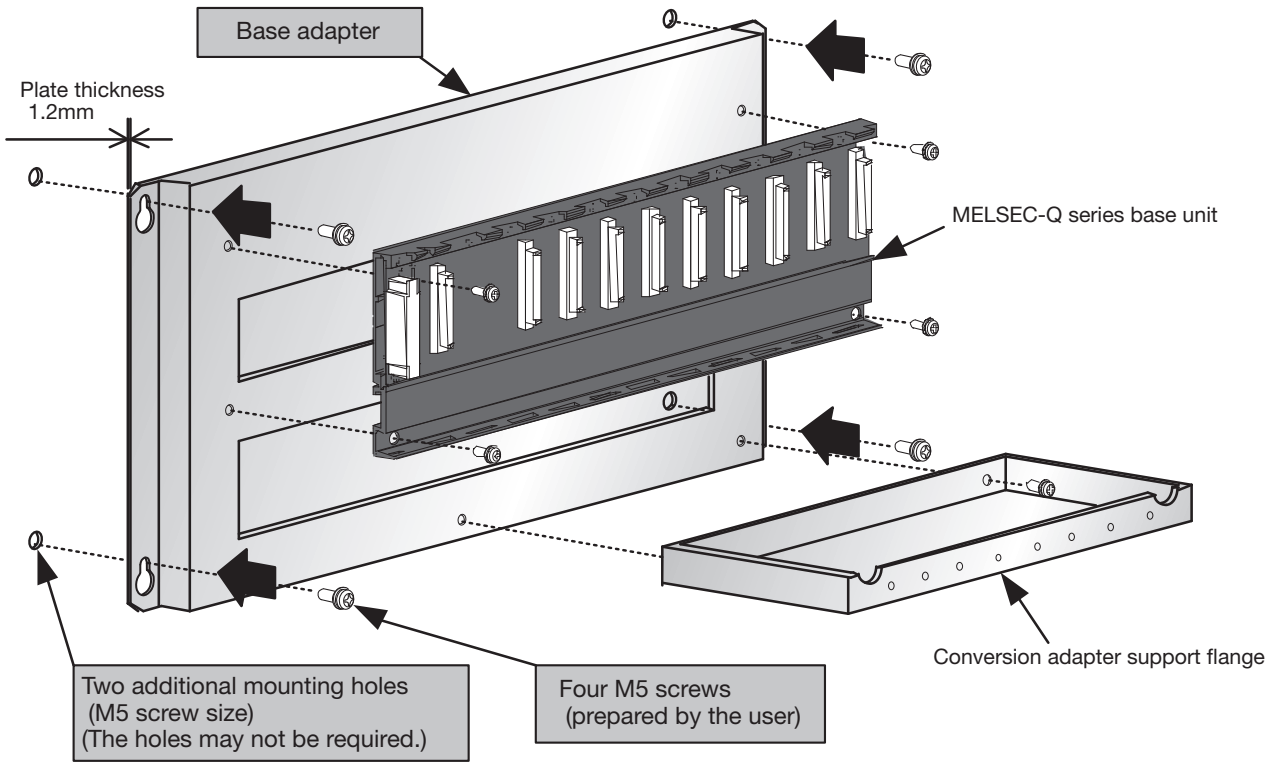

For the base unit models marked with *1 to *5, two or more base adapter models are applicable. Select the most suitable base adapter according to the product dimensions.

Base adapter model	Mountable product						Product dimensions
	MELSEC-Q series base unit					Conversion adapter support flange	Width x Height (mm)
	12 slots	8 slots	5 slots	3 slots	2 slots		
ERNT-AQB38	Q312B					ERNT-AQF12, ERNT-AQF8	480×240
		Q38B (*1)				ERNT-AQF8	
ERNT-AQB35		Q38B (*1)				ERNT-AQF8, ERNT-AQF5	382×240
			Q35B			ERNT-AQF5	
ERNT-AQB32				Q33B		ERNT-AQF3	247×240
ERNT-AQB68	Q612B					ERNT-AQF12, ERNT-AQF8	466×240
		Q68B (*2)				ERNT-AQF8	
ERNT-AQB65		Q68B (*2)				ERNT-AQF8, ERNT-AQF5	352×240
			Q65B (*3) Q55B (*4)			ERNT-AQF5	
ERNT-AQB62				Q63B	Q52B (*5)	ERNT-AQF3	238×240
ERNT-AQB58		Q68B (*2)				ERNT-AQF8	411×240
ERNT-AQB55			Q65B (*3) Q55B (*4)			ERNT-AQF5	297×240
ERNT-AQB52					Q52B (*5)	ERNT-AQF3	183×240

Mounting Dimensions

- The slot positions of modules differ between the New Satellite JW Series and the MELSEC-Q series. After replacement, adjust the length of cables.
- The height is lower than that of the New Satellite JW Series modules.
  (For the width and depth, refer to "Usage Precautions" on page 5-24.)
- Two of the four mounting holes of the base adapter and the Q series large type base unit are the same size as those of the New Satellite JW Series base unit, and therefore only two additional mounting holes need to be drilled on the control panel.
  (Additional mounting holes are not required if the mounting dimensions are the same before and after replacement and the existing four mounting holes can be used.)

● Base adapter + MELSEC-Q series base unit

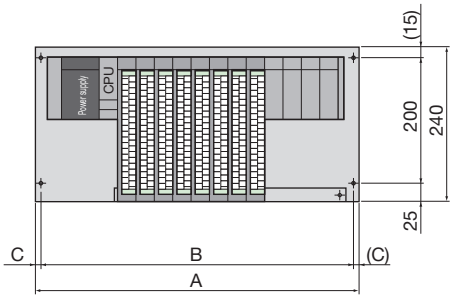

Unit: mm

Base adapter model	Description	A	B	C	Mounting screw hole size
ERNT-AQB38	Main base unit	480	460	10	M5
ERNT-AQB35		382	362	10	
ERNT-AQB32		247	227	10	
ERNT-AQB68	Extension base unit with power supply	466	446	10	
ERNT-AQB65		352	332	10	
ERNT-AQB62		238	218	10	
ERNT-AQB55	Extension base unit without power supply	297	277	10	
ERNT-AQB52		183	163	10	

● Q series large type base unit

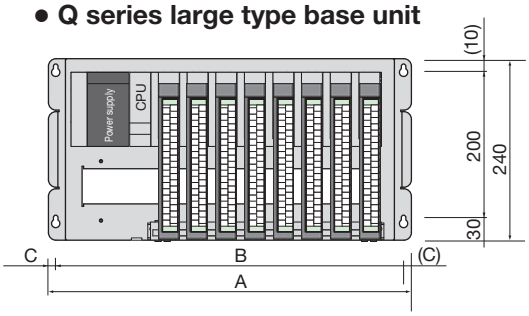

Q series large type base unit model	Description	A	B	C	Mounting screw hole size
Q38BL	Main base unit	480	460	10	M5
Q35BL		382	362	10	
Q68BL	Extension base unit with power supply	466	446	10	
Q65BL		352	332	10	
Q55BL	Extension base unit without power supply	297	277	10	

● (Reference) New Satellite JW Series base unit

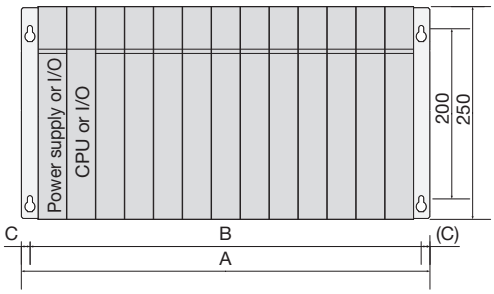

JW series base unit model	Description	A	B	C	Mounting screw hole size
JW-13BU	Main base unit / Extension base unit	480	460	10	M5
JW-8BU		310	290	10	
JW-6BU		242	222	10	
JW-4BU		174	154	10	

Comparison of External Dimensions and Mounting Hole Dimensions for Replacements

Use the following tables to check the differences of external dimensions and mounting hole dimensions before and after replacement.

Notes

- "▲" indicates that the dimensions will be larger after replacement as shown in the example below. Reconsider the installation position.
- If there are not enough mounting slots, use an extension base unit.
- The JW□□BU within the New Satellite JW Series is a shared main/extension base unit. Note that the number of slots varies between models that have/do not have built-in power supplies and/or CPUs.
- If your JW series base unit model is not listed here, check the number of slots, external dimensions, mounting dimensions, and other specifications and then select the optimal base adapter or Q series large type base unit.

Example) Replacing New Satellite JW Series (JW-8BU) with base adapter + MELSEC-Q series base unit (ERNT-AQB35+Q38B)

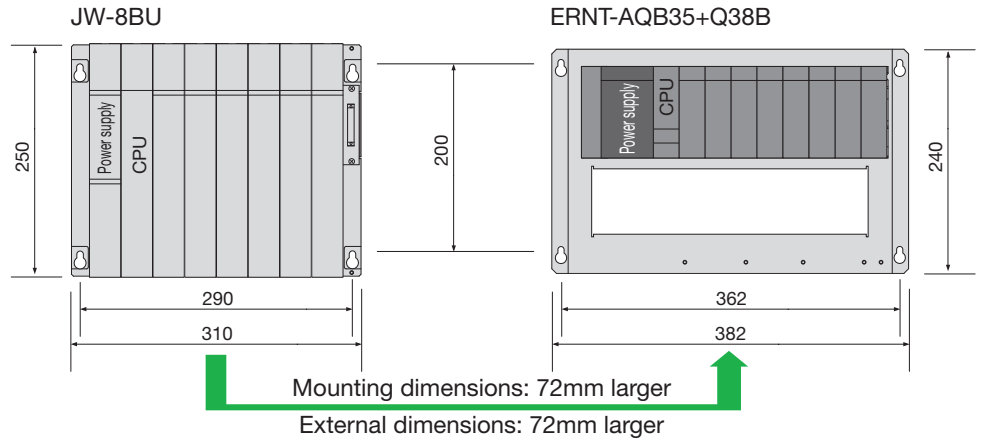

When using a main base unit

1. Replacing with MELSEC-Q series base unit or MELSEC-Q series base unit + base adapter

◎: Same, ○: JW series is larger, ▲: JW series is smaller

JW series base unit			MELSEC-Q series base unit							Base adapter					Mounting Conversion adapter support flange	Remarks
Model	Includes power supply	Maximum number of slots	Model	Includes power supply	Maximum number of slots	Comparison*1 (MELSEC-Q series - JW series) External dimensions Width	Height	Mounting Dimensions Width	Height	Model	Comparison*2 (base adapter - JW series) External dimensions Width	Height	Mounting Dimensions Width	Height		
JW-13BU	Yes	11	Q312B	Yes	12	○ (-41)	○ (-152)	○ (-41)	○ (-120)	ERNT-AQB38	◎	○ (-10)	◎	◎	ERNT-AQF12	·Drill mounting holes in panel surface not required when using the base adapter
			Q38B	Yes	8	○ (-152)	○ (-152)	○ (-152)	○ (-120)	ERNT-AQB38	◎	○ (-10)	◎	◎	ERNT-AQF8	·Drill mounting holes in panel surface not required when using the base adapter
JW-8BU	Yes	6	Q312B	Yes	12	▲ (129)	○ (-152)	▲ (129)	○ (-120)	ERNT-AQB38	▲ (170)	○ (-10)	▲ (170)	◎	ERNT-AQF12	·Drill mounting holes in panel surface required except for 2 vertical holes when using the base adapter
			Q38B	Yes	8	▲ (18)	○ (-152)	▲ (18)	○ (-120)	ERNT-AQB35	▲ (72)	○ (-10)	▲ (72)	◎	ERNT-AQF8	·Drill mounting holes in panel surface required except for 2 vertical holes when using the base adapter
			Q35B	Yes	5	○ (-65)	○ (-152)	○ (-65.6)	○ (-120)	ERNT-AQB35	▲ (72)	○ (-10)	▲ (72)	◎	ERNT-AQF5	·Drill mounting holes in panel surface required except for 2 vertical holes when using the base adapter
JW-6BU	Yes	4	Q312B	Yes	12	▲ (197)	○ (-152)	▲ (197)	○ (-120)	ERNT-AQB38	▲ (238)	○ (-10)	▲ (238)	◎	ERNT-AQF12	·Drill mounting holes in panel surface required except for 2 vertical holes when using the base adapter
			Q38B	Yes	8	▲ (86)	○ (-152)	▲ (86)	○ (-120)	ERNT-AQB35	▲ (140)	○ (-10)	▲ (140)	◎	ERNT-AQF8	·Drill mounting holes in panel surface required except for 2 vertical holes when using the base adapter
			Q35B	Yes	5	▲ (3)	○ (-152)	▲ (2.4)	○ (-120)	ERNT-AQB35	▲ (140)	○ (-10)	▲ (140)	◎	ERNT-AQF5	·Drill mounting holes in panel surface required except for 2 vertical holes when using the base adapter
			Q33B	Yes	3	○ (-53)	○ (-152)	○ (-53)	○ (-120)	ERNT-AQB32	▲ (5)	○ (-10)	▲ (5)	◎	ERNT-AQF3	·Drill mounting holes in panel surface required except for 2 vertical holes when using the base adapter
JW-4BU	Yes	2	Q35B	Yes	5	▲ (71)	○ (-152)	▲ (70.4)	○ (-120)	ERNT-AQB35	▲ (208)	○ (-10)	▲ (208)	◎	ERNT-AQF5	·Drill mounting holes in panel surface required except for 2 vertical holes when using the base adapter
			Q33B	Yes	3	▲ (15)	○ (-152)	▲ (15)	○ (-120)	ERNT-AQB32	▲ (73)	○ (-10)	▲ (73)	◎	ERNT-AQF3	·Drill mounting holes in panel surface required except for 2 vertical holes when using the base adaptera

*1: Values in parentheses indicate differences in dimensions (unit: mm) between the MELSEC-Q series compatible modules and JW series modules.
*2: Values in parentheses indicate differences in dimensions (unit: mm) between the base adapter and JW series modules.

2. Replacing with the MELSEC-Q series large type base unit

◎: Same, ○: JW series is larger, ▲: JW series is smaller

JW series base unit			MELSEC-Q series large type base unit							Remarks
Model	Includes power supply	Maximum number of slots	Model	Includes power supply	Maximum number of slots	Comparison*1 (MELSEC-Q series - JW series) External dimensions Width	Height	Mounting Dimensions Width	Height	
JW-13BU	Yes	11	Q38BL	Yes	8	◎	○ (-10)	◎	◎	·No large base with at least 9 slots ·Maximum of 8 slots, so insufficient by 3 slots ·Drill mounting holes in panel surface not required
JW-8BU	Yes	6	Q38BL	Yes	8	▲ (170)	○ (-10)	▲ (170)	◎	·Drill mounting holes in panel surface required except for 2 vertical holes
			Q35BL	Yes	5	▲ (72)	○ (-10)	▲ (72)	◎	·Drill mounting holes in panel surface required except for 2 vertical holes
JW-6BU	Yes	4	Q35BL	Yes	5	▲ (140)	○ (-10)	▲ (140)	◎	·Drill mounting holes in panel surface required except for 2 vertical holes
JW-4BU	Yes	2	Q35BL	Yes	5	▲ (208)	○ (-10)	▲ (208)	◎	·Drill mounting holes in panel surface required except for 2 vertical holes

*1: Values in parentheses indicate differences in dimensions (unit: mm) between the Q series large type base and JW series modules.

When using an extension base unit

1. Replacing with MELSEC-Q series base unit or MELSEC-Q series base unit + base adapter

◎: Same, ○: JW series is larger, ▲: JW series is smaller

JW series base unit			MELSEC-Q series base unit								Base adapter						Mounting Conversion adapter support flange	Remarks
Model	Includes power supply	Maximum number of slots	Model	Includes power supply	Maximum number of slots	Comparison*1 (MELSEC-Q series - JW series) External dimensions Width	External dimensions Height	Mounting Dimensions Width	Mounting Dimensions Height		Model	Comparison*2 (base adapter - JW series) External dimensions Width	External dimensions Height	Mounting Dimensions Width	Mounting Dimensions Height			
JW-13BU	Yes	12	Q612B	Yes	12	○ (-41)	○ (-152)	○ (-43)	○ (-120)		ERNT-AQB68	○ (-14)	○ (-10)	○ (-14)	◎		ERNT-AQF12	
			Q68B	Yes	8	○ (-152)	○ (-152)	○ (-154)	○ (-120)		ERNT-AQB65	○ (-128)	○ (-10)	○ (-128)	◎		ERNT-AQF12	·There is no base unit without power supply having 6 slots or more. ·Maximum of 12 slots, so insufficient by 1 slot
	No	13	Q612B	Yes	12	○ (-41)	○ (-152)	○ (-43)	○ (-120)		ERNT-AQB68	○ (-14)	○ (-10)	○ (-14)	◎		ERNT-AQF12	·There is no base unit without power supply having 6 slots or more. ·Maximum of 12 slots, so insufficient by 1 slot
JW-8BU	Yes	7	Q612B	Yes	12	▲ (129)	○ (-152)	▲ (127)	○ (-120)		ERNT-AQB68	▲ (156)	○ (-10)	▲ (156)	◎		ERNT-AQF12	
			Q68B	Yes	8	▲ (18)	○ (-152)	▲ (16)	○ (-120)		ERNT-AQB65	▲ (42)	○ (-10)	▲ (42)	◎		ERNT-AQF8	
	No	8	Q612B	Yes	12	▲ (129)	○ (-152)	▲ (127)	○ (-120)		ERNT-AQB68	▲ (156)	○ (-10)	▲ (156)	◎		ERNT-AQF12	·There is no base unit without power supply having 6 slots or more.
			Q68B	Yes	8	▲ (18)	○ (-152)	▲ (16)	○ (-120)		ERNT-AQB65	▲ (42)	○ (-10)	▲ (42)	◎		ERNT-AQF8	·There is no base unit without power supply having 6 slots or more.
JW-6BU	Yes	5	Q612B	Yes	12	▲ (197)	○ (-152)	▲ (195)	○ (-120)		ERNT-AQB68	▲ (224)	○ (-10)	▲ (224)	◎		ERNT-AQF12	
			Q68B	Yes	8	▲ (86)	○ (-152)	▲ (84)	○ (-120)		ERNT-AQB65	▲ (110)	○ (-10)	▲ (110)	◎		ERNT-AQF8	
			Q65B	Yes	5	▲ (3)	○ (-152)	▲ (0.4)	○ (-120)		ERNT-AQB55	▲ (55)	○ (-10)	▲ (55)	◎		ERNT-AQF5	
			Q55B	No	5	○ (-53)	○ (-152)	○ (-55)	○ (-120)		ERNT-AQB55	▲ (55)	○ (-10)	▲ (55)	◎		ERNT-AQF5	
	No	6	Q612B	Yes	12	▲ (197)	○ (-152)	▲ (195)	○ (-120)		ERNT-AQB68	▲ (224)	○ (-10)	▲ (224)	◎		ERNT-AQF12	·There is no base unit without power supply having 6 slots or more.
			Q68B	Yes	8	▲ (86)	○ (-152)	▲ (84)	○ (-120)		ERNT-AQB65	▲ (110)	○ (-10)	▲ (110)	◎		ERNT-AQF8	·There is no base unit without power supply having 6 slots or more.
			Q65B	Yes	5	▲ (3)	○ (-152)	▲ (0.4)	○ (-120)		ERNT-AQB55	▲ (55)	○ (-10)	▲ (55)	◎		ERNT-AQF5	·Maximum of 5 slots, so insufficient by 1 slot
			Q55B	No	5	○ (-53)	○ (-152)	○ (-55)	○ (-120)		ERNT-AQB55	▲ (55)	○ (-10)	▲ (55)	◎		ERNT-AQF5	·Maximum of 5 slots, so insufficient by 1 slot
JW-4BU	Yes	3	Q68B	Yes	8	▲ (154)	○ (-152)	▲ (152)	○ (-120)		ERNT-AQB65	▲ (178)	○ (-10)	▲ (178)	◎		ERNT-AQF8	
			Q65B	Yes	5	▲ (71)	○ (-152)	▲ (68.4)	○ (-120)		ERNT-AQB55	▲ (123)	○ (-10)	▲ (123)	◎		ERNT-AQF5	
			Q63B	Yes	3	▲ (15)	○ (-152)	▲ (13)	○ (-120)		ERNT-AQB62	▲ (64)	○ (-10)	▲ (64)	◎		ERNT-AQF3	
			Q55B	No	5	▲ (15)	○ (-152)	▲ (13)	○ (-120)		ERNT-AQB55	▲ (123)	○ (-10)	▲ (123)	◎		ERNT-AQF5	
			Q52B	No	5	○ (-68)	○ (-152)	○ (-70.5)	○ (-120)		ERNT-AQB52	▲ (9)	○ (-10)	▲ (9)	◎		ERNT-AQF3	·Maximum of 2 slots, so insufficient by 1 slot
	No	4	Q612B	Yes	12	▲ (265)	○ (-152)	▲ (263)	○ (-120)		ERNT-AQB68	▲ (292)	○ (-10)	▲ (292)	◎		ERNT-AQF12	·There is no base unit without power supply having 6 slots or more.
			Q68B	Yes	8	▲ (154)	○ (-152)	▲ (152)	○ (-120)		ERNT-AQB65	▲ (178)	○ (-10)	▲ (178)	◎		ERNT-AQF8	·There is no base unit without power supply having 6 slots or more.
			Q65B	Yes	5	▲ (71)	○ (-152)	▲ (68.4)	○ (-120)		ERNT-AQB55	▲ (123)	○ (-10)	▲ (123)	◎		ERNT-AQF5	
			Q63B	Yes	3	▲ (15)	○ (-152)	▲ (13)	○ (-120)		ERNT-AQB62	▲ (64)	○ (-10)	▲ (64)	◎		ERNT-AQF3	·Maximum of 3 slots, so insufficient by 1 slot
			Q55B	No	5	▲ (15)	○ (-152)	▲ (13)	○ (-120)		ERNT-AQB55	▲ (123)	○ (-10)	▲ (123)	◎		ERNT-AQF5	
			Q52B	No	5	○ (-68)	○ (-152)	○ (-70.5)	○ (-120)		ERNT-AQB52	▲ (9)	○ (-10)	▲ (9)	◎		ERNT-AQF3	·Maximum of 2 slots, so insufficient by 2 slots

*1: Values in parentheses indicate differences in dimensions (unit: mm) between the MELSEC-Q series compatible modules and JW series modules.
*2: Values in parentheses indicate differences in dimensions (unit: mm) between the base adapter and JW series modules.

2. Replacing with MELSEC-Q series large type base unit

◎: Same, ○: JW series is larger, ▲: JW series is smaller

JW series base unit			MELSEC-Q series large type base unit								Remarks
Model	Includes power supply	Maximum number of slots	Model	Includes power supply	Maximum number of slots	Comparison*1 (MELSEC-Q series - JW series) External dimensions Width	External dimensions Height	Mounting Dimensions Width	Mounting Dimensions Height		
JW-13BU	Yes	12	Q68BL	Yes	8	○ (-14)	○ (-10)	○ (-14)	◎		·No large base with at least 9 slots ·Maximum of 8 slots, so insufficient by 4 slots ·Drill mounting holes in panel surface required except for 2 vertical holes
	No	13	Q68BL	Yes	8	○ (-14)	○ (-10)	○ (-14)	◎		·No large base with at least 9 slots ·Maximum of 8 slots, so insufficient by 5 slots ·Drill mounting holes in panel surface required except for 2 vertical holes
JW-8BU	Yes	7	Q68BL	Yes	8	▲ (156)	○ (-10)	▲ (156)	◎		·Drill mounting holes in panel surface required except for 2 vertical holes
	No	8	Q68BL	Yes	8	▲ (156)	○ (-10)	▲ (156)	◎		·Drill mounting holes in panel surface required except for 2 vertical holes
JW-6BU	Yes	5	Q65BL	Yes	6	▲ (110)	○ (-10)	▲ (110)	◎		·Drill mounting holes in panel surface required except for 2 vertical holes
			Q55BL	No	5	▲ (55)	○ (-10)	▲ (55)	◎		·Drill mounting holes in panel surface required except for 2 vertical holes
	No	6	Q68BL	Yes	8	▲ (224)	○ (-10)	▲ (224)	◎		·Drill mounting holes in panel surface required except for 2 vertical holes
			Q65BL	Yes	6	▲ (110)	○ (-10)	▲ (110)	◎		·Drill mounting holes in panel surface required except for 2 vertical holes
			Q55BL	No	5	▲ (55)	○ (-10)	▲ (55)	◎		·Drill mounting holes in panel surface required except for 2 vertical holes ·Maximum of 5 slots, so insufficient by 1 slot
JW-4BU	Yes	3	Q65BL	Yes	6	▲ (178)	○ (-10)	▲ (178)	◎		·Drill mounting holes in panel surface required except for 2 vertical holes
			Q55BL	No	5	▲ (123)	○ (-10)	▲ (123)	◎		·Drill mounting holes in panel surface required except for 2 vertical holes
	No	4	Q65BL	Yes	6	▲ (178)	○ (-10)	▲ (178)	◎		·Drill mounting holes in panel surface required except for 2 vertical holes
			Q55BL	No	5	▲ (123)	○ (-10)	▲ (123)	◎		·Drill mounting holes in panel surface required except for 2 vertical holes

*1: Values in parentheses indicate differences in dimensions (unit: mm) between the Q series large type base and JW series modules.

Slot Positions

The slot positions differ between the New Satellite JW Series and the MELSEC-Q series. After replacement, change the slot positions of modules and adjust the length of cables.

Note

Values in parentheses indicate differences in dimensions with JW series modules.

When using a main base unit

(1) JW-13BU → ERNT-AQB38 + Q312B / Q38BL

Base adapter + MELSEC-Q series base unit

Unit: mm

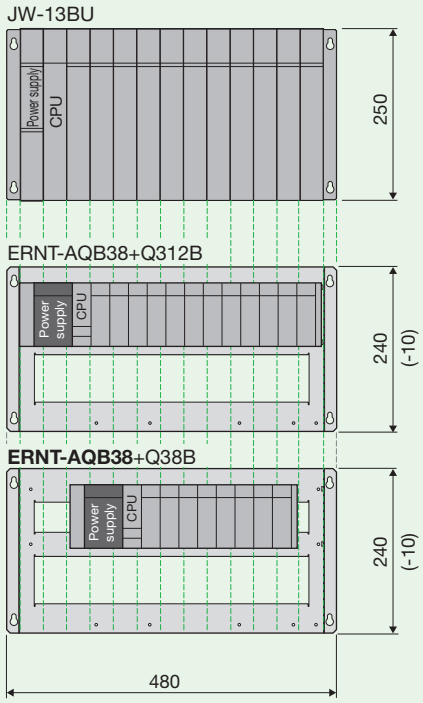

Q series large type base unit

Unit: mm

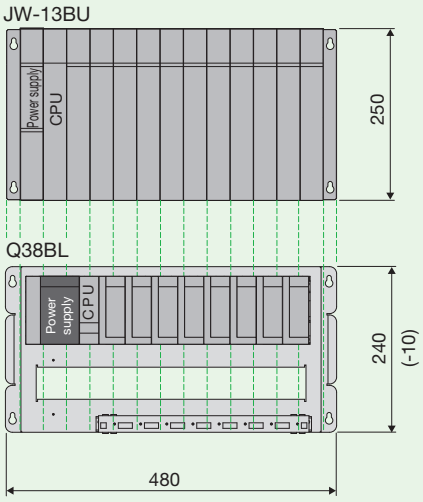

(2) JW-8BU → ERNT-AQB38+Q312B / ERNT-AQB35+Q38B / ERNT-AQB35+Q35B / Q38BL

Base adapter + MELSEC-Q series base unit

Unit: mm

Left-aligned installation

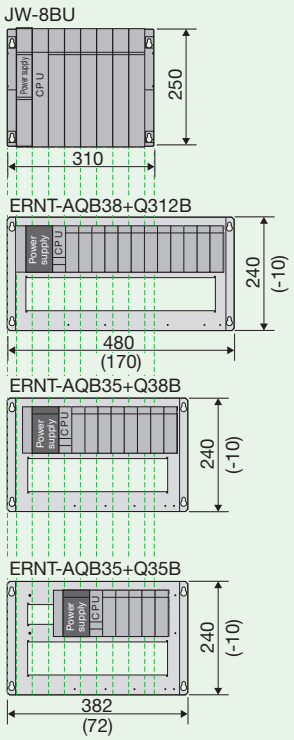

Right-aligned installation

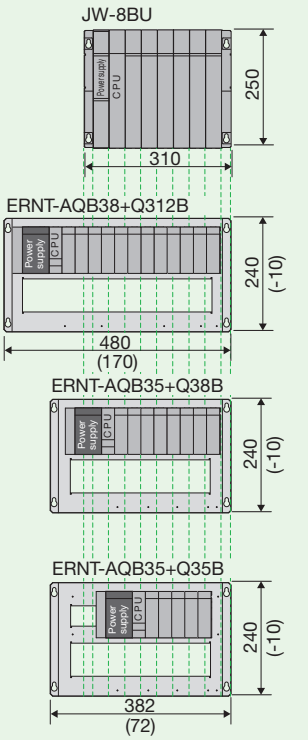

Q series large type base unit

Unit: mm

Left-aligned installation

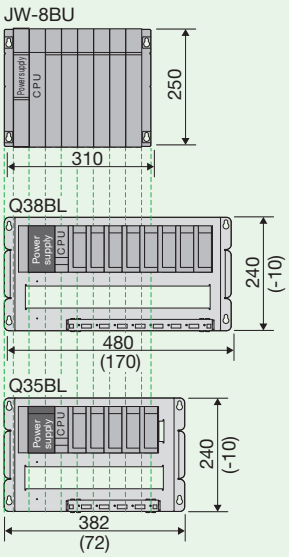

Right-aligned installation

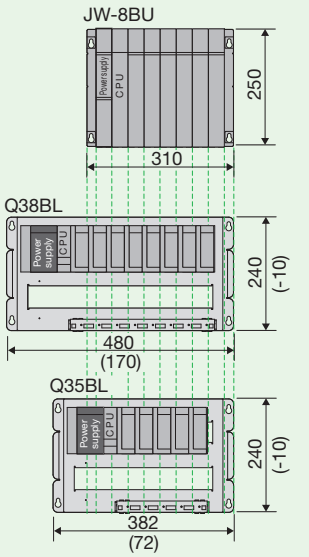

(3) JW-6BU → ERNT-AQB35+Q38B / ERNT-AQB35+Q35B / ERNT-AQB32+Q33B / Q35BL

Base adapter + MELSEC-Q series base unit

Left-aligned installation

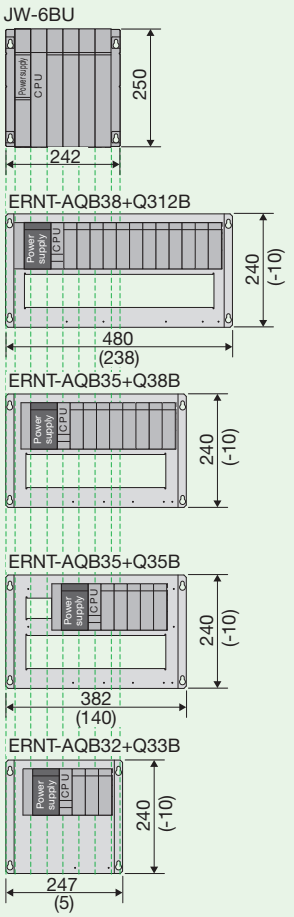

Right-aligned installation

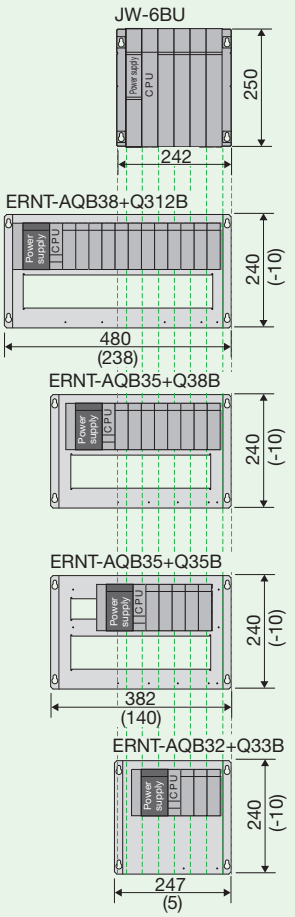

Q series large type base unit

Unit: mm

Left-aligned installation

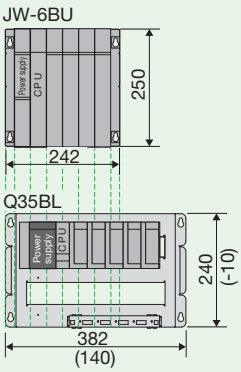

Right-aligned installation

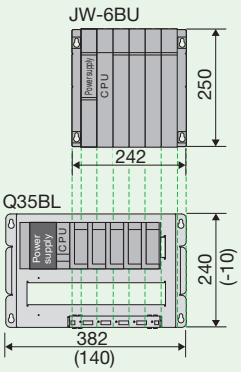

(4) JW-4BU → ERNT-AQB35+Q35B / ERNT-AQB32+Q33B / Q35BL

Base adapter + MELSEC-Q series base unit

Left-aligned installation

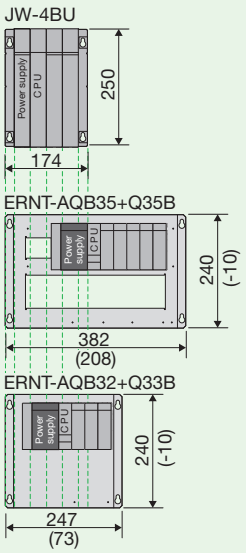

Right-aligned installation

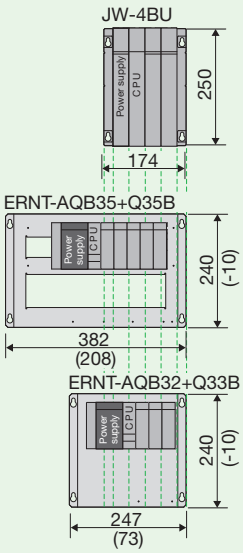

Q series large type base unit

Unit: mm

Left-aligned installation

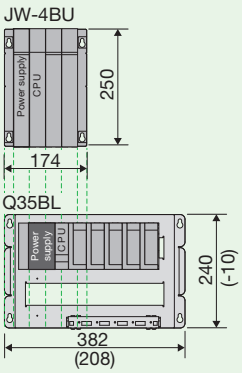

Right-aligned installation

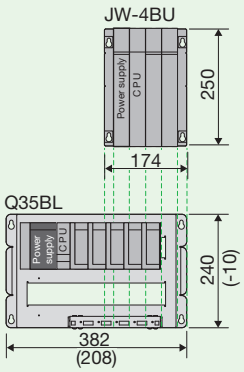

When using an extension base unit

(1) JW-13BU → ERNT-AQB68 + Q612B / Q68BL

Base adapter + MELSEC-Q series base unit

Left-aligned installation

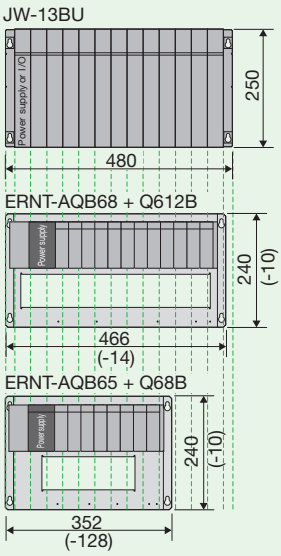

Right-aligned installation

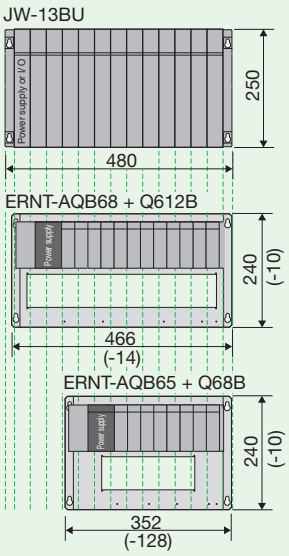

Q series large type base unit

Left-aligned installation

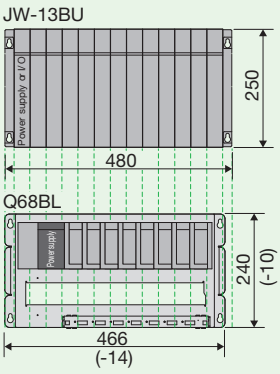

Right-aligned installation

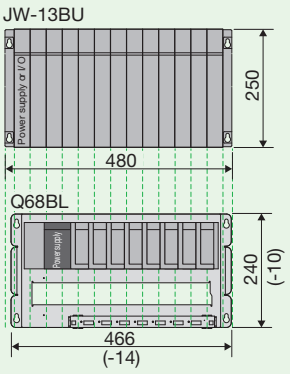

Unit: mm

(2) JW-8BU → ERNT-AQB68+Q612B / ERNT-AQB65+Q68B / Q68BL

Base adapter + MELSEC-Q series base unit

Left-aligned installation

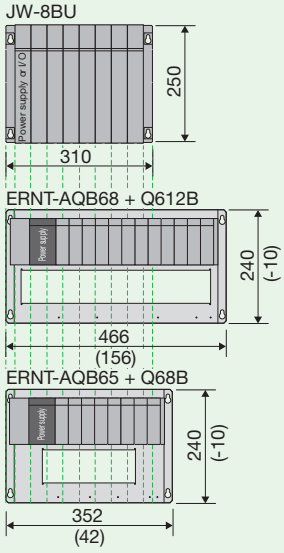

Right-aligned installation

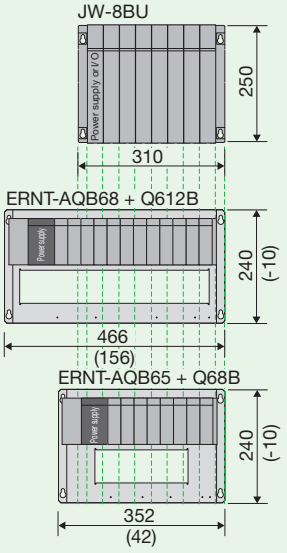

Q series large type base unit

Left-aligned installation

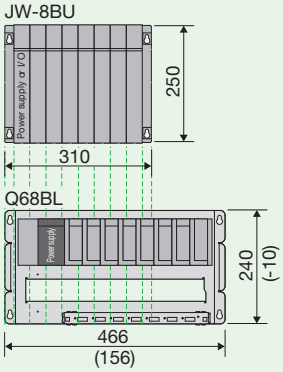

Right-aligned installation

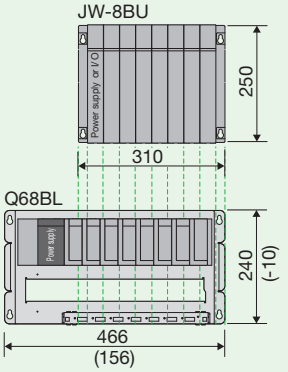

Unit: mm

(3) JW-6BU → ERNT-AQB68+Q612B / ERNT-AQB65+Q68B / ERNT-AQB55+Q65B / ERNT-AQB55+Q55B / Q68BL / Q65BL

Base adapter + MELSEC-Q series base unit

Q series large type base unit

Unit: mm

Left-aligned installation

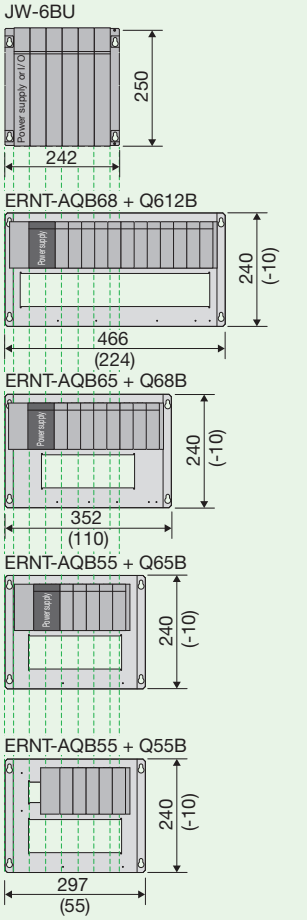

Right-aligned installation

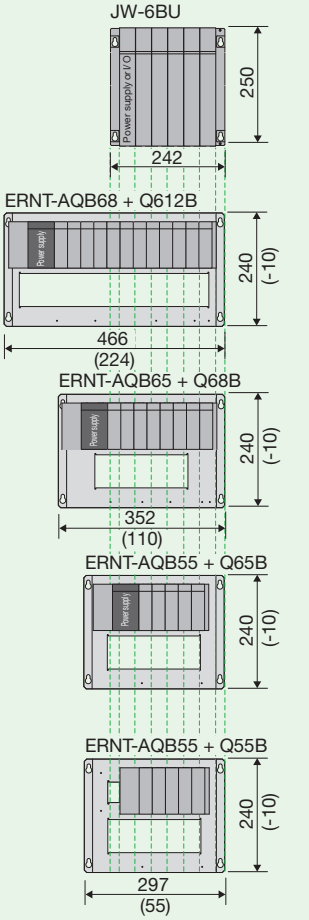

Left-aligned installation

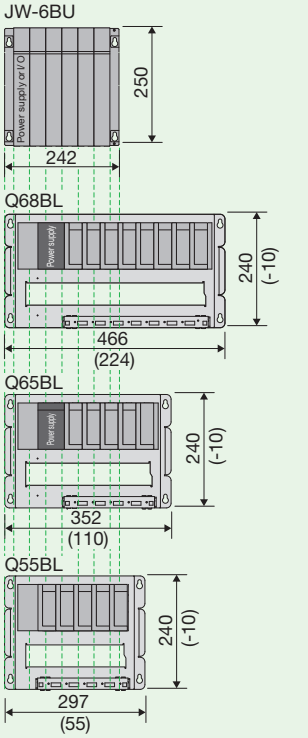

Right-aligned installation

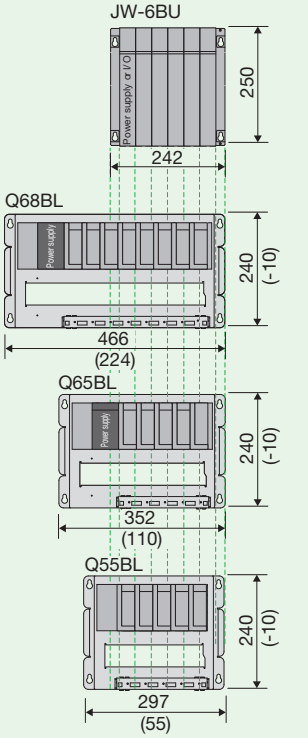

(4) JW-4BU → ERNT-AQB65+Q68B / ERNT-AQB55+Q65B / ERNT-AQB55+Q55B / ERNT-AQB52+Q52B / Q65BL / Q55BL

Base adapter + MELSEC-Q series base unit

Q series large type base unit

Unit: mm

Left-aligned installation

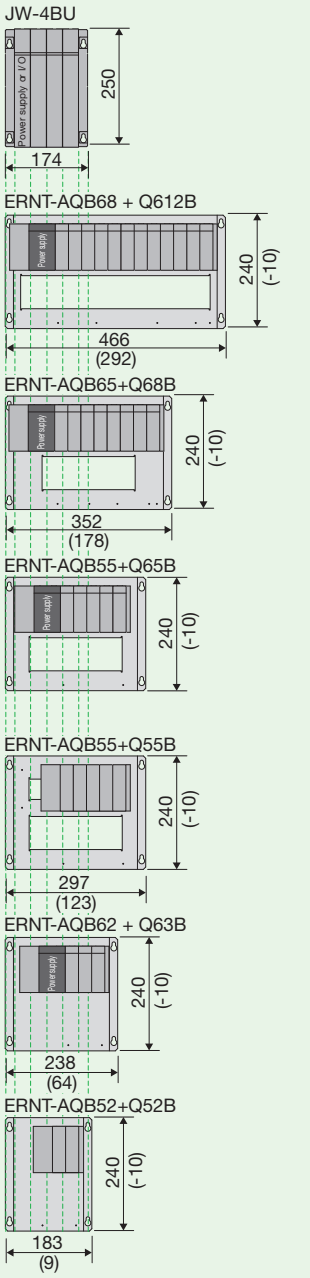

Right-aligned installation

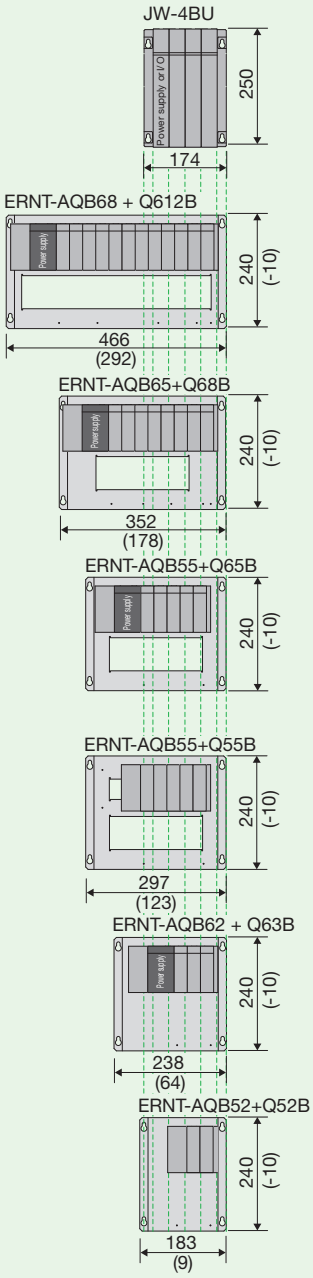

Left-aligned installation

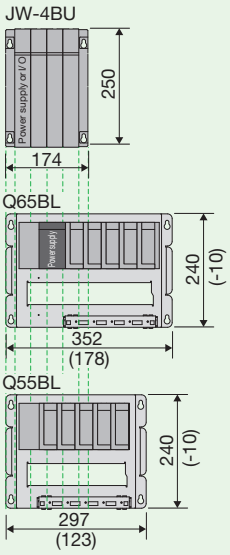

Right-aligned installation

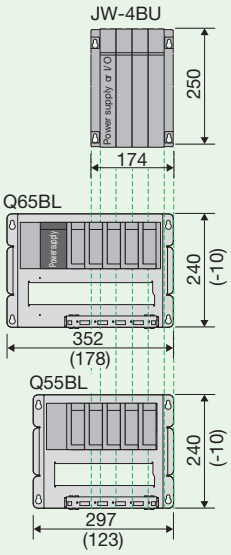

Usage Precautions

Module Width

(1) Since the width of MELSEC-Q series modules is smaller (New Satellite JW Series: 33.5mm → MELSEC-Q series: 27.4mm), the wiring area becomes smaller as well. Check the wiring area when mounting a conversion adapter.

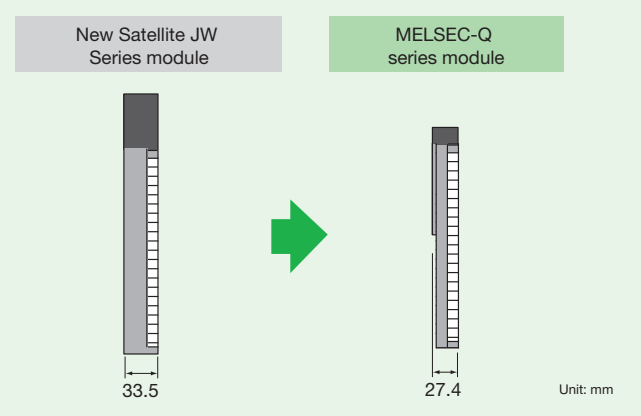

(2) If the wiring causes interference with adjacent modules, take an action such as lifting the wiring forward to prevent interference.

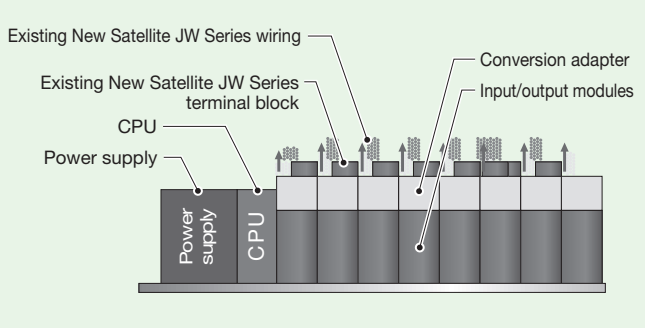

(3) If interference still occurs even when you lift the wiring, keep the next slot open to secure a space for wiring.

Example) Q312B

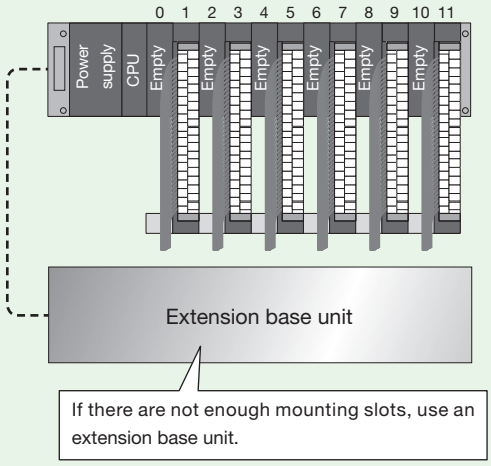

Mount a connector cover (accessory) or blank cover module (QG60) to prevent dust from entering the connector of a spare space where a module is not mounted.

(4) If a problem still exist, consider using the Mitsubishi Electric Q series large type base unit (wiring space of 37.5mm).
Note: The 2-slot type conversion adapter is not applicable.

Depth

The following tables list the depth dimensions. The depth is larger, so verification is required for mounting.
The values in parentheses, which are 11.8mm smaller, represent the depth when the base adapter or Q series large type base unit is not used.

1-slot type

New Satellite JW : New Satellite JW Series MELSEC-Q : MELSEC-Q series

Conversion adapter	ERNT-1JQ11N12N ERNT-1JQ12S	ERNT-1JQ13S	ERNT-1JQ32N34N ERNT-1JQ32S	ERNT-1JQ64NC ERNT-1JQ32SC62SC
Depth	143.8mm (132mm)	165.8mm (154mm)	164.5mm (152.7mm)	173.2mm (161.4mm)
Mounting diagram	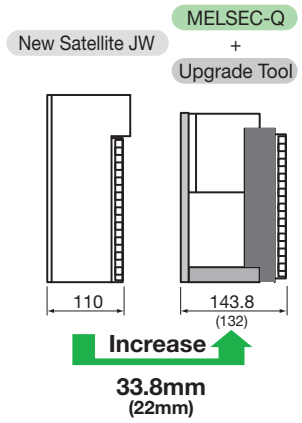	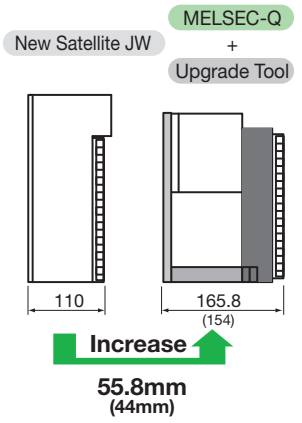	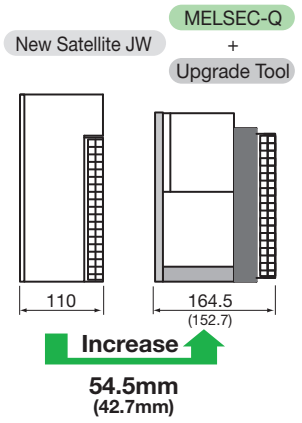	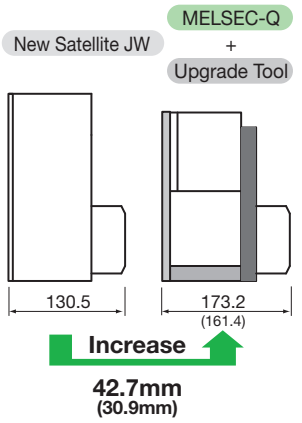

2-slot type

Conversion adapter	ERNT-1JQ31N34S	ERNT-1JQ33S
Depth	153.4mm (141.6mm)	175.4mm (163.6mm)
Mounting diagram	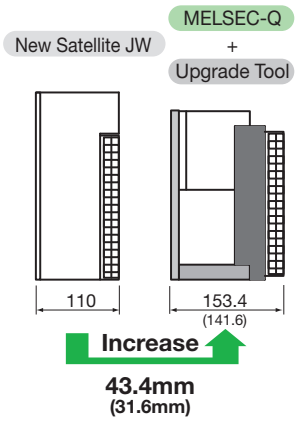	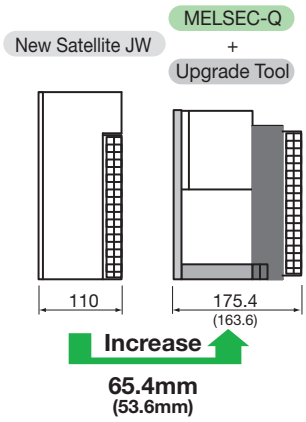

*: Each depth is measured from the panel surface.
New Satellite JW Series: Base unit + Input/output modules + Terminal block (connector)
MELSEC-Q series + Upgrade tool: Base adapter + Base unit + Input/output modules + Conversion Adapter + Terminal block (connector)

Check for Interference with Adjacent Modules

Leave one slot open to prevent interference of the terminal blocks when the adjacent conversion adapters are as follows.
Note that an open slot is not required when the MELSEC-Q series large type base unit is used because there will be a gap between modules.
Note: The 2-slot type conversion adapter is not applicable.

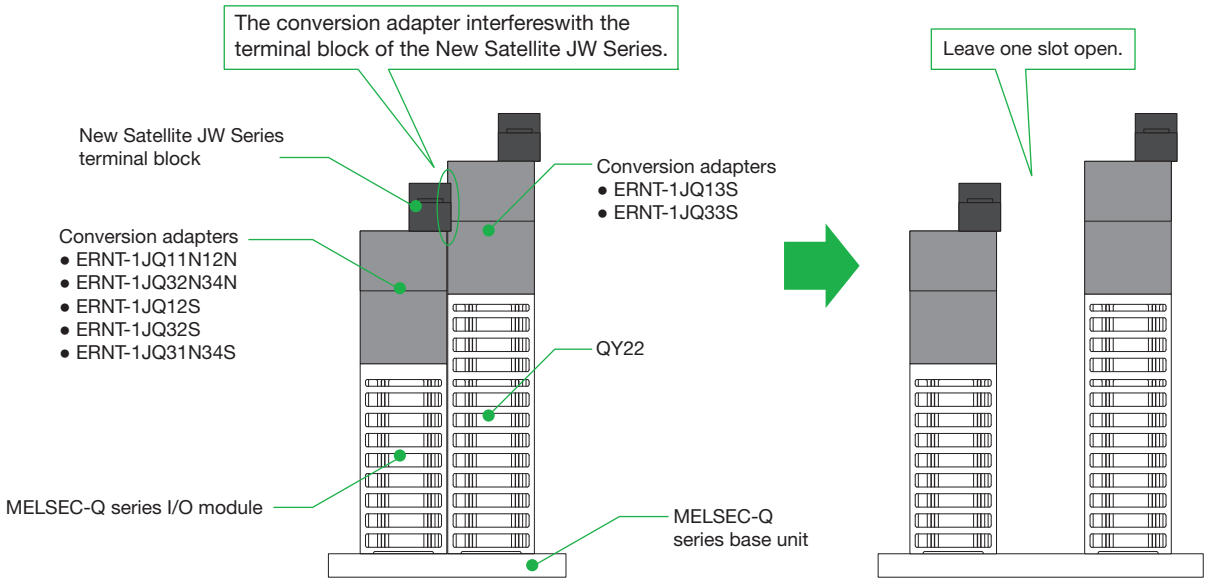

Conversion Adapter Support Flange / Base Adapter

When using a conversion adapter, the conversion adapter support flange is required. We recommend use of a base adapter that permits MELSEC-Q series installation using the mounting holes of the New Satellite JW Series (additional drilling of holes is not required).

External Dimensions

Conversion Adapter

Model names:
ERNT-1JQ11N12N
ERNT-1JQ12S

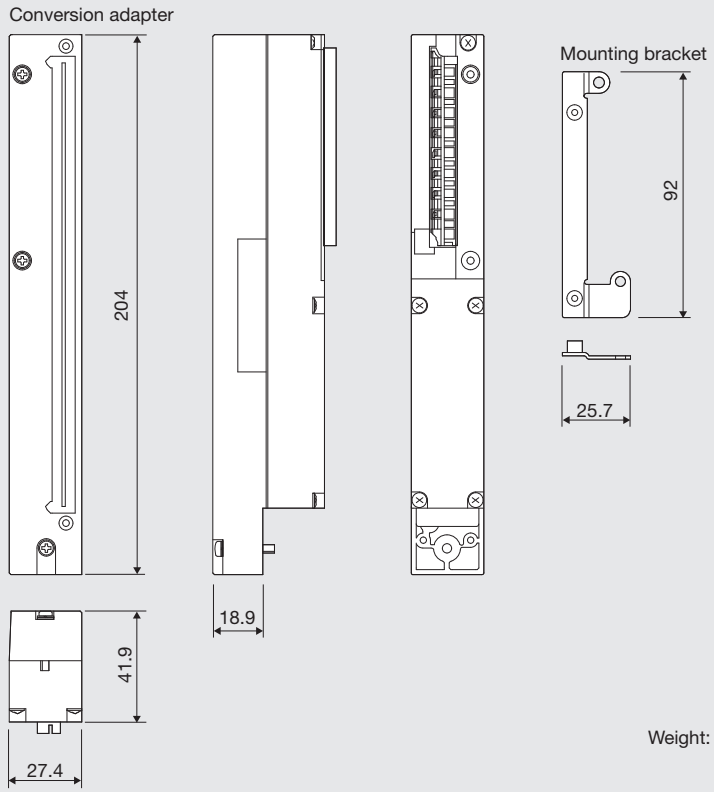

Model name:
ERNT-1JQ13S

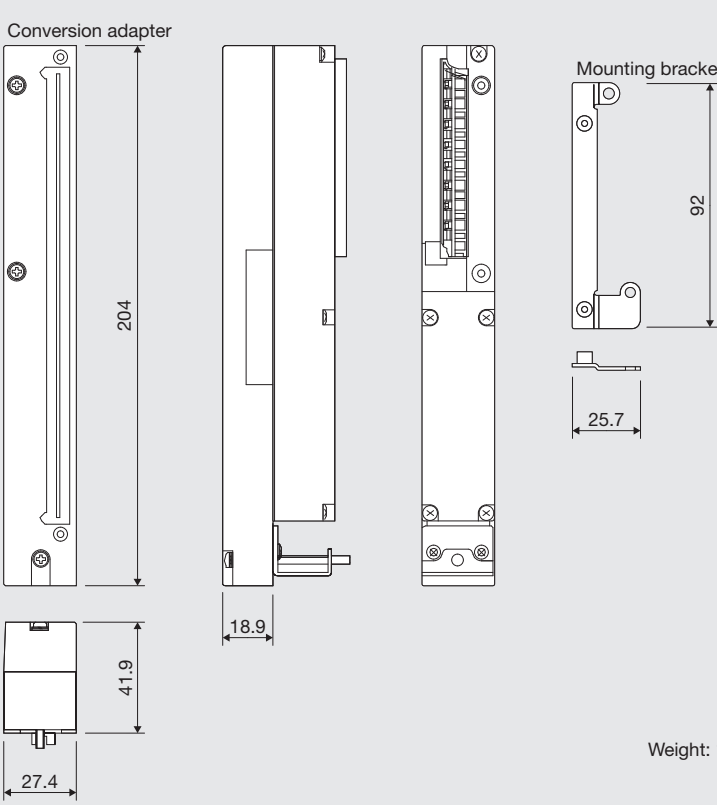

Model names:
ERNT-1JQ32N34N
ERNT-1JQ32S

Unit: mm

Conversion adapter

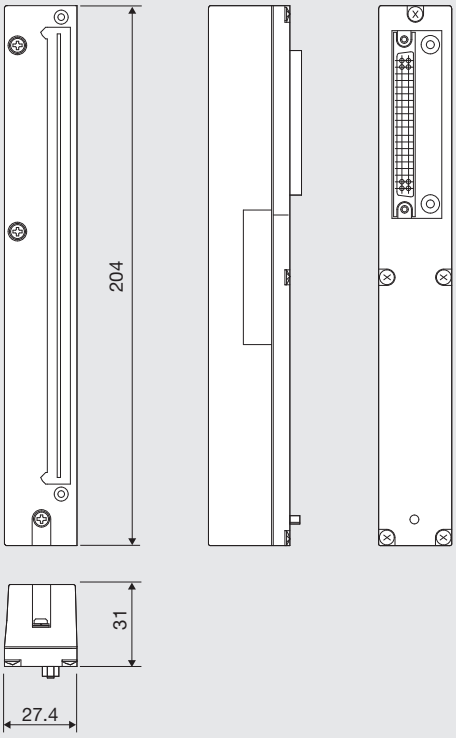

Mounting bracket

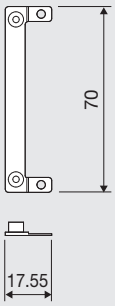

Weight: 125g

Model name:
ERNT-1JQ64NC

Unit: mm

Conversion adapter

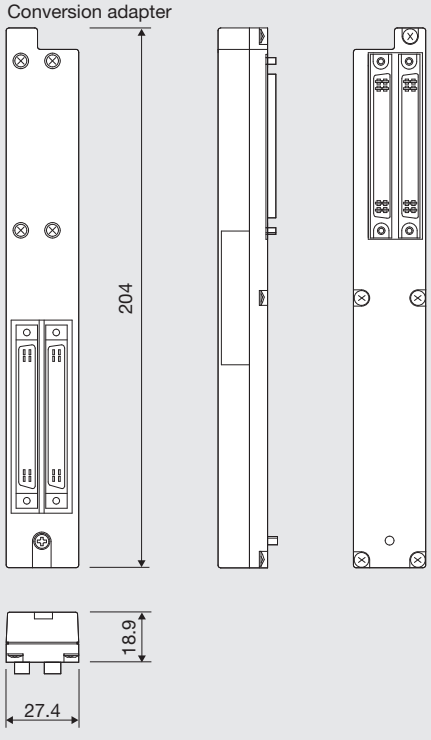

Weight: 105g

Model name:
ERNT-1JQ32SC62SC

Conversion adapter

Unit: mm

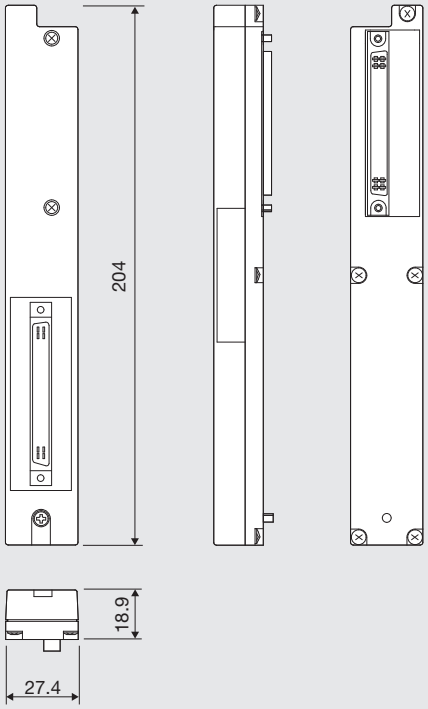

Weight: 85g

Model name:
ERNT-1JQ31N34S

Conversion adapter

Unit: mm

Mounting bracket

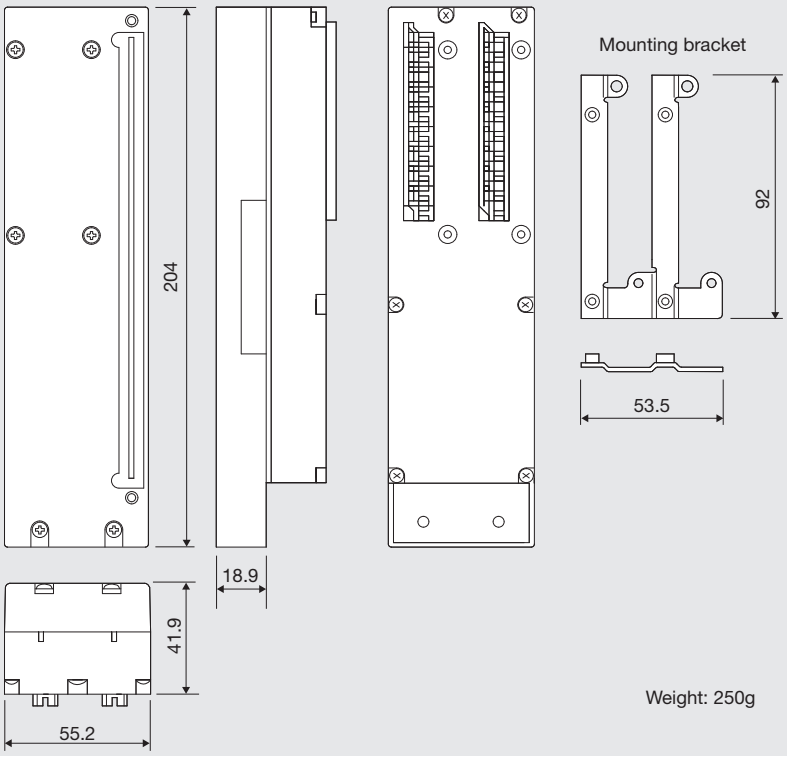

Weight: 250g

Model name:
ERNT-1JQ33S

Unit: mm

Conversion adapter

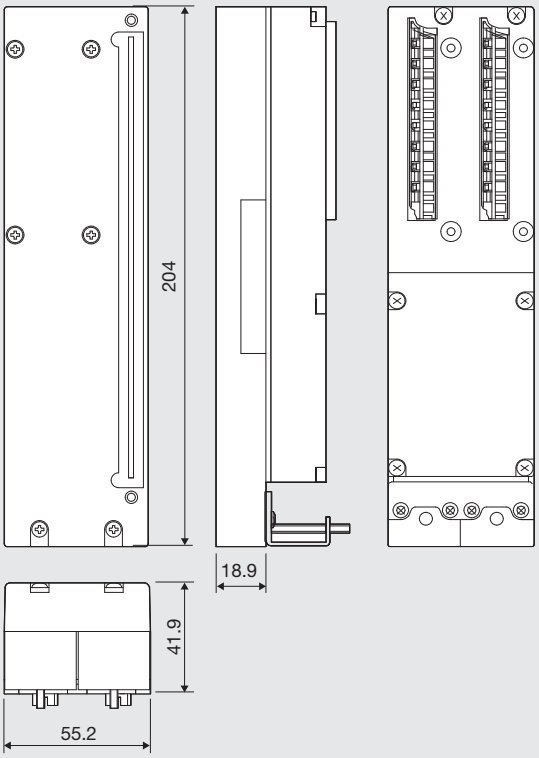

Mounting bracket

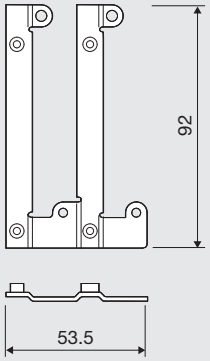

Weight: 280g

JW series small type (JW300/30H/20H)

Upgrading from the New Satellite JW Series to the MELSEC-Q Series

Simplifies replacement with the MELSEC-Q series
The upgrade tool makes it easy to replace the SHARP New Satellite JW Series programmable controller with the Mitsubishi Electric MELSEC-Q series.

Significantly shortens the time required for I/O module wiring and significantly reduces wiring errors
The upgrade tool allows you to connect the wiring connected to the New Satellite JW Series I/O modules as is to the MELSEC-Q series using a conversion adapter. (Partial changes to power supply and common terminal connections required.)

Product Overview

This upgrade tool includes a conversion adapter that is used to transfer the existing wiring of SHARP New Satellite JW Series programmable controller (small types: JW300/30H/20H) input/output modules to the Mitsubishi programmable controller MELSEC-Q series input/output modules.

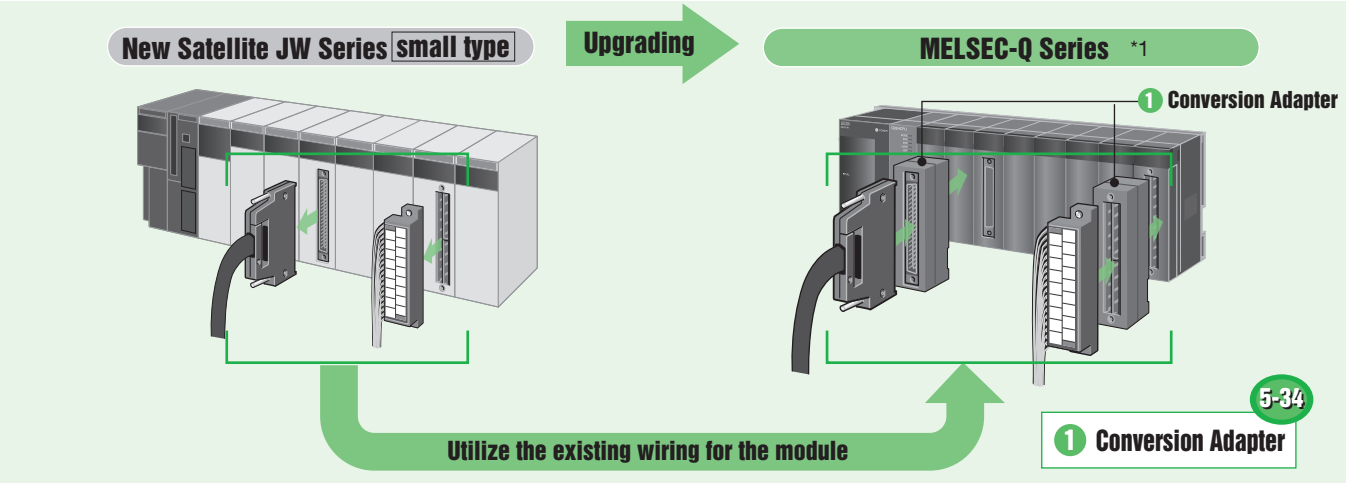

*1: When replacing SHARP New Satellite JW Series programmable controller (small type: JW300/30H/20H) with Mitsubishi programmable controller MELSEC-Q series, verification of the mounting is required due to the change in module width and depth dimensions. The conversion adapter terminal block may cause interference with adjacent modules. For details, refer to "Usage Precautions" on page 5-45 in this catalog.

Mitsubishi Electric AnS-size Q Series Large Type Base Unit (Recommended)

In light of the following circumstances, we recommend that you use the Mitsubishi Electric AnS-size Q series large type base unit (Q□□BLS, Q□□BLS-D).
Note that the pitch of mounting holes in some models are similar to that in the JW series, and therefore mounting positions must be reconsidered.

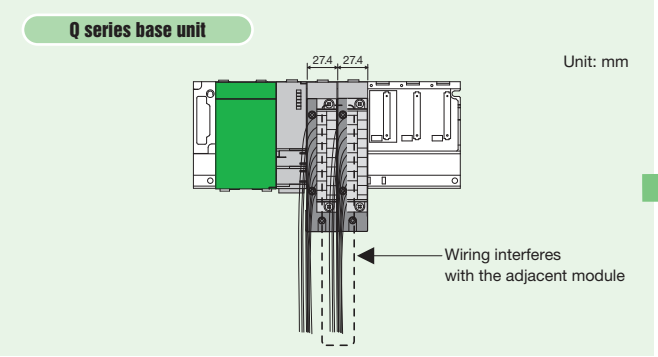

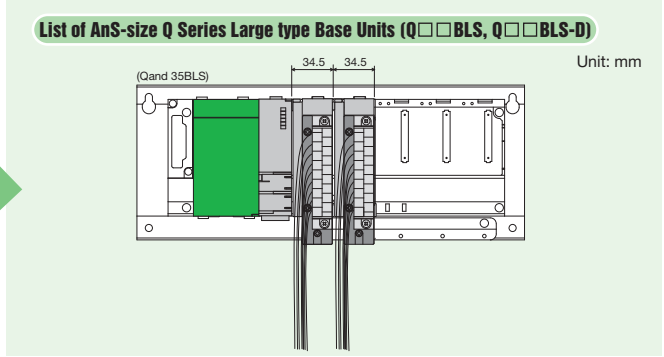

●The AnS-size Q series large type base unit can be used to remove terminal block interference when use of the conversion adapter causes interference with adjacent modules.

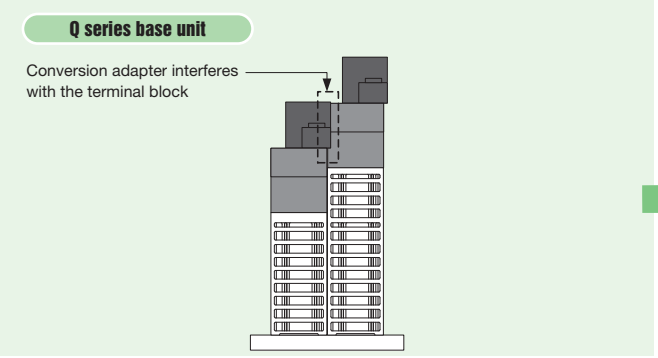

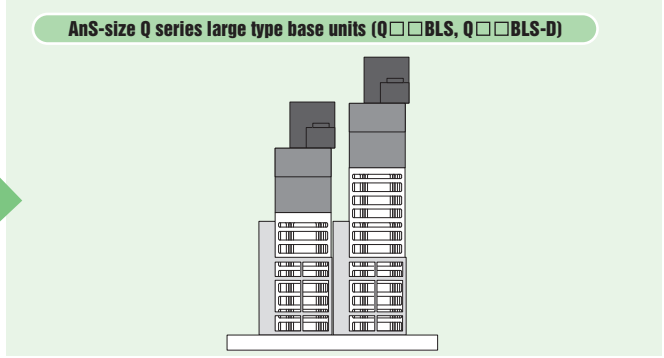

MITSUBISHI ELECTRIC CORPORATION

Upgrading using the AnS-size Q series large type base unit

Using the Mitsubishi Electric AnS-size Q series large type base unit (Q□□BLS, Q□□BLS-D) eliminates the need to secure wiring space and check for interference between adjacent conversion adapter terminal blocks.
Note that the pitch of mounting holes in some models are similar to that in the JW series, and therefore mounting positions must be reconsidered.

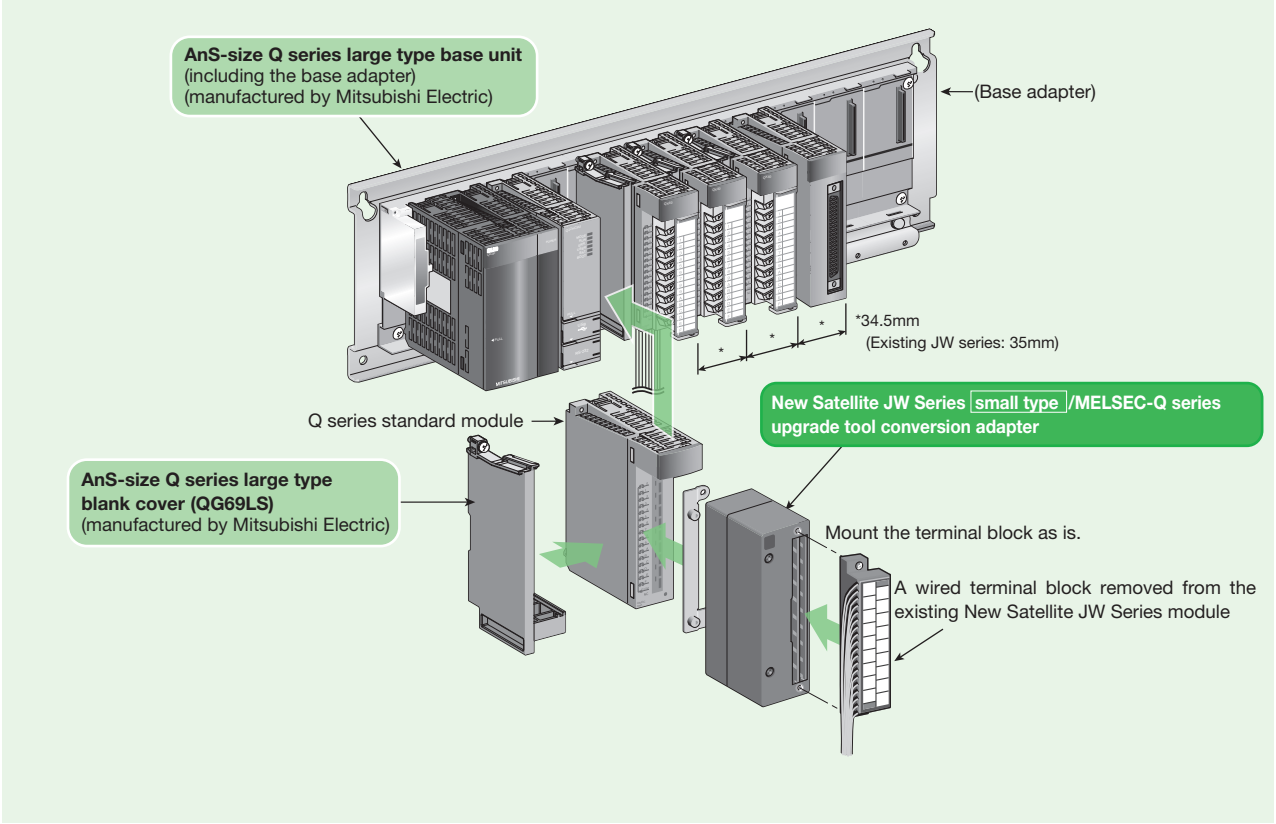

●For details on mounting dimensions, refer to page 5-39 in this catalog.

List of AnS-size Q Series Large type Base Units

Model		Description	Number of slots
Panel surface installation type	DIN rail installation type		
Q38BLS	Q38BLS-D	Main base unit	8
Q35BLS	Q35BLS-D		5
Q68BLS	Q68BLS-D	Extension base unit with power supply	8
Q65BLS	Q65BLS-D		5
Q55BLS	Q55BLS-D	Extension base unit without power supply	5

AnS-size Q series large type blank cover

Model	Description
QG69LS	Used to adjust gaps between modules

Model List

1 Conversion adapter

When selecting a conversion adapter, be sure to refer to the module specification comparison charts and notes on pages 5-34 to 5-38.
These pages describe precautions such as differences in the number of points per common. For detailed specifications and general specifications not described in the module specification comparison charts, refer to the user's manual for the module used. Note that the areas where the specifications differ between the New Satellite JW Series small type and the MELSEC-Q series are restricted in terms of specifications during replacement. Verify the specifications of the connected devices.

For Input/Output Modules

[1-slot type] (Applicable to the Mitsubishi Electric AnS-size Q series large type base unit (Q□□BLS, Q□□BLS-D) as well)

Input/Output	New Satellite JW Series module model before replacement	MELSEC-Q series module model after replacement	Conversion adapter: Model	Conversion adapter: Shape (New Satellite JW Series)	Conversion adapter: Shape (MELSEC-Q series)	No. of input/output points	Page
Input	JW-211N JW-211NA	QX10	ERNT-2JQ210NS	Terminal block (18 points)	Terminal block (18 points)	16 points	5-34
Output	JW-213S JW-213SA	QY22					
	JW-214S JW-214SA	QY10					
Input	JW-212N JW-212NA JW-214N JW-214NA	QX40, QX40-S1, QX70 *3					
		QX80	ERNT-2JQ212S				5-35
Output	JW-212S JW-212SA	QY40P, QY50, QY70 *4					
Input	JW-234N	QX41, QX41-S1, QX41-S2, QX71 *5 *6	ERNT-2JQ234N264N	Connector (40P)	Connector (40P)	32 points	5-36
	JW-264N	QX41 × 2, QX41-S1 × 2, QX41-S2 × 2 *7 *8	ERNT-2JQ234N264N × 2 *1	Connector (40P) x 2	Connector (40P) x 2	32 points x 2	
Output	JW-232S	QY41H	ERNT-2JQ232S262S	Connector (40P)	Connector (40P)	32 points	5-38
	JW-262S	QY41H × 2	ERNT-2JQ232S262S × 2 *2	Connector (40P) x 2	Connector (40P) x 2	32 points x 2	

*1: Two conversion adapters are required to replace the JW-264N. *2: Two conversion adapters are required to replace the JW-262S.
*3: Consider rewiring to the QX40H or QX80H if the existing module uses a different power supply for each 8-point group. Also consider using the ERNT-ASQTB20 in such cases.
*4: Another power supply is required: 12/24VDC for QY40P and QY50, and 5/12VDC for QY70.
*5: Consider rewiring to the QX81 or QX81-S2 if using a 24VDC negative common.
*6: Consider rewiring to two QX40s, two QX40-S1s, two QX70s, or two QX80s if the existing module uses a different power supply for each 16-point group. Also consider using the ERNT-ASQTB20 in such cases.
*7: Cannot be used with negative common input.
*8: Consider rewiring to the QX82 or QX82-S1 if using a 24VDC negative common.

☆ Universal conversion adapter (*Requires rewiring. For details, refer to page 7-1 in this catalog.)

Input/output modules and analog/high-speed counter modules in the table below do not support the use of a conversion adapter. These modules, however, can be replaced by using a universal conversion adapter even though rewiring is required.
Check that the specifications of MELSEC-Q series modules satisfy the specifications of devices and equipment to be connected.

For Input/Output Modules

Input/Output	New Satellite JW Series module model: Model	Specifications	No. of points	MELSEC-Q series module model: Model	Specifications	No. of points	No. of required modules	Universal conversion adapter
Input	JW-203N	200/240VAC	8 points	QX28	100-240VAC	8 points	1 module	*9
	JW-201N	100/120VAC	8 points	QX28	100-240VAC	8 points	1 module	
	JW-202N	12/24VDC	8 points	QX40, QX40-S1	24VDC positive common	16 points	1 module	
				QX70	5/12VDC positive/negative common			
Output	JW-203S	100/200VAC	8 points	QY22	100-240VAC	16 points	1 module	
	JW-204S JW-204SA	250VAC/30VDC 2A independent	8 points	QY18A	240VAC/24VDC 2A independent	8 points	1 module	
	JW-202S	5/12/24VDC sink type	8 points	QY68A	5-24VDC 2A independent sink/source type	8 points	1 module	
	JW-215SA	5/12/24VDC source type	16 points	QY80	12/24VDC source type	16 points	1 module	
Input/output	JW232M	12/24VDC	16 points	QH42P	24VDC positive common	32 points	1 module	No applicable module
		5/12/24VDC sink type	16 points		12/24VDC sink type	32 points		

*9: Use for replacements with the universal conversion adapter (refer to page 7-5).

For Analog/High-Speed Counter Modules

Input/Output	New Satellite JW Series module model: Model	Specifications	Number of channels	MELSEC-Q series module model: Model	Specifications	Number of channels	No. of required modules	Universal conversion adapter
Analog input	JW-24AD	-10 to 10VDC, -20 to 20mADC 13-bit signed binary	4	Q64AD	-10 to 0 to 10VDC, 0 to 20mA DC 16-bit signed binary	4	1 module	*10
Analog output	JW-222DA	-10 to 10VDC, -20 to 20mADC 15-bit signed binary	2	Q62DAN	-10 to 10VDC, 0 to 20mADC 16-bit signed binary	2	1 module	*10
High-speed counter input	JW-21HC	60kpps 32-bit binary	1	QD62	200/100/10kpps 32-bit binary	2	1 module	*10
	JW-22HC	240kpps 32-bit binary	2	QD62	200/100/10kpps 32-bit binary	2	1 module	

*10: The universal conversion adapter (refer to page 7-5) can be used for replacement.

Conversion Adapter

Specifications

For Input/Output Modules

1-slot type (Applicable to AnS-size Q series large type base units(Q □□ BLS, Q □□ BLS-D) as well)

(1) ERNT-2JQ210NS Terminal block (18p)→Terminal block (18p)

Conversion adapter model	New Satellite JW Series module model	No. of input/output points	MELSEC-Q series module model
ERNT-2JQ210NS	JW-211N/JW-211NA	16 points	QX10
	JW-212N/JW-212NA	16 points	QX40 QX40-S1 QX70
	JW-214N/JW-214NA	16 points	
	JW-213S/JW-213SA	16 points	QY22
	JW-214S/JW-214SA	16 points	QY10

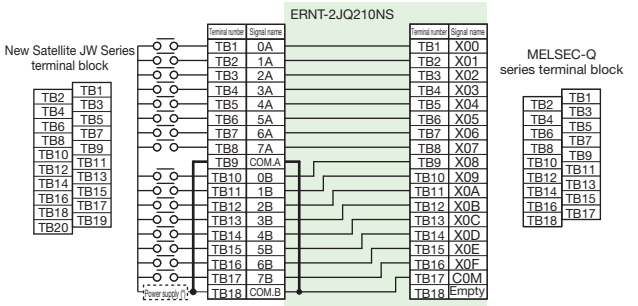

[Specification comparison chart]

Specifications \ Model		New Satellite JW Series JW-211N/JW-211NA	MELSEC-Q series QX10
No. of input points		16 points	16 points
Rated input voltage		100-120VAC 50/60Hz	100-120VAC 50/60Hz
Rated input current		Approx. 10mA (100VAC 60Hz) Approx. 8.4mA (100VAC 50Hz)	Approx. 8mA (100VAC 60Hz) Approx. 7mA (100VAC 50Hz)
Input impedance		Approx. 10kΩ (60Hz) Approx. 12kΩ (50Hz)	Approx. 12kΩ (60Hz) Approx. 15kΩ (50Hz)
Inrush current		Max. 480mA 0.2ms (132VAC)	Max. 200mA 1ms (132VAC)
Operating voltage/ current	ON	80VAC / 7mA	80VAC / 5mA
	OFF	30VAC / 3mA	30VAC / 1.7mA
Response time	OFF→ON	30ms or less	15ms or less
	ON→OFF	40ms or less	20ms or less
Isolation method		Photocoupler isolation	Photocoupler isolation
Wiring method for common		8 points per common	16 points per common
External interface		18-point terminal block	18-point terminal block

Specifications \ Model		New Satellite JW Series JW-212N/JW-212NA Positive common/negative common shared type	New Satellite JW Series JW-214N/JW-214NA Positive common/negative common shared type	MELSEC-Q series QX40 Positive common type	MELSEC-Q series QX40-S1 Positive common type	MELSEC-Q series QX70 Positive common/negative common shared type
No. of input points		16 points	16 points	16 points	16 points	16 points
Rated input voltage		12/24VDC	12/24VDC	24VDC	24VDC	5/12VDC
Rated input current		Approx. 7.5mA (24VDC) Approx. 3.5mA (12VDC)	Approx. 7.5mA (24VDC) Approx. 3.5mA (12VDC)	Approx. 4mA	Approx. 6mA	Approx. 3.3mA (12VDC) Approx. 1.2mA (5VDC)
Input impedance		Approx. 3.3kΩ	Approx. 3.3kΩ	Approx. 5.6kΩ	Approx. 3.9kΩ	Approx. 3.3kΩ
Inrush current		–	–	–	–	–
Operating voltage/ current	ON	10.5V / 3mA	10.5V / 3mA	19V / 3mA	19V / 4mA	3.5V / 1mA
	OFF	5V / 1.5mA	5V / 1.5mA	11V / 1.7mA	11V / 1.7mA	1V / 0.1mA
Response time	OFF→ON	10ms or less	0.5ms or less	1/5/10/20/70ms or less	0.1/0.2/0.4/0.6/1ms or less	1/5/10/20/70ms or less
	ON→OFF	10ms or less	1.5ms or less	1/5/10/20/70ms or less	0.1/0.2/0.4/0.6/1ms or less	1/5/10/20/70ms or less
Isolation method		Photocoupler isolation	Photocoupler isolation	Photocoupler isolation	Photocoupler isolation	Photocoupler isolation
Wiring method for common		8 points per common	8 points per common	16 points per common	16 points per common	16 points per common
External interface		18-point terminal block	18-point terminal block	18-point terminal block	18-point terminal block	18-point terminal block

Specifications \ Model		New Satellite JW Series JW-213S Triac output	New Satellite JW Series JW-213SA Triac output	MELSEC-Q series QY22 Triac output
No. of output points		16 points	16 points	16 points
Rated load voltage		100-240VAC 50/60Hz	100-240VAC 50/60Hz	100-240VAC 50/60Hz
Maximum load current		0.5A/point 2A/common	1A/point 2A/common	0.6A/point 4.8A/common
Minimum load current		15mA	15mA	25mA
Maximum inrush current		6A 100ms or less	6A 100ms or less	20A, one cycle or less
Leakage current at OFF		1.5mA or less (120VAC) 3mA or less (240VAC)	1.5mA or less (120VAC) 3mA or less (240VAC)	1.5mA or less (120VAC 60Hz) 3mA or less (240VAC 60Hz)
Voltage drop at ON		1.6V or less (0.3A)	1.6V or less (0.3A)	1.5V or less
Response time	OFF→ON	1ms or less	1ms or less	1ms + 0.5 cycle or less
	ON→OFF	1ms + 0.5 cycle or less	1ms + 0.5 cycle or less	1ms + 0.5 cycle or less
Surge suppressor		Capacitive varistor	Capacitive varistor	CR absorber
Fuse		3A (not replaceable)	3.15A (not replaceable)	None
Isolation method		Photocoupler isolation	Photocoupler isolation	Photocoupler isolation
Wiring method for common		8 points per common	8 points per common	16 points per common
External interface		18-point terminal block	18-point terminal block	18-point terminal block

Specifications \ Model		New Satellite JW Series JW-214S/JW-214SA	MELSEC-Q series QY10
No. of output points		16 points	16 points
Rated load voltage		30VDC / 250VAC	24VDC / 240VAC
Maximum load current		2A/point 5A/common	2A/point 8A/common
Minimum load current		10mA (5VDC)	1mA (5VDC)
Maximum inrush current		–	–
Leakage current at OFF		–	–
Voltage drop at ON		–	–
Response time	OFF→ON	10ms or less	10ms or less
	ON→OFF	10ms or less	12ms or less
Surge suppressor		None	None
Fuse		None	None
Isolation method		Relay isolation	Relay isolation
Wiring method for common		8 points per common	16 points per common
External interface		18-point terminal block	18-point terminal block

Notes 1. In a case where the number of points per common changes from 8 (two circuits) to 16 and the terminal numbers TB9 and TB18 on the New Satellite JW Series side are used separately, a wiring change is required.
2. For ▭ areas, check that the specifications of MELSEC-Q series modules satisfy the specifications of devices and equipment to be connected.
3. For detailed specifications and general specifications not described in the specification comparison charts, refer to the user's manual for the module used. Note that the areas where the specifications differ between the New Satellite JW Series and the MELSEC-Q series are restricted in terms of specifications during replacement. Verify the specifications of the connected devices.
4. Consider rewiring to the QX40H or QX80H if the existing module uses a different power supply for each 8-point group. Also consider using the ERNT-ASQTB20 in such cases.

(2) ERNT-2JQ212S Terminal block (18P)→Terminal block (18P)

Conversion adapter model	New Satellite JW Series module model	No. of input/ output points	MELSEC-Q series module model
ERNT-2JQ212S	JW-212S/JW-212SA	16 points	QY40P QY50 QY70
	JW-212N/JW-212NA	16 points	QX80
	JW-214N/JW-214NA	16 points	

JW-212S/JW-212SA→QY40P/QY50/QY70

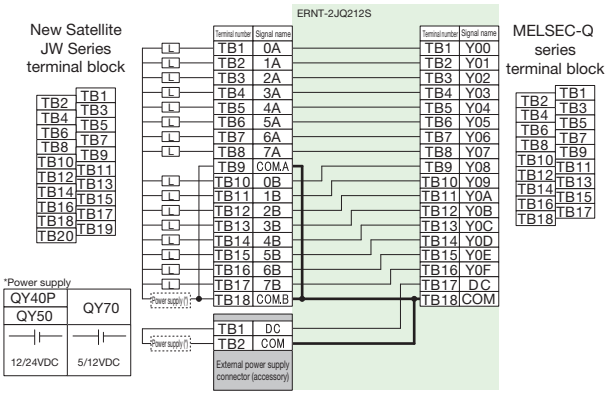

[Specification comparison chart]

Specifications \ Model		New Satellite JW Series		MELSEC-Q series		
		JW-212S Sink type	JW-212SA Sink type	QY40P Sink type	QY50 Sink type	QY70 Sink type
No. of output points		16 points	16 points	16 points	16 points	16 points
Rated load voltage		5/12/24VDC	5/12/24VDC	12/24VDC	12/24VDC	5/12VDC
Maximum load current		0.5A/point 2A/common	0.5A/point 2A/common	0.1A/point 1.6A/common	0.5A/point 4A/common	16mA/point 256mA/common
Maximum inrush current		1A, 100ms	1A, 100ms	0.7A, 10ms	4A, 10ms	40mA, 10ms
Leakage current at OFF		0.2mA or less	0.2mA or less	0.1mA or less	0.1mA or less	–
Voltage drop at ON		1.2VDC (MAX.) 0.3A	1.2VDC (MAX.) 0.3A	0.2VDC (MAX.) 0.1A	0.3VDC (MAX.) 0.5A	VOL: DC0.3V
Response time	OFF→ON	1ms or less	1ms or less	1ms or less	1ms or less	0.5ms or less
	ON→OFF	1ms or less (resistive load)	1ms or less (resistive load)	1ms or less (resistive load)	1ms or less (resistive load)	0.5ms or less (resistive load)
Surge suppressor		Zener diode	Zener diode	Zener diode	Zener diode	None
Fuse		3A (not replaceable)	3.15A (not replaceable)	None	6.7A (not replaceable)	1.6A (not replaceable)
Isolation method		Photocoupler isolation	Photocoupler isolation	Photocoupler isolation	Photocoupler isolation	Photocoupler isolation
Wiring method for common		8 points per common	8 points per common	16 points per common	16 points per common	16 points per common
External interface		18-point terminal block	18-point terminal block	18-point terminal block	18-point terminal block	18-point terminal block

Notes 1. In a case where the number of points per common changes from 8 (four circuits) to 16 and the terminal numbers TB9 and TB18 on the New Satellite JW Series side are used separately, a wiring change is required.
2. Additional 5/12/24VDC supply to the terminal numbers TB1 and TB2 of the external power supply connector is required.
3. For ▭ areas, check that the specifications of MELSEC-Q series modules satisfy the specifications of devices and equipment to be connected.
4. For detailed specifications and general specifications not described in the specification comparison charts, refer to the user's manual for the module used. Note that the areas where the specifications differ between the New Satellite JW Series and the MELSEC-Q series are restricted in terms of specifications during replacement. Verify the specifications of the connected devices.

JW-212N/JW-212NA/JW-214N/JW-214NA→QX80

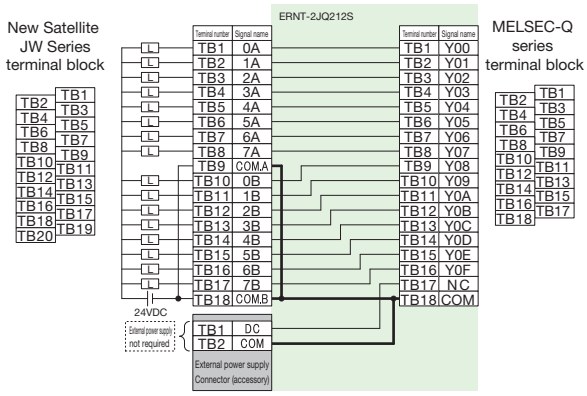

[Specification comparison chart]

Specifications \ Model		New Satellite JW Series		MELSEC-Q series
		JW-212N/JW-212NA Positive common/negative common shared type	JW-214N/JW-214NA Positive common/negative common shared type	QX80 negative common type
No. of input points		16 points	16 points	16 points
Rated input voltage		12/24VDC	12/24VDC	24VDC
Rated input current		Approx. 7.5mA (24VDC) Approx. 3.5mA (12VDC)	Approx. 7.5mA (24VDC) Approx. 3.5mA (12VDC)	Approx. 4mA
Input impedance		Approx. 3.3kΩ	Approx. 3.3kΩ	Approx. 5.6kΩ
Inrush current		–	–	–
Operating voltage/ current	ON	10.5V / 3mA	10.5V / 3mA	19V / 3mA
	OFF	5V / 1.5mA	5V / 1.5mA	11V / 1.7mA
Response time	OFF→ON	10ms or less	0.5ms or less	1/5/10/20/70ms or less
	ON→OFF	10ms or less	1.5ms or less	1/5/10/20/70ms or less
Isolation method		Photocoupler isolation	Photocoupler isolation	Photocoupler isolation
Wiring method for common		8 points/common	8 points/common	16 points/common
External interface		18-point terminal block	18-point terminal block	18-point terminal block

Notes 1. In a case where the number of points per common changes from 8 (two circuits) to 16 and the terminal numbers TB9 and TB18 on the New Satellite JW Series side are used separately, a wiring change is required.
2. The external power supply connected to terminal numbers TB1 and TB2 in the external power supply connector is no longer required.
3. For ▭ areas, check that the specifications of MELSEC-Q series modules satisfy the specifications of devices and equipment to be connected.
4. For detailed specifications and general specifications not described in the specification comparison charts, refer to the user's manual for the module used. Note that the areas where the specifications differ between the New Satellite JW Series and the MELSEC-Q series are restricted in terms of specifications during replacement. Verify the specifications of the connected devices.

(3) ERNT-2JQ234N264N Connector (40P)→Connector (40P)

Conversion adapter model	New Satellite JW Series module model	No. of input points	MELSEC-Q series module model
ERNT-2JQ234N264N	JW-234N	32 points	QX41 QX41-S1 QX41-S2 QX71
ERNT-2JQ234N264N × 2	JW-264N *1	64 points	QX41 × 2 modules QX41-S1 × 2 modules QX41-S2 × 2 modules

*1: Two sets of the MELSEC-Q series module and conversion adapter are required (32 points for each set) to replace the JW-264N.

JW-234N→QX41/QX41-S1/QX41-S2/QX71

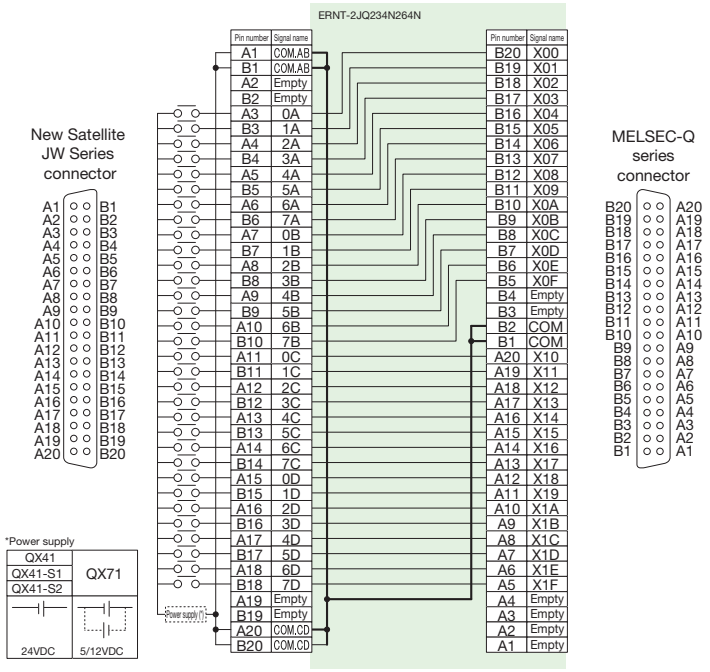

[Specification comparison chart]

Specifications \ Model		New Satellite JW Series	MELSEC-Q series			
		JW-234N Positive common/negative common shared type	QX41 Positive common type	QX41-S1 Positive common type	QX41-S2 Positive common type	QX71 Positive common/negative common shared type
No. of input points		32 points	32 points	32 points	32 points	32 points
Rated input voltage		12/24VDC	24VDC	24VDC	24VDC	5/12VDC
Rated input current		Approx. 7mA (24VDC) Approx. 3.5mA (12VDC)	Approx. 4mA	Approx. 4mA	Approx. 6mA	Approx. 3.3mA (12VDC) Approx. 1.2mA (5VDC)
Input impedance		Approx. 3.5kΩ	Approx. 5.6kΩ	Approx. 5.6kΩ	Approx. 3.6kΩ	Approx. 3.3kΩ
Inrush current		–	–	–	–	–
Operating voltage/ current	ON	10.5V / 3mA	19V / 3mA	19V / 3mA	15V / 3mA	3.5V / 1mA
	OFF	5V / 1.5mA	11V / 1.7mA	9.5V / 1.5mA	5V / 1.7mA	1V / 0.1mA
Response time	OFF→ON	0.5ms or less	1/5/10/20/70ms or less	0.1/0.2/0.4/0.6/1ms or less	1/5/10/20/70ms or less	1/5/10/20/70ms or less
	ON→OFF	1.5ms or less	1/5/10/20/70ms or less	0.1/0.2/0.4/0.6/1ms or less	1/5/10/20/70ms or less	1/5/10/20/70ms or less
Isolation method		Photocoupler isolation	Photocoupler isolation	Photocoupler isolation	Photocoupler isolation	Photocoupler isolation
Wiring method for common		16-points per common	32-points per common	32-points per common	32-points per common	32-points per common
External interface		40-pin connector	40-pin connector	40-pin connector	40-pin connector	40-pin connector

Notes 1. In a case where the number of points per common changes from 16 (two circuits) to 32 and the pin numbers A1/B1 and A20/B20 on the New Satellite JW Series side are used separately, a wiring change is required.
2. For ▭ areas, check that the specifications of MELSEC-Q series modules satisfy the specifications of devices and equipment to be connected.
3. For detailed specifications and general specifications not described in the specification comparison charts, refer to the user's manual for the module used. Note that the areas where the specifications differ between the New Satellite JW Series and the MELSEC-Q series are restricted in terms of specifications during replacement. Verify the specifications of the connected devices.
4. Consider rewiring to the QX81 or QX81-S2 if the existing module uses the 24VDC negative common.
5. Consider rewiring to two QX40s, two QX40-S1s, two QX70s, or two QX80s if the existing module uses a different power supply for each 16-point group. Also consider using the ERNT-ASQTB20 in such cases.

JW-264N→QX41/QX41-S1/QX41-S2 × 2

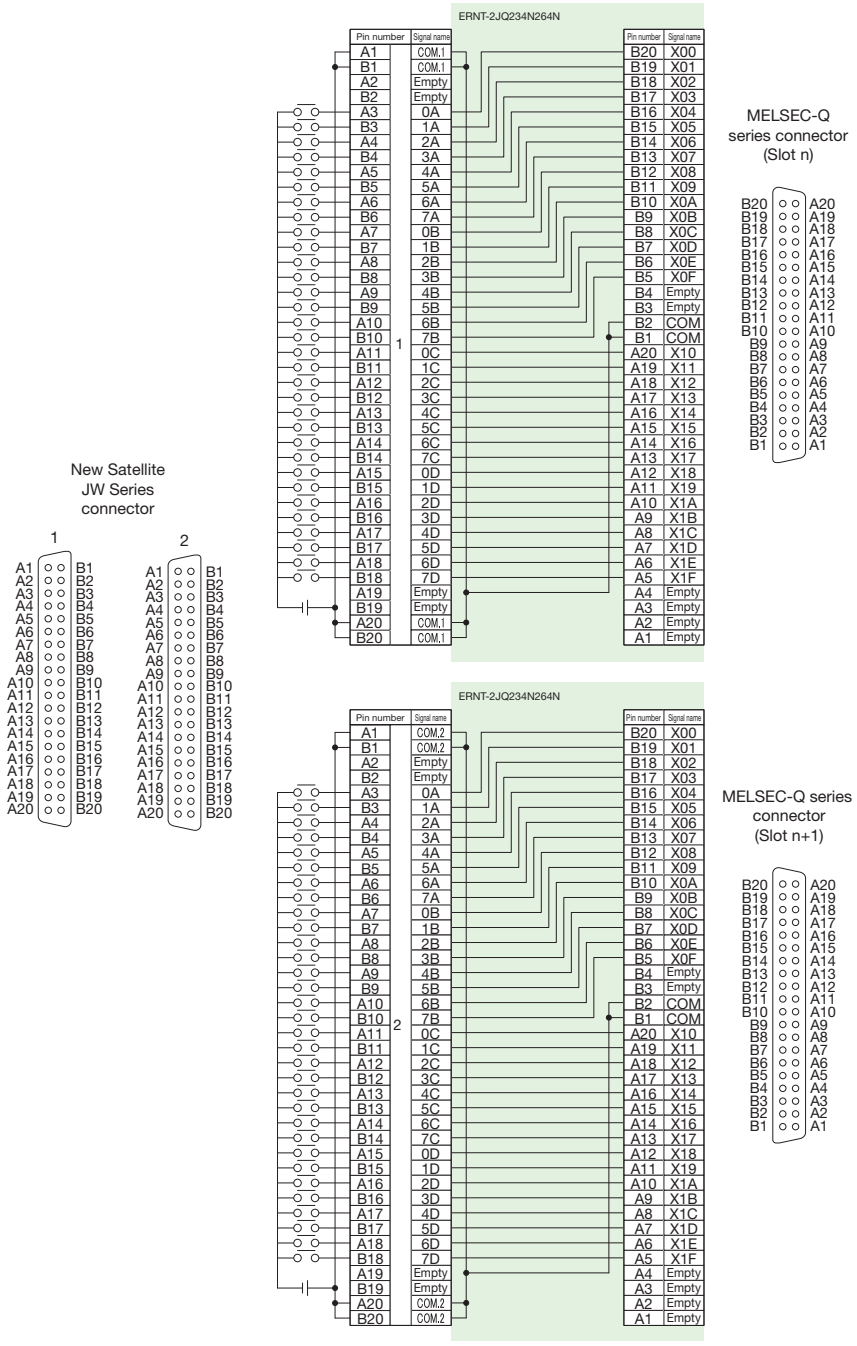

[Specification comparison chart]

Specifications \ Model		New Satellite JW Series	MELSEC-Q series		
		JW-264N Positive common/negative common shared type	QX41 Positive common type	QX41-S1 Positive common type	QX41-S2 Positive common type
No. of input points		64 points	32 points	32 points	32 points
Rated input voltage		24VDC	24VDC	24VDC	24VDC
Rated input current		Approx. 4.1mA	Approx. 4mA	Approx. 4mA	Approx. 6mA
Input impedance		Approx. 5.9kΩ	Approx. 5.6kΩ	Approx. 5.6kΩ	Approx. 3.6kΩ
Inrush current		—	—	—	—
Operating voltage/ current	ON	18V / 3mA	19V / 3mA	19V / 3mA	15V / 3mA
	OFF	8V / 1.5mA	11V / 1.7mA	9.5V / 1.5mA	5V / 1.7mA
Response time	OFF→ON	0.5ms or less	1/5/10/20 /70ms or less	0.1/0.2/0.4/0.6 /1ms or less	1/5/10/20 /70ms or less
	ON→OFF	1.5ms or less	1/5/10/20 /70ms or less	0.1/0.2/0.4/0.6 /1ms or less	1/5/10/20 /70ms or less
Isolation method		Photocoupler isolation	Photocoupler isolation	Photocoupler isolation	Photocoupler isolation
Wiring method for common		32 points per common	32 points per common	32 points per common	32 points per common
External interface		40-pin connector × 2	40-pin connector	40-pin connector	40-pin connector

Notes 1. Two sets of the MELSEC-Q series module and conversion adapter are required (32 points for each set) to replace the JW-264N.
2. Use with the positive common input. (Cannot be used with the negative common input.)
3. For ▭ areas, check that the specifications of MELSEC-Q series modules satisfy the specifications of devices and equipment to be connected.
4. For detailed specifications and general specifications not described in the specification comparison charts, refer to the user's manual for the module used. Note that the areas where the specifications differ between the New Satellite JW Series and the MELSEC-Q series are restricted in terms of specifications during replacement. Verify the specifications of the connected devices.
5. Consider rewiring to the QX82 or QX82-S1 if the existing module uses the 24VDC negative common.

(4) ERNT-2JQ232S262S connector (40P)→Connector (40P)

Conversion adapter model	New Satellite JW Series module model	No. of output points	MELSEC-Q series module model
ERNT-2JQ232S262S	JW-232S	32 points	QY41H
ERNT-2JQ232S262S × 2	JW-262S *1	64 points	QY41H × 2 modules

*1: Two sets of the QY41H and the conversion adapter are required (32 points for each set) to replace the JW-262S.

JW-232S→QY41H

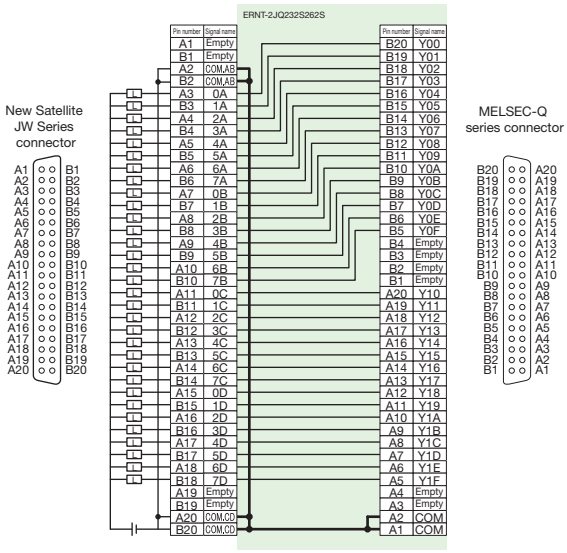

JW-262S→QY41H × 2

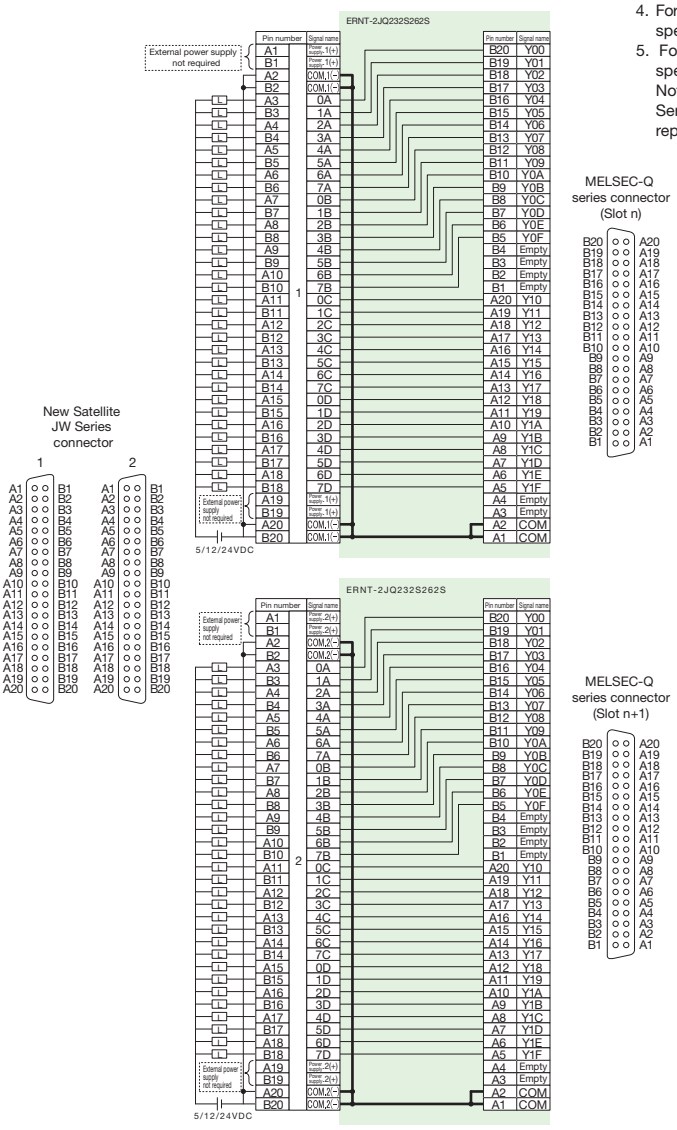

[Specification comparison chart]

Specifications \ Model		New Satellite JW Series JW-232S Sink type	New Satellite JW Series JW-262S Sink type	MELSEC-Q series QY41H Sink type
No. of output points		32 points	64 points	32 points
Rated load voltage		5/12/24VDC	5/12/24VDC	5/12/24VDC
Maximum load current		0.1A/point 1.6A/common	0.1A/point 2A/common	0.2A/point 2A/common
Maximum inrush current		0.15A 10ms or less	0.15A 100ms or less	0.7A 10ms or less
Leakage current at OFF		0.2mA or less	0.2mA or less	0.1mA or less
Voltage drop at ON		1.3VDC (MAX.) 0.1A	1.2VDC (MAX.) 0.1A	0.2VDC (MAX.) 0.1A
Response time	OFF→ON	1ms or less	0.5ms or less	2μs or less
	ON→OFF	1ms or less (resistive load)	1ms or less (resistive load)	2μs or less (resistive load)
Surge suppressor		Zener diode	Zener diode	Zener diode
Fuse		2A (not replaceable)	2.5A (not replaceable)	None
Isolation method		Photocoupler isolation	Photocoupler isolation	Photocoupler isolation
Wiring method for common		16 points per common	32 points per common	32 points per common
External interface		40-pin connector	40-pin connector × 2	40-pin connector

Notes 1. In a case where the number of points per common changes from 16 (two circuits) to 32 and the pin numbers A2/B2 and A20/B20 on the JW-232S side are used separately, a wiring change is required.

2. Two sets of the QY41H and the conversion adapter are required (32 points for each set) to replace the JW-262S.
3. The external power supplies connected to pin numbers A1 and B1 of 1 and pin numbers A1 and B1 of 2 in the New Satellite JW Series module are no longer required for JW-262S replacements. Such devices may remain connected though as the conversion adapter is not wired internally for this connection.
4. For ▭ areas, check that the specifications of MELSEC-Q series modules satisfy the specifications of devices and equipment to be connected.
5. For detailed specifications and general specifications not described in the specification comparison charts, refer to the user's manual for the module used. Note that the areas where the specifications differ between the New Satellite JW Series and the MELSEC-Q series are restricted in terms of specifications during replacement. Verify the specifications of the connected devices.

MITSUBISHI ELECTRIC CORPORATION Base Unit

Note

The positions of the 4 mounting holes needed for the base unit are different from those for the New Satellite JW Series base unit, and therefore you will need to drill additional screw holes into the control panel.

Mounting Dimensions

- The slot positions of modules differ between the New Satellite JW Series and the MELSEC-Q series. After replacement, adjust the length of cables.

Unit: mm

● AnS-size Q series large type base unit Panel surface installation type

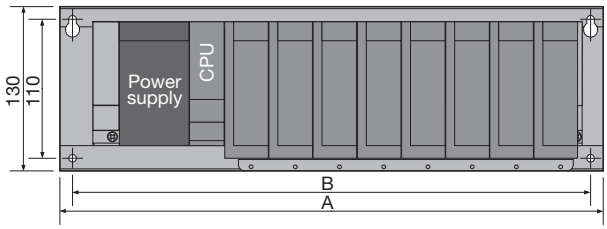

AnS-size Q series large type base unit model	Description	A	B	Mounting screw hole size
Q38BLS	Main base unit	430	410	M5
Q35BLS		325	305	
Q68BLS	Extension base unit with power supply	420	400	
Q65BLS		315	295	
Q55BLS	Extension base unit without power supply	260	240	

● AnS-size Q series large type base unit DIN rail installation type

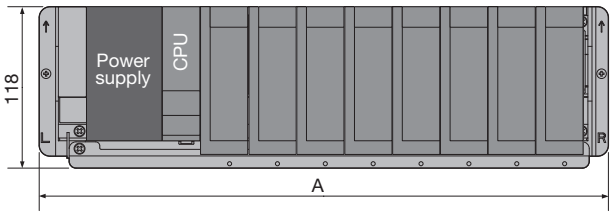

AnS-size Q series large type base unit model	Description	A
Q38BLS-D	Main base unit	416
Q35BLS-D		311
Q68BLS-D	Extension base unit with power supply	409
Q65BLS-D		304
Q55BLS-D	Extension base unit without power supply	248

● MELSEC-Q series base unit

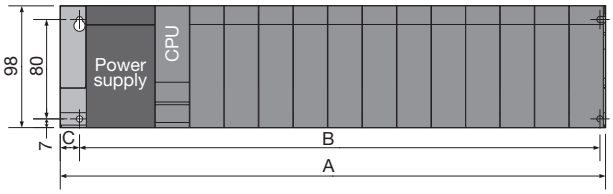

MELSEC-Q series base unit model	Description	A	B	C	Mounting screw hole size
Q312B	Main base unit	439	419	15.5	M4
Q38B		328	308	15.5	
Q35B		245	224.4	15.5	
Q33B		189	169	15.5	
Q612B	Extension base unit with power supply	439	417	15.5	
Q68B		328	306	15.5	
Q65B		245	222.4	15.5	
Q63B		189	167	15.5	
Q55B	Extension base unit without power supply	189	167	15.5	
Q52B		106	83.5	15.5	

● (Reference) New Satellite JW Series base unit

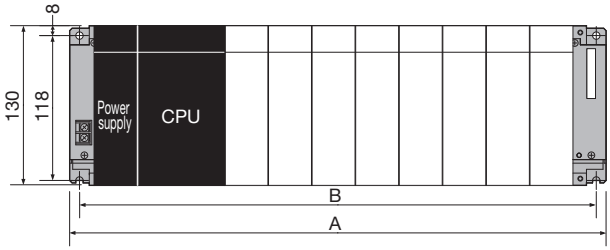

New Satellite JW Series base unit model	Description	A	B	Mounting screw hole size
JW-28KB, JW-38KB	JW20H/30H series main base unit	437	421	M5
JW-26KB, JW-36KB		368	352	
JW-24KB, JW-34KB		297	281	
JW-318KB	JW300 series main base unit	403.5	387.5	
JW-316KB		332.5	316.5	
JW-314KB		261.5	245.5	
JW-38ZB	Extension base unit with power supply	368	352	
JW-36ZB		297	281	
JW-34ZB		226	210	

Comparison of External Dimensions and Mounting Hole Dimensions for Replacements

Use the following tables to check the differences of external dimensions and mounting hole dimensions before and after replacement.

Note

"▲" indicates that the dimensions will be larger after replacement as shown in the example below. Reconsider the installation position. If there are not enough mounting slots, use an extension base unit.

Example) Replacing the New Satellite JW Series (JW-26KB, JW-36KB) with the AnS-size Q series large type base unit (Q38BLS)

JW-26KB, JW-36KB

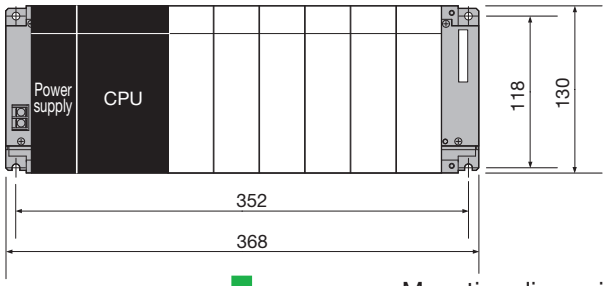

Q38BLS

Unit: mm

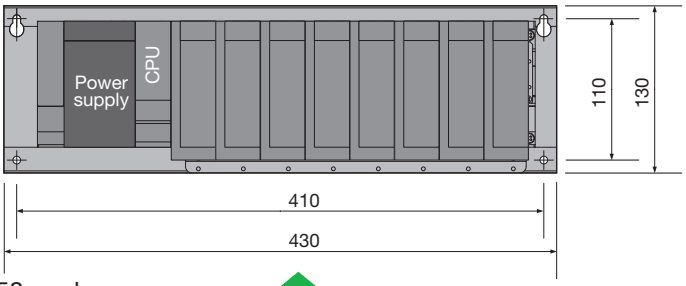

Mounting dimensions: 58mm larger

External dimensions: 62mm larger

Replacing with AnS-size Q series large type base unit or MELSEC Q series base unit

1. When using a main base unit

◎: Same, ○: JW series is larger, ▲: JW series is smaller

JW series base unit			AnS-size Q series large type base unit							MELSEC-Q series base unit							Remarks
Model	Includes power supply	Maximum number of slots	Model	Includes power supply	Maximum number of slots	Comparison*1 (AnS-size Q series large type JW series) External dimensions Width	Height	Mounting Dimensions *2 Width	Height	Model	Includes power supply	Maximum number of slots	Comparison*1 (MELSEC-Q series - JW series) External dimensions Width	Height	Mounting Dimensions *2 Width	Height	
JW-28KB/ JW-38KB	Yes	8	Q38BLS	Yes	8	○ (-7)	◎	○ (-11)	○ (-8)	Q312B	Yes	12	▲ (2)	○ (-32)	○ (-2)	○ (-38)	·You may need to reconsider the panel positions depending on the external dimensions and mounting hole pitches.
										Q38B	Yes	8	○ (-109)	○ (-32)	○ (-113)	○ (-38)	
JW-26KB/ JW-36KB	Yes	6	Q38BLS	Yes	8	▲ (62)	◎	▲ (58)	○ (-8)	Q312B	Yes	12	▲ (71)	○ (-32)	▲ (67)	○ (-38)	·You may need to reconsider the panel positions depending on the external dimensions and mounting hole pitches.
										Q38B	Yes	8	○ (-40)	○ (-32)	○ (-44)	○ (-38)	
			Q35BLS	Yes	5	○ (-43)	◎	○ (-47)	○ (-8)	Q35B	Yes	5	○ (-123)	○ (-32)	○ (-127.6)	○ (-38)	
JW-24KB/ JW-34KB	Yes	4	Q35BLS	Yes	5	▲ (28)	◎	▲ (24)	○ (-8)	Q38B	Yes	8	▲ (31)	○ (-32)	▲ (27)	○ (-38)	·You may need to reconsider the panel positions depending on the external dimensions and mounting hole pitches.
										Q35B	Yes	5	○ (-52)	○ (-32)	○ (-56.6)	○ (-38)	
										Q33B	Yes	3	○ (-108)	○ (-32)	○ (-112)	○ (-38)	
JW-318KB	Yes	8	Q38BLS	Yes	8	▲ (26.5)	◎	▲ (22.5)	○ (-8)	Q312B	Yes	12	▲ (35.5)	○ (-32)	▲ (31.5)	○ (-38)	·You may need to reconsider the panel positions depending on the external dimensions and mounting hole pitches.
										Q38B	Yes	8	○ (-75.5)	○ (-32)	○ (-79.5)	○ (-38)	
JW-316KB	Yes	6	Q38BLS	Yes	8	▲ (97.5)	◎	▲ (93.5)	○ (-8)	Q312B	Yes	12	▲ (106.5)	○ (-32)	▲ (102.5)	○ (-38)	·You may need to reconsider the panel positions depending on the external dimensions and mounting hole pitches.
										Q38B	Yes	8	○ (-4.5)	○ (-32)	○ (-8.5)	○ (-38)	
			Q35BLS	Yes	5	○ (-7.5)	◎	○ (-11.5)	○ (-8)	Q35B	Yes	5	○ (-87.5)	○ (-32)	○ (-92.1)	○ (-38)	
JW-314KB	Yes	4	Q35BLS	Yes	5	▲ (63.5)	◎	▲ (59.5)	○ (-8)	Q38B	Yes	8	▲ (66.5)	○ (-32)	▲ (62.5)	○ (-38)	·You may need to reconsider the panel positions depending on the external dimensions and mounting hole pitches.
										Q35B	Yes	5	○ (-16.5)	○ (-32)	○ (-21.1)	○ (-38)	
										Q33B	Yes	3	○ (-72.5)	○ (-32)	○ (-76.5)	○ (-38)	

*1: Values in parentheses indicate differences in dimensions (unit: mm) between the MELSEC-Q series compatible modules and JW series modules.
*2: Exercise caution when distance between holes is near.

2. When using an extension base unit

◎: Same, ○: JW series is larger, ▲: JW series is smaller

JW series base unit			AnS-size Q series large type base unit							MELSEC-Q series base unit							Remarks
Model	Includes power supply	Maximum number of slots	Model	Includes power supply	Maximum number of slots	Comparison*1 (MELSEC-Q series - JW series) External dimensions Width	Height	Mounting Dimensions *2 Width	Height	Model	Includes power supply	Maximum number of slots	Comparison*1 (MELSEC-Q series - JW series) External dimensions Width	Height	Mounting Dimensions *2 Width	Height	
JW-38ZB	Yes	8	Q68BLS	Yes	8	▲ (52)	◎	▲ (48)	○ (-8)	Q612B	Yes	12	▲ (71)	○ (-32)	▲ (65)	○ (-38)	·You may need to reconsider the panel positions depending on the external dimensions and mounting hole pitches.
										Q68B	Yes	8	○ (-40)	○ (-32)	○ (-46)	○ (-38)	
JW-36ZB	Yes	6	Q68BLS	Yes	8	▲ (123)	◎	▲ (119)	○ (-8)	Q612B	Yes	12	▲ (142)	○ (-32)	▲ (136)	○ (-38)	·You may need to reconsider the panel positions depending on the external dimensions and mounting hole pitches.
										Q68B	Yes	8	▲ (31)	○ (-32)	▲ (25)	○ (-38)	
			Q65BLS	Yes	5	▲ (18)	◎	▲ (14)	○ (-8)	Q65B	Yes	5	○ (-52)	○ (-32)	○ (-58.6)	○ (-38)	
			Q55BLS	No	5	○ (-37)	◎	○ (-41)	○ (-8)	Q55B	No	5	○ (-108)	○ (-32)	○ (-114)	○ (-38)	
JW-34ZB	Yes	4	Q68BLS	Yes	8	▲ (194)	◎	▲ (190)	○ (-8)	Q68B	Yes	8	▲ (102)	○ (-32)	▲ (96)	○ (-38)	·You may need to reconsider the panel positions depending on the external dimensions and mounting hole pitches.
										Q65B	Yes	5	▲ (19)	○ (-32)	▲ (12.4)	○ (-38)	
			Q65BLS	Yes	5	▲ (89)	◎	▲ (85)	○ (-8)	Q63B	Yes	3	○ (-37)	○ (-32)	○ (-43)	○ (-38)	
										Q55B	No	5	○ (-37)	○ (-32)	○ (-43)	○ (-38)	
			Q55BLS	No	5	▲ (34)	◎	▲ (30)	○ (-8)	Q52B	No	2	○ (-120)	○ (-32)	○ (-126.5)	○ (-38)	

*1: Values in parentheses indicate differences in dimensions (unit: mm) between the MELSEC-Q series compatible modules and JW series modules.
*2: Exercise caution when distance between holes is near.

Slot Positions

The slot positions differ between the New Satellite JW Series and the MELSEC-Q series. After replacement, change the slot positions of modules and adjust the length of cables.

Note

The size of mounting holes for the AnS-size Q series large type base unit is the same as that for the New Satellite JW Series, and therefore the mounting holes are used as the reference for left-aligned and right-aligned installations. For MELSEC-Q series base units, the size of mounting holes are different from that for the New Satellite JW Series, and therefore the edge of the base unit is used as the reference for left-aligned and right-aligned installations. Values in parentheses indicate differences in external dimensions with New Satellite JW Series modules.

When using a main base unit

(1) JW-28KB, JW-38KB → Q38BLS / Q38B, Q312B

AnS-size Q series large type base unit

Left-aligned installation

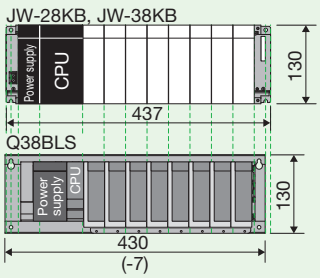

Right-aligned installation

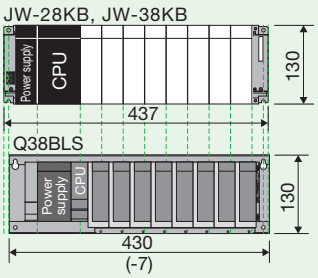

MELSEC-Q series base unit

Unit: mm

Left-aligned installation

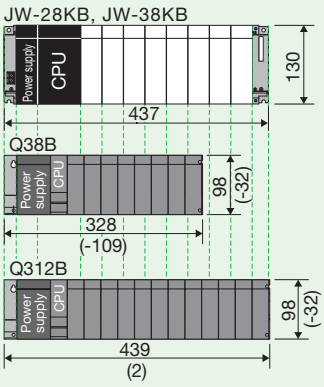

Right-aligned installation

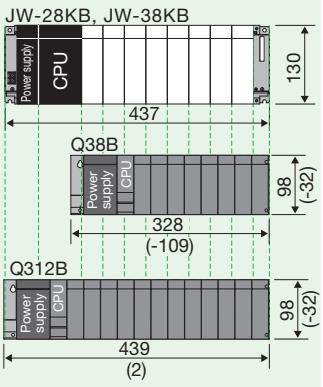

(2) JW-26KB, JW-36KB → Q35BLS, Q38BLS / Q35B, Q38B, Q312B

AnS-size Q series large type base unit

Left-aligned installation

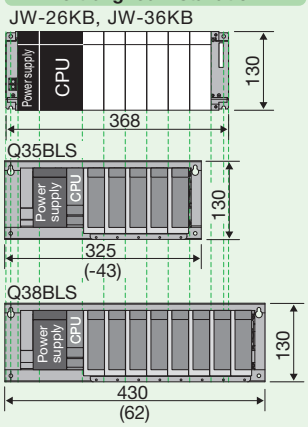

Right-aligned installation

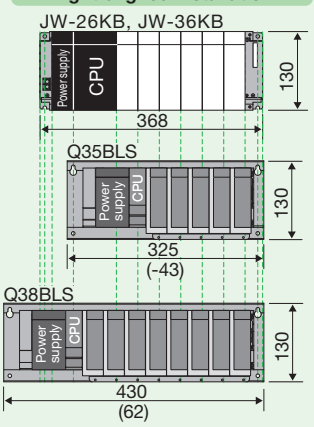

MELSEC-Q series base unit

Unit: mm

Left-aligned installation

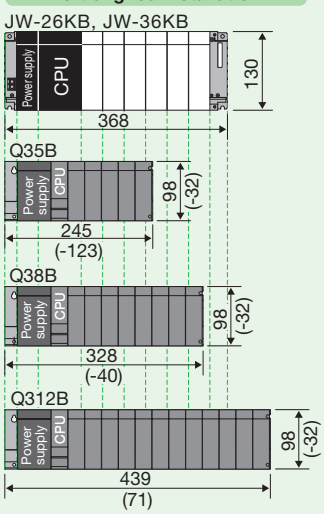

Right-aligned installation

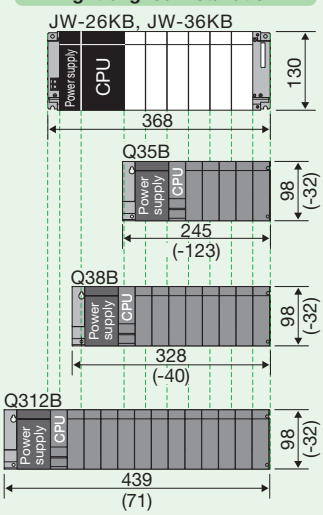

(3) JW-24KB, JW-34KB → Q35BLS / Q33B, Q35B, Q38B

AnS-size Q series large type base unit

Left-aligned installation

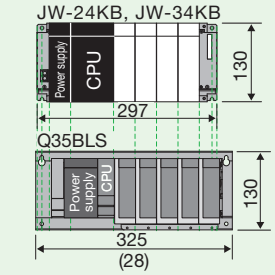

Right-aligned installation

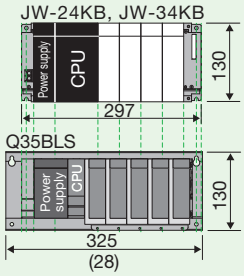

MELSEC-Q series base unit

Unit: mm

Left-aligned installation

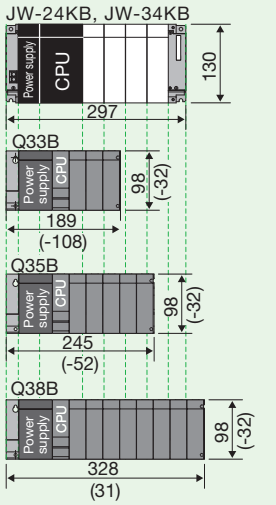

Right-aligned installation

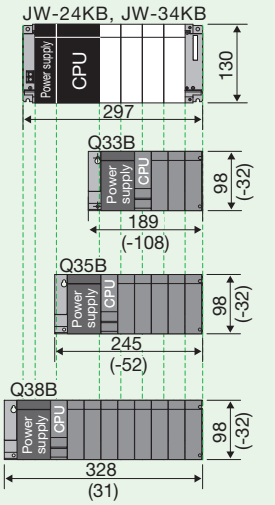

(4) JW-318KB → Q38BLS / Q38B, Q312B

AnS-size Q series large type base unit

Left-aligned installation

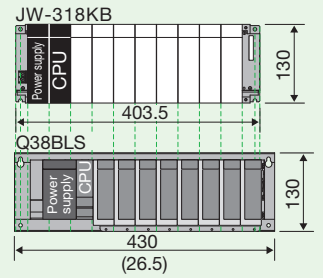

Right-aligned installation

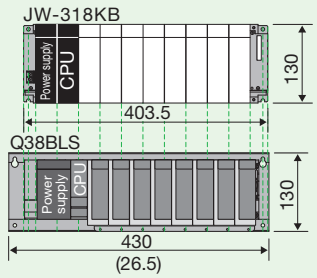

MELSEC-Q series base unit

Unit: mm

Left-aligned installation

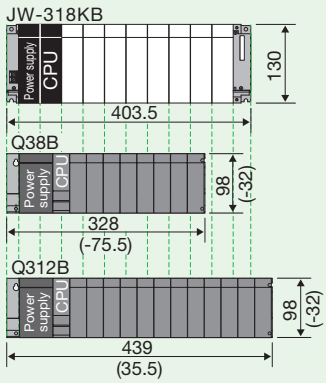

Right-aligned installation

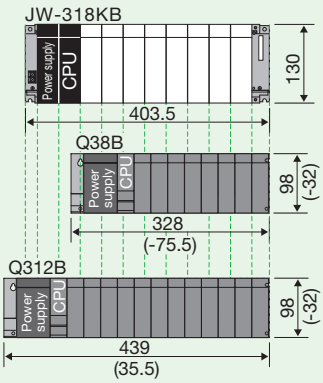

(5) JW-316KB → Q35BLS, Q38BLS / Q35B, Q38B, Q312B

AnS-size Q series large type base unit

Left-aligned installation

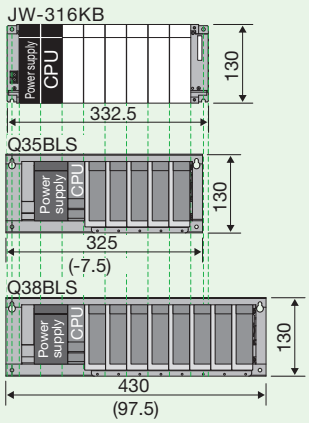

Right-aligned installation

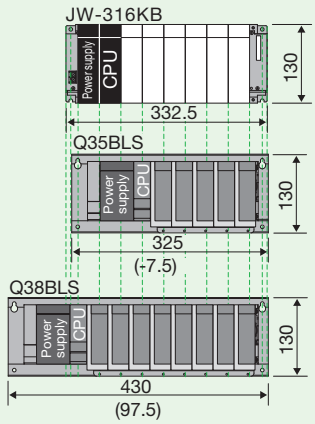

MELSEC-Q series base unit

Unit: mm

Left-aligned installation

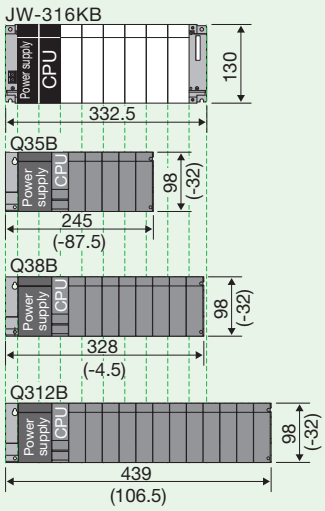

Right-aligned installation

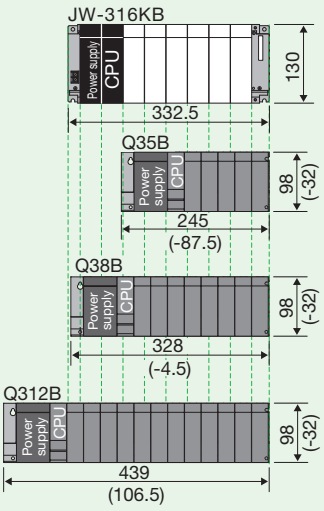

(6) JW-314KB → Q35BLS / Q33B, Q35B, Q38B

AnS-size Q series large type base unit

Left-aligned installation

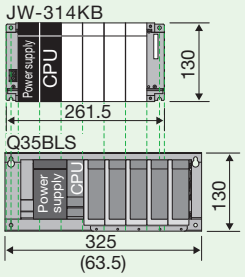

Right-aligned installation

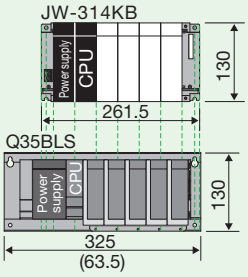

MELSEC-Q series base unit

Unit: mm

Left-aligned installation

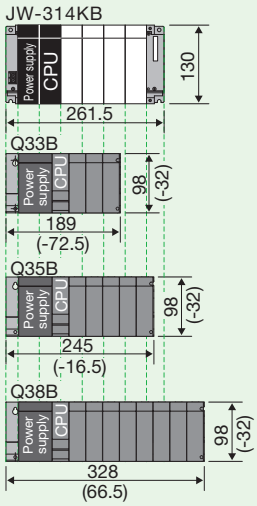

Right-aligned installation

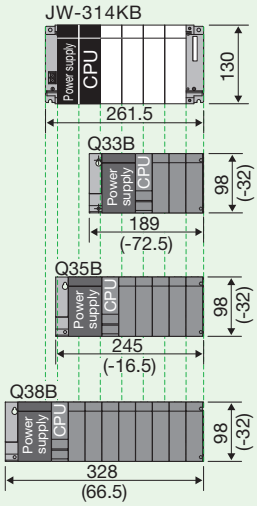

When using an extension base unit

(1) JW-38ZB → Q68BLS / Q68B, Q612B

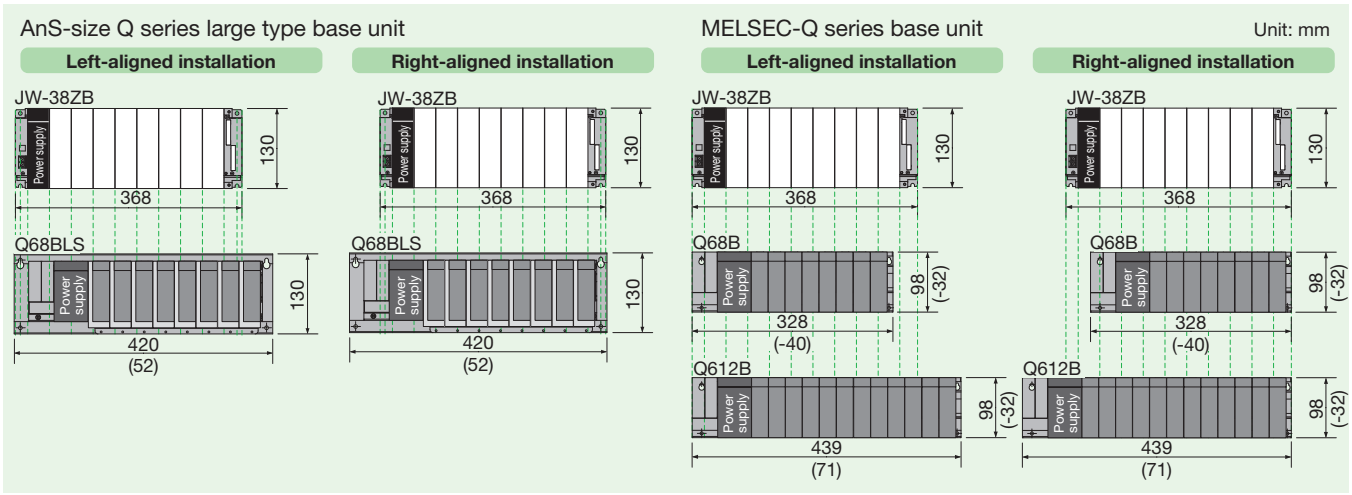

(2) JW-36ZB → Q65BLS, Q68BLS / Q55BLS / Q65B, Q68B, Q612B / Q55B

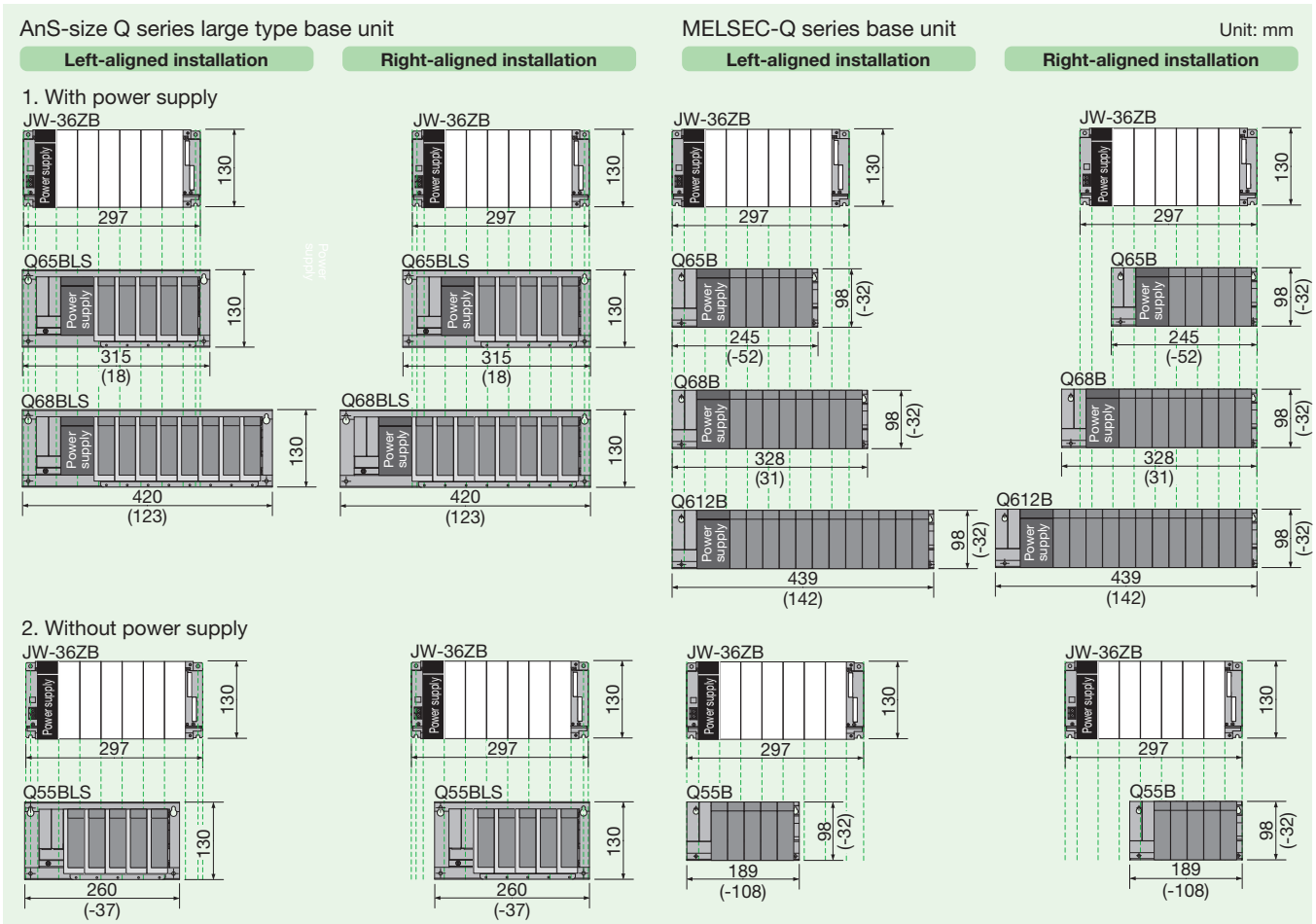

(3) JW-34ZB → Q65BLS, Q68BLS / Q55BLS / Q63B, Q65B, Q68B / Q52B, Q55B

AnS-size Q series large type base unit

MELSEC-Q series base unit

Unit: mm

Left-aligned installation | **Right-aligned installation** | **Left-aligned installation** | **Right-aligned installation**

1. With power supply

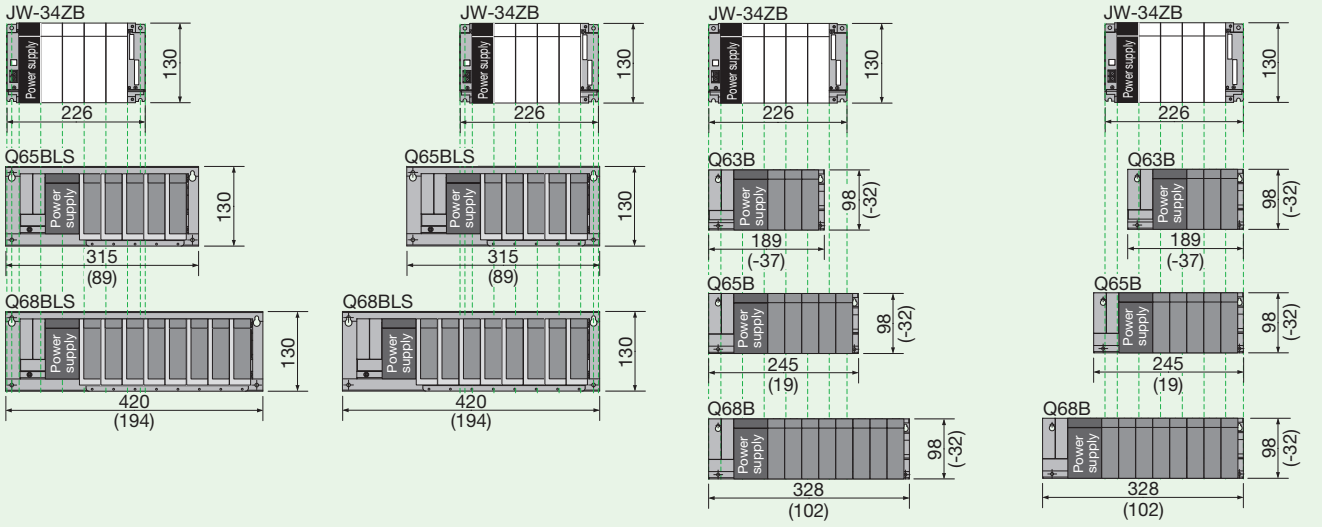

2. Without power supply

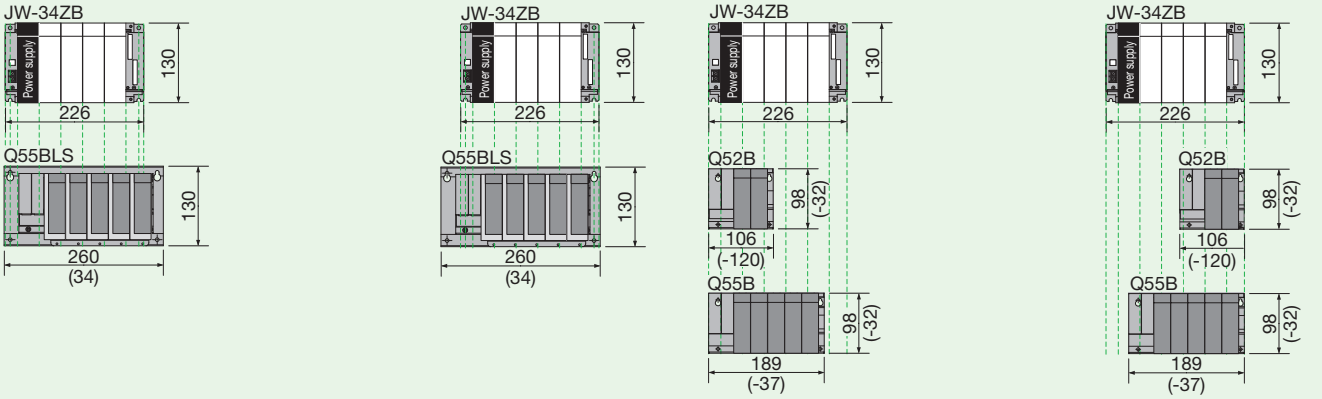

Usage Precautions

Module Width

We recommend that you use the Mitsubishi Electric AnS-size Q series large type base unit (wiring space of 34.5mm) if wiring in the following scenario (1) causes interference with other mounted modules.

(1) Since the width of MELSEC-Q series modules is smaller (New Satellite JW Series: 35mm → MELSEC-Q series: 27.4mm), the wiring area becomes smaller as well. Check the wiring area when mounting a conversion adapter.

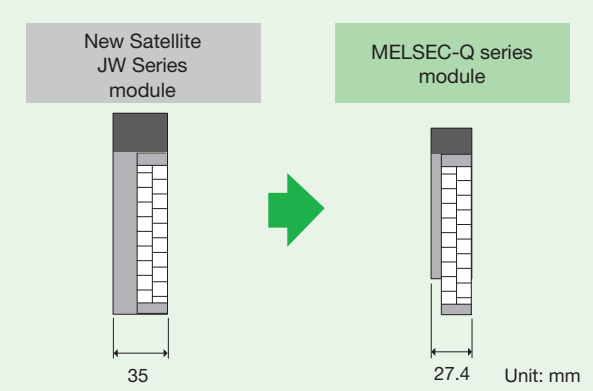

(2) If the wiring causes interference with adjacent modules, take an action such as lifting the wiring forward to prevent interference.

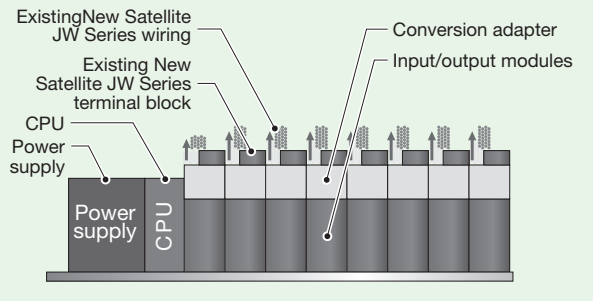

(3) If interference still occurs even when you lift the wiring, keep the next slot open to secure a space for wiring.

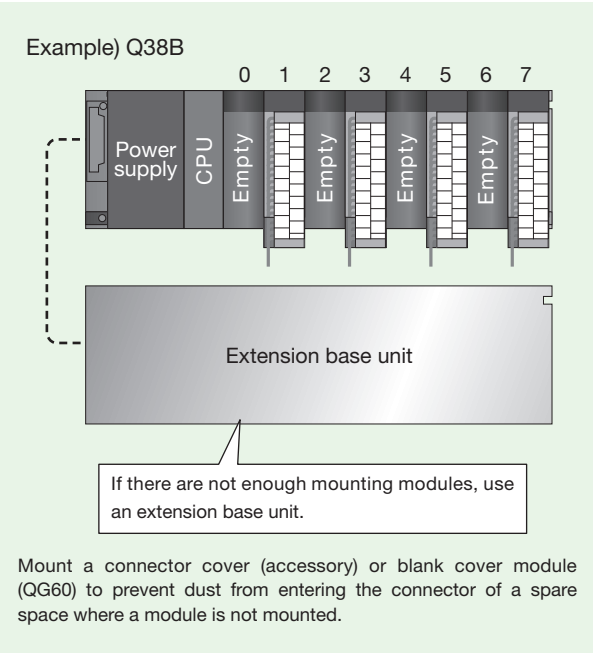

Mount a connector cover (accessory) or blank cover module (QG60) to prevent dust from entering the connector of a spare space where a module is not mounted.

Depth

The following tables list the depth dimensions. The depth is larger, so verification is required for mounting.
The values in parentheses, which are 9mm smaller, represent the depth when the Mitsubishi Electric AnS-size Q series large type base unit is not used.

New Satellite JW : New Satellite JW Series MELSEC-Q : MELSEC-Q series

Conversion adapter	ERNT-2JQ210NS		ERNT-2JQ212S	ERNT-2JQ234N264N ERNT-2JQ232S262S
MELSEC-Q series module	QX10/QX40/QX40-S1/ QX70/QX80/QY10	QY22	QY40P/QY50/QY70	QX41/QX41-S1/ QX41-S2/QX71/QY41H
Depth	137.5mm (128.5mm)	159.5mm (150.5mm)	137.5mm (128.5mm)	180.1mm (171.1mm)
Mounting diagram	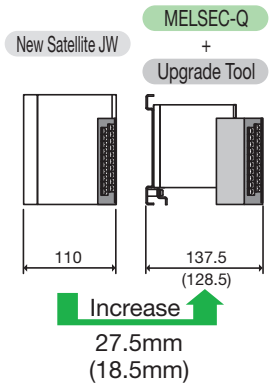 27.5mm (18.5mm)	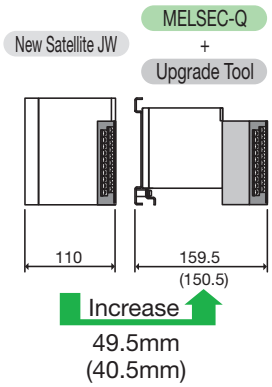 49.5mm (40.5mm)	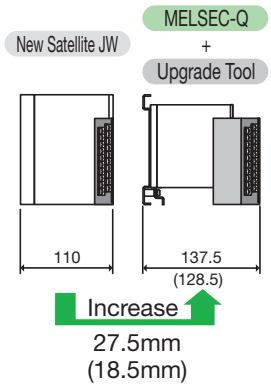 27.5mm (18.5mm)	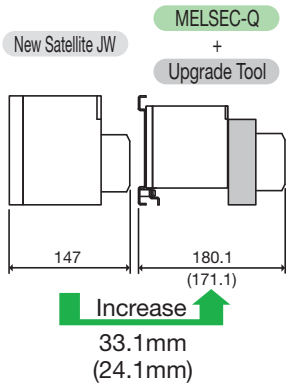 33.1mm (24.1mm)

*: Each depth is measured from the panel surface.
New Satellite JW Series: Base unit + Input/output modules + Terminal block (connector)
MELSEC-Q series + Upgrade tool: Base unit + Input/output modules + Conversion adapter + Terminal block (connector)

Check for Interference with Adjacent Modules

We recommend that you use the Mitsubishi Electric AnS-size Q series large type base unit because some combinations of adjacent conversion adapters cause interference of the terminal blocks.
Leave one slot open to prevent interference of the terminal blocks when the MELSEC-Q series base unit is used and the adjacent conversion adapters are as follows.

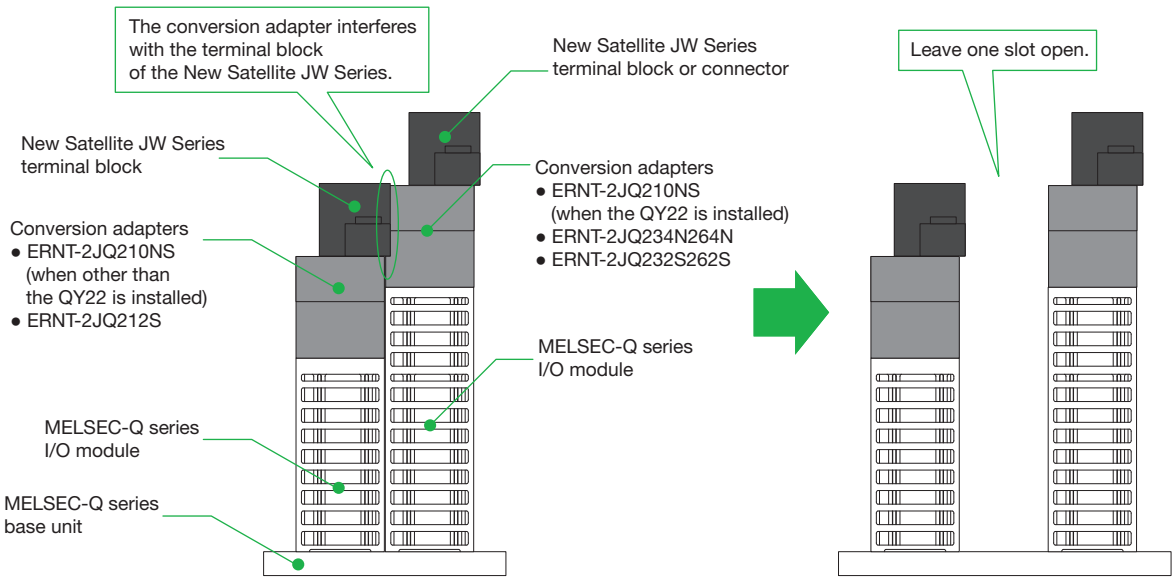

External Dimensions

Conversion Adapter

Model name:
ERNT-2JQ210NS

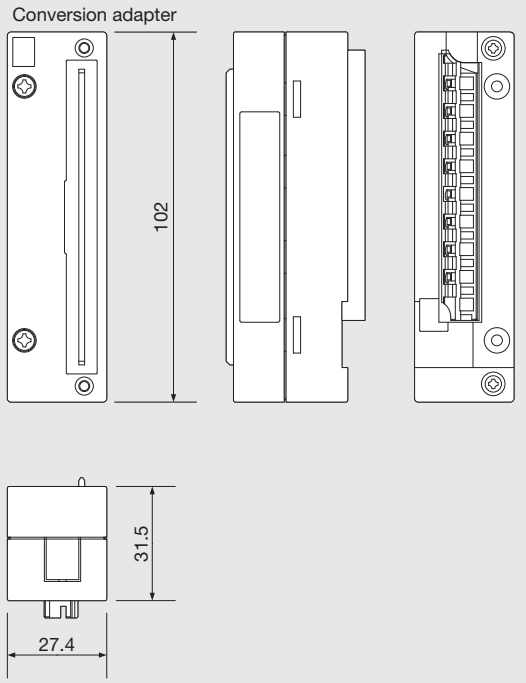

Weight: 75g

Model name:
ERNT-2JQ212S

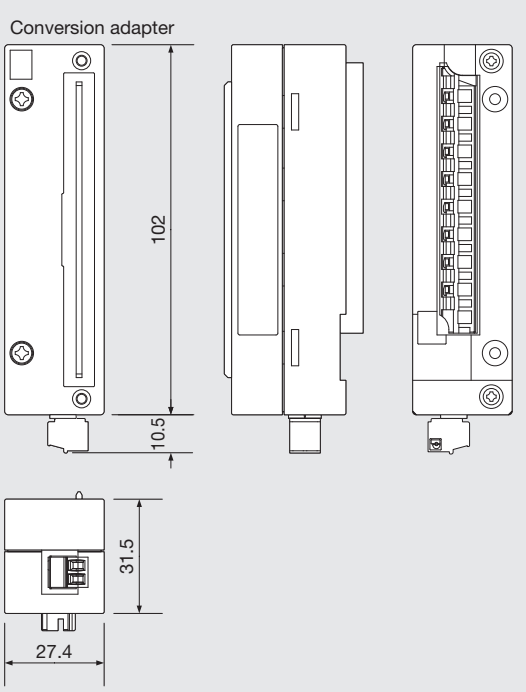

Weight: 80g

Model names:

ERNT-2JQ234N264N
ERNT-2JQ232S262S

Unit: mm

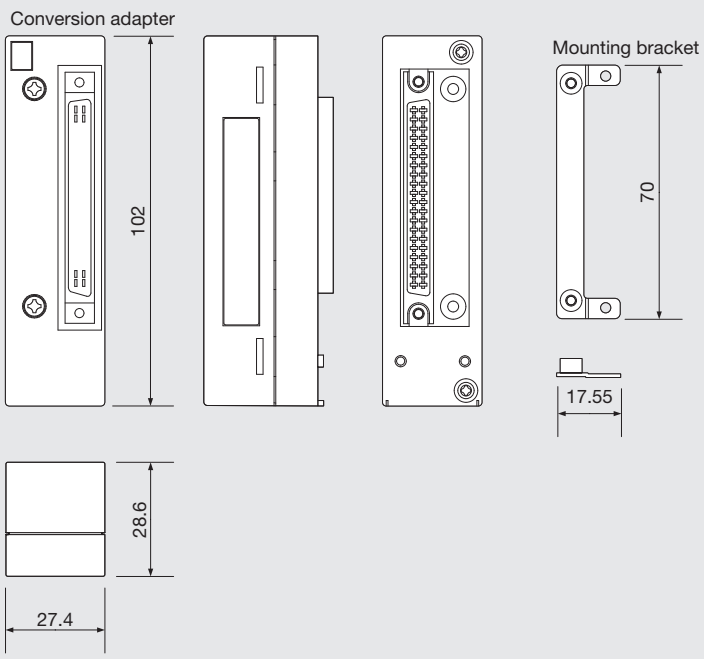

Weight: 75g

GL Q series MEMOCON-SC GL Series (2000 Series I/O) ⇨MELSEC-Q Series Upgrade Tool

Upgrading from the MEMOCON-SC GL Series (2000 Series I/O) to the MELSEC-Q Series

Simplifies replacement with the MELSEC-Q series
The upgrade tool makes it easy to replace YASKAWA PLC MEMOCON-SC GL Series I/O modules (2000 Series I/O) with Mitsubishi programmable controller MELSEC-Q series.

Significantly shortens the time required for input and output module wiring, and significantly reduces wiring errors
The upgrade tool allows you to connect the wiring connected to the MEMOCON-SC GL Series (2000 Series I/O) input and output modules as is to the MELSEC-Q series using a conversion adapter. (Some power supply and common terminal connection changes required.)

Product Overview

This upgrade tool comprises a "conversion adapter" that is used to transfer the existing wiring of YASKAWA PLC MEMOCON-SC GL Series (GL40S/60S/60H/70H) input/output modules (2000 Series I/O) to the Mitsubishi programmable controller MELSEC-Q series input/output modules, and a "conversion adapter support flange" that is used to secure the conversion adapter at the bottom.

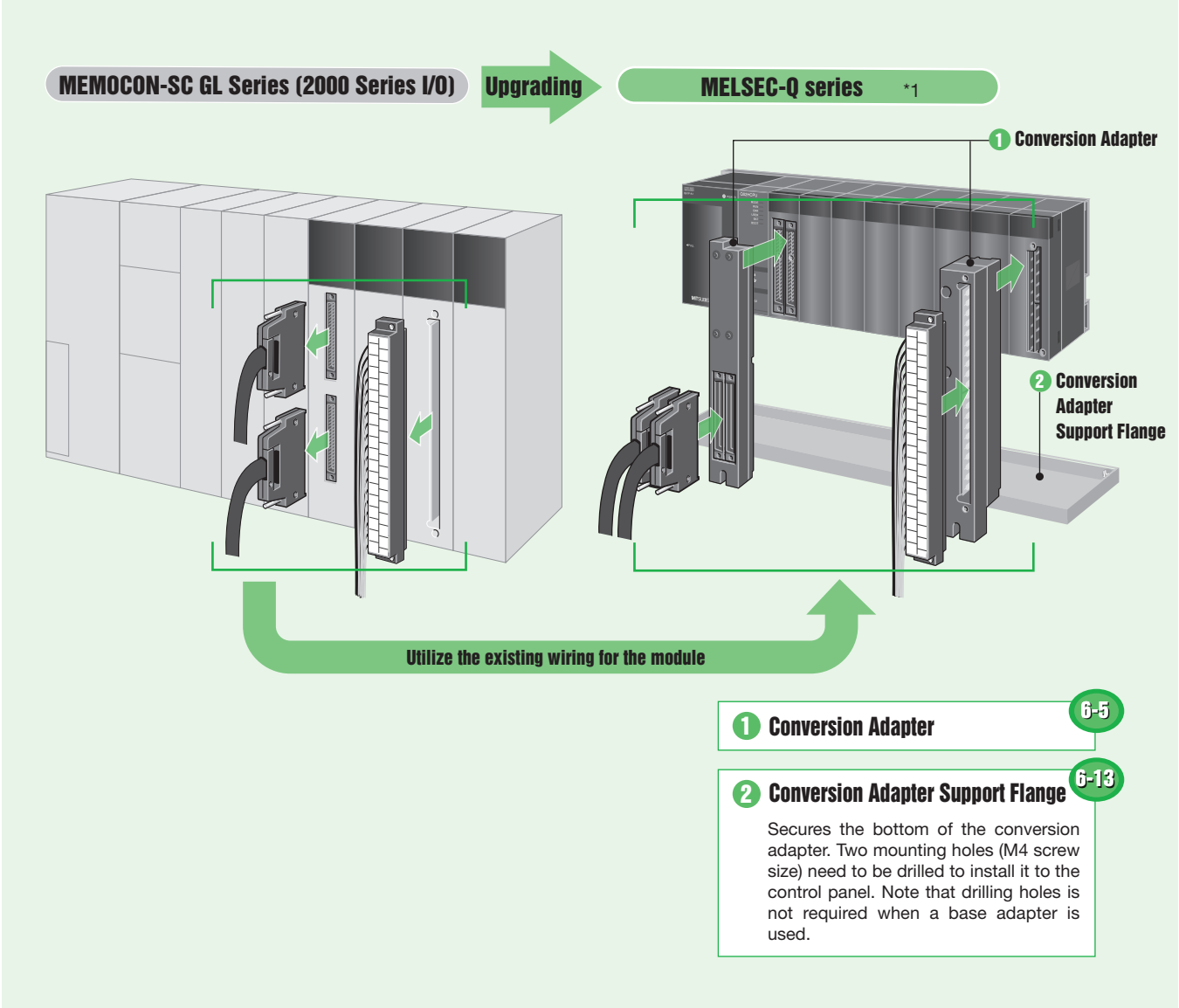

1 Conversion Adapter 6-5

2 Conversion Adapter Support Flange 6-13

Secures the bottom of the conversion adapter. Two mounting holes (M4 screw size) need to be drilled to install it to the control panel. Note that drilling holes is not required when a base adapter is used.

*1: When replacing YASKAWA Electric PLC MEMOCON-SC GL Series (GL40S/60S/60H/70H) input/output modules (2000 Series I/O) with Mitsubishi programmable controller MELSEC-Q series, verification of the mounting is required due to the change in module width and depth dimensions. There may be a case that the terminal block of the conversion adapter interferes with the adjacent conversion adapter. For details, refer to "Usage Precautions" on page 6-28 in this catalog.

MITSUBISHI ELECTRIC CORPORATION

Upgrading using the Q series large type base unit

Using the Mitsubishi Electric Q series large type base unit (Q☐☐BL) eliminates the need to secure wiring space and check for interference between adjacent conversion adapter terminal blocks.
Note that the pitch of mounting holes in some models are similar to that in the GL Series, and therefore mounting positions must be reconsidered.

●If the wiring interferes with an adjacent module, wiring space can be secured by utilizing the Q series large type base unit.

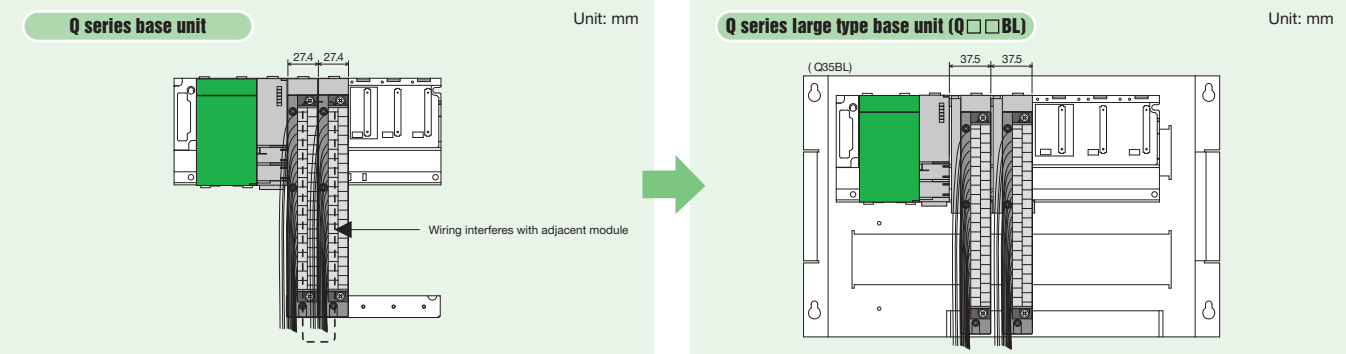

●If the terminal block of a conversion adapter interferes with the adjacent conversion adapter, interference can be avoided by using the Q series large type base unit.

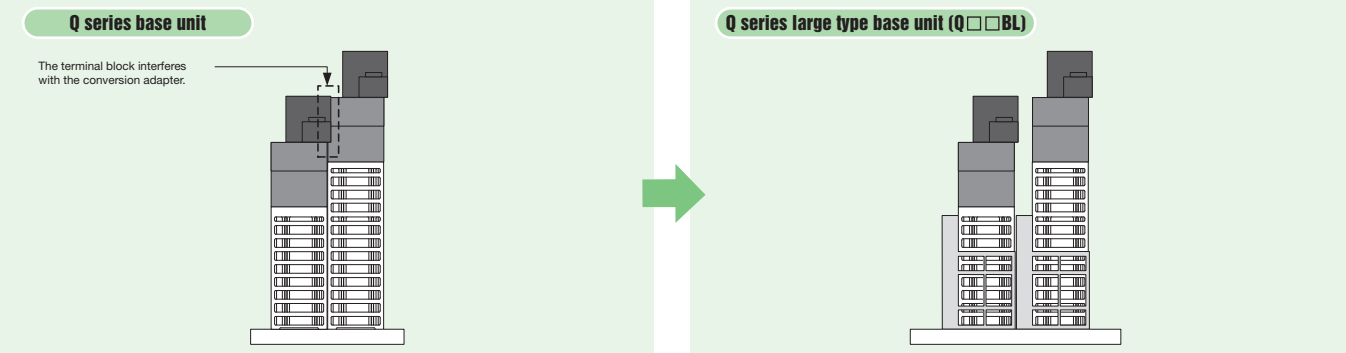

●Q series large type base unit configuration

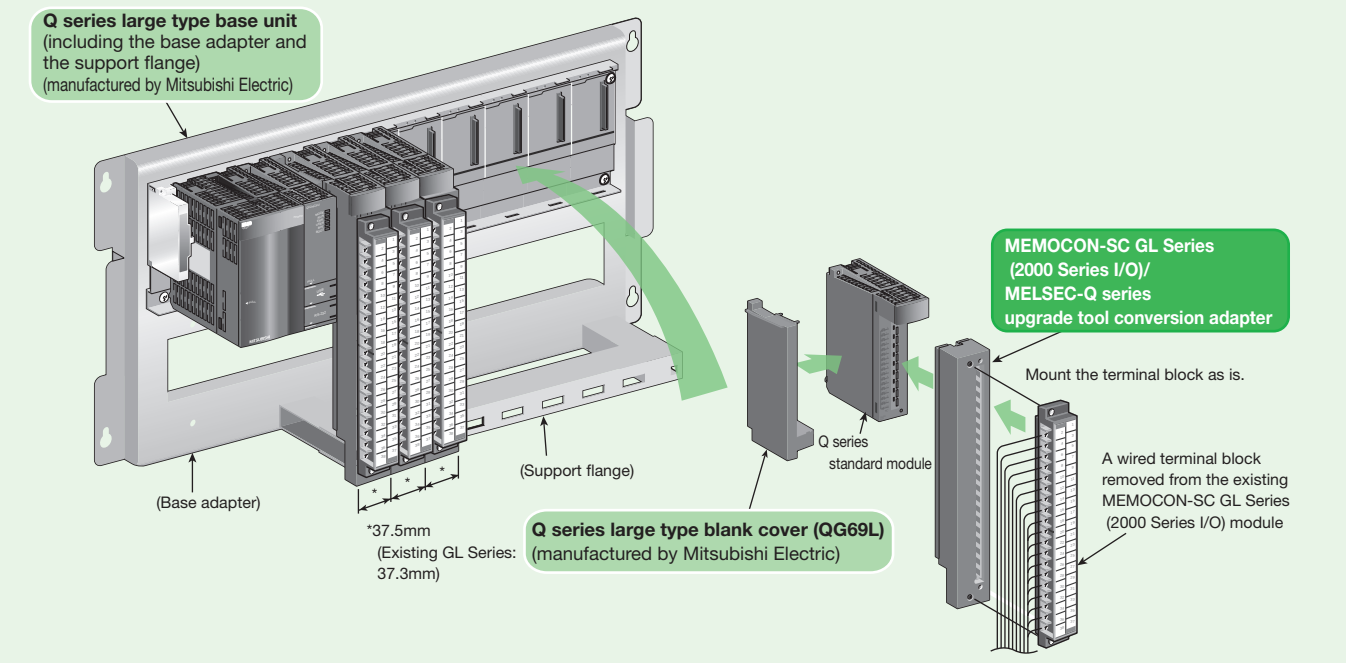

●The 2-slot type conversion adapter is not applicable.
●For details on mounting dimensions, refer to page 6-18 in this catalog.

Q Series Large Type Base Unit List

Model	Description	Number of slots
Q38BL	Main base unit	8
Q35BL		5
Q68BL	Extension base unit with power supply	8
Q65BL		5
Q55BL	Extension base unit without power supply	5

Q Series Large Type Blank Cover

Model	Description
QG69L	Used to adjust gaps between modules

Model List

1 Conversion adapter

When selecting a conversion adapter, be sure to refer to the module specification comparison charts and notes on pages 6-5 to 6-12. These pages describe precautions such as differences in the number of points per common. For detailed specifications and general specifications not described in the module specification comparison charts, refer to the user's manual for the module used. Note that the areas where the specifications differ between the MEMOCON-SC GL Series (2000 Series I/O) and the MELSEC-Q series are restricted in terms of specifications during replacement. Verify the specifications of the connected devices.

For Input/Output Modules

[1-slot type] (Applicable to MELSEC-Q series large type base units (Q□□BL) as well)

Input/Output	MEMOCON-SC GL Series (2000 Series I/O) module model before replacement	MELSEC-Q series module model after replacement	Conversion adapter				Page
			Model	Shape		No. of input/ output points	
				2000 Series I/O	MELSEC-Q series		
Input	JAMSC-B2501A	QX10	ERNT-1Y2Q501	Terminal block (20 points)	Terminal block (18 points)	16	6-5
	JAMSC-B2601	QX40, QX40-S1, QX70 *3 *7	ERNT-1Y2Q601611				6-5
	JAMSC-B2611	QX50					
	JAMSC-B2603	QX41, QX41-S2, QX71 *4 *8	ERNT-1JQ32N34N *1	Terminal block (38 points)	Connector (40P)	32	6-6
	JAMSC-B2607	QX71					
	JAMSC-B2605	QX42, QX42-S1, QX72 *5	ERNT-1Y2Q615625	Connector (40P) × 2	Connector (40P) × 2	64	6-7
	JAMSC-B2615						
	JAMSC-B2625	QX72					
Output	JAMSC-B2500	QY22	ERNT-1Y2Q500	Terminal block (20 points)	Terminal block (18 points)	16	6-8
	JAMSC-B2600	QY40P, QY50	ERNT-1Y2Q600				6-9
	JAMSC-B2602A	QY41H *6	ERNT-1Y2Q602606	Terminal block (38 points)	Connector (40P)	32	6-9
	JAMSC-B2606						
	JAMSC-B2604	QY42P	ERNT-CQCY213 *2	Connector (40P) × 2	Connector (40P) × 2	64	6-10

*1: A conversion adapter for replacing SHARP JW Series modules (large type) with MELSEC-Q series must be used.
*2: A conversion adapter for replacing OMRON SYSMAC C series modules with MELSEC-Q series must be used.
*3: Consider rewiring to the QX80 if the existing module uses the 24VDC negative common. Also consider using the ERNT-AQTB20 in such cases.
*4: Consider rewiring to the QX81 or QX81-S2 if the existing module uses the24VDC negative common. Also consider using the ERNT-AQTB38-E in such cases.
*5: Consider rewiring to two QX81s or two QX81-S2s if the existing module uses the 24VDC negative common.
*6: Consider rewiring to the QY50 (0.5A, 16 points) or QY68A (2A, 8 points) if current capacity is required. Also consider using the ERNT-AQTB20 in such cases.
*7: Consider rewiring to the QX40H or QX80H if the existing module uses different power supplies for each 8-point group. Also consider using the ERNT-AQTB20 in such cases.
*8: Consider rewiring to two QX40Hs or two QX80Hs if the existing module uses different power supplies for each 8-point group. Also consider using the ERNT-AQTB20 in such cases.

[2-slot type] (Not applicable to MELSEC-Q series large type base units (Q□□BL))

Input/Output	MEMOCON-SC GL Series (2000 Series I/O) module model before replacement	MELSEC-Q series module model after replacement	Conversion adapter				Page
			Model	Model		No. of input/ output points	
				2000 Series I/O	MELSEC-Q series		
Input	JAMSC-B2505A	QX10 × 2	ERNT-1Y2Q505	Terminal block (38 points)	Terminal block (18 points) × 2	32	6-11
Output	JAMSC-B2504	QY22 × 2	ERNT-1JQ33S *9				6-11
	JAMSC-B2902	QY10 × 2	ERNT-1JQ31N34S *9				6-12
	JAMSC-B2904	QY18A × 2	ERNT-1Y2Q904914				6-12
	JAMSC-B2914						

*9: A conversion adapter for replacing SHARP JW Series modules (large type) with MELSEC-Q series must be used.

☆ Universal conversion adapter (*Requires rewiring. For details, refer to page 7-1 in this catalog.)

Input/output modules in the table below do not support the use of a conversion adapter. These modules, however, can be replaced by using a universal conversion adapter even though rewiring is required. Check that the specifications of MELSEC-Q series modules satisfy the specifications of devices and equipment to be connected.

For Input/Output Modules

Input/Output	MEMOCON-SC GL Series (2000 Series I/O) module model			MELSEC-Q series module model				Universal conversion adapter
	Model	Specifications	No. of points	Model	Specifications	No. of points	No. of required modules	
Input	JAMSC-B2503A	200VAC	16	QX28	100-240VAC	8	2	*10
	JAMSC-B2507A	200VAC	32	QX28	100-240VAC	8	4	*10
Output	JAMSC-B2912	100/200VAC, 24VDC	32	QY10	100-200VAC, 24VDC	16	2	*10
	JAMSC-B2610	48VDC sink type	16	There is no applicable MELSEC-Q series module.				
	JAMSC-B2624	5VDC sink type	64	QY41H	5/12/24VDC sink type	32	2	*10
	JAMSC-B2630	12/24VDC source type	16	QY80	12/24VDC source type	16	1	*10
	JAMSC-B2632	12/24VDC source type	32	QY81P	12/24VDC source type	32	1	*10

*10: The universal conversion adapter (refer to page 7-5) can be used for replacement.

2 Conversion adapter support flange (required)

The same conversion adapter support flange used to replace MELSEC-A series with MELSEC-Q series is used.
A conversion adapter support flange secures the bottom of a conversion adapter. One support flange is required per base unit when a conversion adapter is used.

Note

For panel surface installation, drilling screw holes (M4 screw, 2 locations) is required.
Note that drilling holes is not required when a base adapter is used.

Conversion adapter support flange model	Specifications	Page
ERNT-AQF12	12-slot conversion adapter support flange	6-13
ERNT-AQF8	8-slot conversion adapter support flange	
ERNT-AQF5	5-slot conversion adapter support flange	
ERNT-AQF3	3-slot conversion adapter support flange	

3 Base adapter

The same conversion adapter support flange used to replace MELSEC-A series with MELSEC-Q series is used.
Both the MELSEC-Q series base unit and the conversion adapter support flange can be installed on the base adapter without drilling screw holes.
For the base unit models marked with *1 to *5, two or more base adapter models are applicable.

Note

Two additional mounting holes (M5 screw) and four M5 screws need to be prepared by the user to install the base adapter to the control panel.
(Additional mounting holes are not required if the mounting dimensions before and after replacement are the same and the existing four mounting holes can be used.)

Base adapter model	Mountable						Product dimensions	Page
	MELSEC-Q series base unit					Conversion adapter support flange	Width × Height (mm)	
	12 slots	8 slots	5 slots	3 slots	2 slots			
ERNT-AQB38	Q312B					ERNT-AQF12, ERNT-AQF8	480 × 240	6-17
		Q38B (*1)				ERNT-AQF8		
ERNT-AQB35		Q38B (*1)				ERNT-AQF8, ERNT-AQF5	382 × 240	
			Q35B			ERNT-AQF5		
ERNT-AQB32				Q33B		ERNT-AQF3	247 × 240	
ERNT-AQB68	Q612B					ERNT-AQF12, ERNT-AQF8	466 × 240	
		Q68B (*2)				ERNT-AQF8		
ERNT-AQB65		Q68B (*2)				ERNT-AQF8, ERNT-AQF5	352 × 240	
			Q65B (*3) Q55B (*4)			ERNT-AQF5		
ERNT-AQB62				Q63B	Q52B (*5)	ERNT-AQF3	238 × 240	
ERNT-AQB58		Q68B (*2)				ERNT-AQF8	411 × 240	
ERNT-AQB55			Q65B (*3) Q55B (*4)			ERNT-AQF5	297 × 240	
ERNT-AQB52					Q52B (*5)	ERNT-AQF3	183 × 240	

Conversion Adapter

Specifications

For Input/Output Modules

1-slot type (Applicable to MELSEC-Q series large type base units (Q□□BL) as well)

(1) ERNT-1Y2Q501 Terminal block (20P)→Terminal block (18P)

Conversion adapter model	MEMOCON-SC GL Series (2000 Series I/O) module model	No. of input points	MELSEC-Q series module model
ERNT-1Y2Q501	JAMSC-B2501A	16	QX10

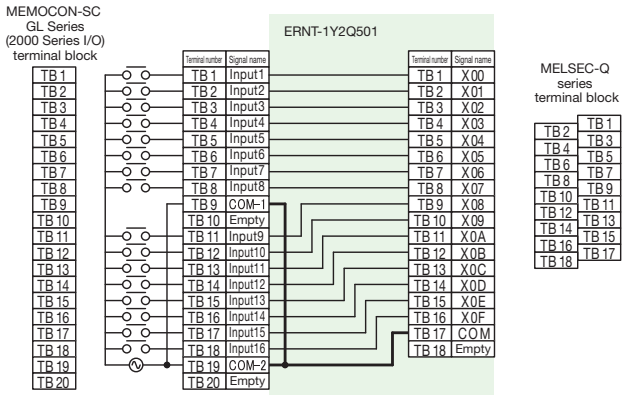

[Specification comparison chart]

Specifications \ Model		MEMOCON-SC GL Series (2000 Series I/O)	MELSEC-Q series
		JAMSC-B2501A	QX10
No. of input points		16	16
Rated input voltage		100-120VAC, 50/60Hz	100-120VAC, 50/60Hz
Rated input current		Approx. 10mA (100VAC, 60Hz)	Approx. 8mA (100VAC, 60Hz) Approx. 7mA (100VAC, 50Hz)
Input impedance		Approx. 10kΩ (60Hz)	Approx. 12kΩ (60Hz) Approx. 15kΩ (50Hz)
Inrush current		–	Max. 200mA 1ms (132VAC)
Operating voltage/ current	ON	–	80VAC / 5mA
	OFF	–	30VAC / 1.7mA
Response time	OFF→ON	15ms or less	15ms or less
	ON→OFF	25ms or less	20ms or less
Isolation method		Photocoupler isolation	Photocoupler isolation
Wiring method for common		8 points/common	16 points/common
External interface		20-point terminal block	18-point terminal block

Notes 1. In a case where the number of points per common changes from 8 (two circuits) to 16 and the terminal numbers TB9 and TB18 on the MEMOCON-SC GL Series (2000 Series I/O) side are used separately, a wiring change is required.
2. For ▭ areas, check that the specifications of MELSEC-Q series modules satisfy the specifications of devices and equipment to be connected.
3. For detailed specifications and general specifications not described in the specification comparison charts, refer to the user's manual for the module used. Note that the areas where the specifications differ between the MEMOCON-SC GL Series (2000 Series I/O) and the MELSEC-Q series are restricted in terms of specifications during replacement. Verify the specifications of the connected devices.

(2) ERNT-1Y2Q601611 Terminal block (20P)→Terminal block (18P)

Conversion adapter model	MEMOCON-SC GL Series (2000 Series I/O) module model	No. of input points	MELSEC-Q series module model
ERNT-1Y2Q601611	JAMSC-B2601	16	QX40 QX40-S1 QX70
	JAMSC-B2611	16	QX50

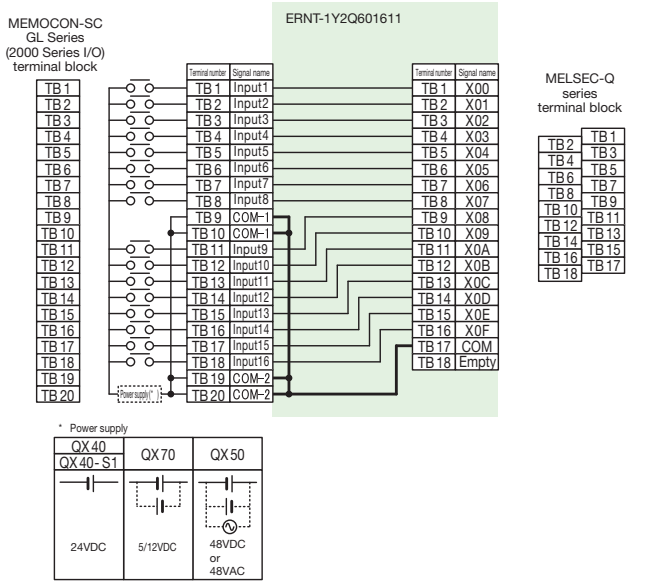

* Power supply

QX40 QX40-S1	QX70	QX50
24VDC	5/12VDC	48VDC or 48VAC

[Specification comparison chart]

Specifications \ Model		MEMOCON-SC GL Series (2000 Series I/O)	MELSEC-Q series		
		JAMSC-B2601 Positive common/negative common shared type	QX40 Positive common type	QX40-S1 Positive common type	QX70 Positivecommon/ negativecommon shared type
No. of input points		16	16	16	16
Rated input voltage		12/24VDC	24VDC	24VDC	5/12VDC
Rated input current		Approx.10mA (24VDC) Approx. 5mA (12VDC)	Approx. 4mA	Approx. 6mA	Approx. 3.3mA (12VDC) Approx. 1.2mA (5VDC)
Input impedance		Approx. 2.4kΩ	Approx. 5.6kΩ	Approx. 3.9kΩ	Approx. 3.3kΩ
Inrush current		–	–	–	–
Operating voltage/ current	ON	8V	19V / 3mA	19V / 4mA	3.5V / 1mA
	OFF	4V	11V / 1.7mA	11V / 1.7mA	1V / 0.1mA
Response time	OFF→ON	5ms or less	1/5/10/20 /70ms or less	0.1/0.2/0.4/0.6 /1ms or less	1/5/10/20 /70ms or less
	ON→OFF	5ms or less	1/5/10/20 /70ms or less	0.1/0.2/0.4/0.6 /1ms or less	1/5/10/20 /70ms or less
Isolation method		Photocoupler isolation	Photocoupler isolation	Photocoupler isolation	Photocoupler isolation
Wiring method for common		8 points/common	16 points/common	16 points/common	16 points/common
External interface		20-point terminal block	18-point terminal block	18-point terminal block	18-point terminal block

Specifications \ Model		MEMOCON-SC GL Series (2000 Series I/O)	MELSEC-Q series	
		JAMSC-B2611 Positive common/ negative common shared type	QX50 DC: Positive common/ negative common shared type	
No. of input points		16	16	
Rated input voltage		48VDC	48VDC	48VAC
Rated input current		Approx. 9.4mA	Approx. 4mA	
Input impedance		Approx. 5kΩ	Approx. 11.2kΩ	
Operating voltage/ current	ON	30V	28V / 2.5mA	
	OFF	20V	10V / 1.0mA	
Response time	OFF→ON	5ms or less	5ms or less	15ms or less
	ON→OFF	5ms or less	20ms or less	20ms or less
Isolation method		Photocoupler isolation	Photocoupler isolation	
Wiring method for common		8 points/common	16 points/common	
External interface		20-point terminal block	18-point terminal block	

Notes 1. In a case where the number of points per common changes from 8 (two circuits) to 16 and the terminal numbers TB9/TB10 and TB19/TB20 on the MEMOCON-SC GL Series (2000 Series I/O) side are used separately, a wiring change is required.
2. For ▭ areas, check that the specifications of MELSEC-Q series modules satisfy the specifications of devices and equipment to be connected.
3. For detailed specifications and general specifications not described in the specification comparison charts, refer to the user's manual for the module used. Note that the areas where the specifications differ between the MEMOCON-SC GL Series (2000 Series I/O) and the MELSEC-Q series are restricted in terms of specifications during replacement. Verify the specifications of the connected devices.
4. Consider rewiring to the QX80 if the existing module uses the 24VDC negative common. Also consider using the ERNT-AQTB20 in such cases.
5. Consider rewiring to the QX40H or QX80H if the existing module uses different power supplies for each 8-point group. Also consider using the ERNT-AQTB20 in such cases.

(3) ERNT-1JQ32N34N Terminal block (38P)→Connector (40P)

Conversion adapter model	MEMOCON-SC GL Series (2000 Series I/O) module model	No. of input points	MELSEC-Q series module model
ERNT-1JQ32N34N*1	JAMSC-B2603	32	QX41 QX41-S2 QX71
	JAMSC-B2607	32	QX71

*1: A conversion adapter for replacing SHARP JW Series modules (large type) with MELSEC-Q series must be used.

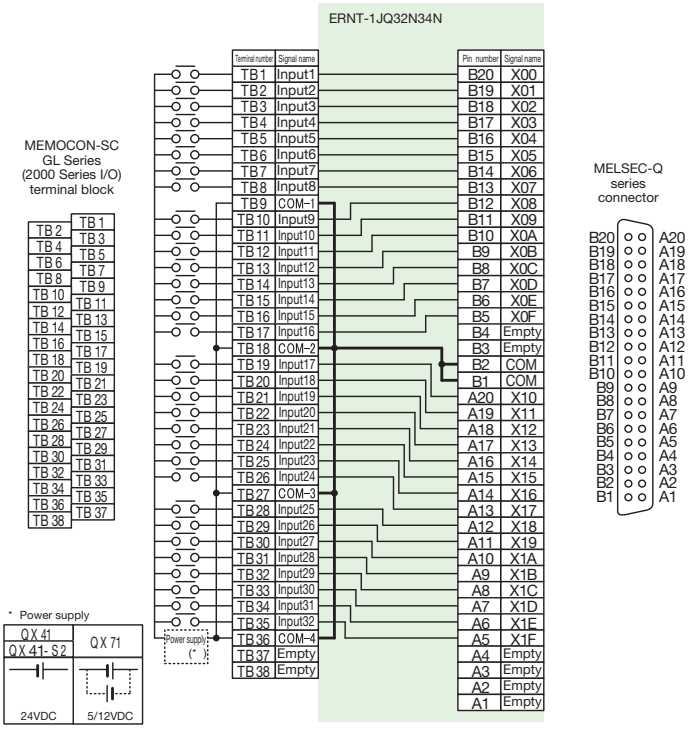

[Specification comparison chart]

Model / Specifications		MEMOCON-SC GL Series (2000 Series I/O)	MELSEC-Q series		
		JAMSC-B2603 Positive common/negative common shared type	QX41 Positive common type	QX41-S2 Positive common type	QX71 Positive common/negative common shared type
No. of input points		32	32	32	32
Rated input voltage		12/24VDC	24VDC	24VDC	5/12VDC
Rated input current		Approx. 10mA (24VDC) Approx. 5mA (12VDC)	Approx. 4mA	Approx. 6mA	Approx. 3.3mA (12VDC) Approx. 1.2mA (5VDC)
Input impedance		Approx. 2.4kΩ	Approx. 5.6kΩ	Approx. 3.6kΩ	Approx. 3.3kΩ
Inrush current		–	–	–	–
Operating voltage/ current	ON	9V	19V / 3mA	15V / 3mA	3.5V / 1mA
	OFF	6V	11V / 1.7mA	5V / 1.7mA	1V / 0.1mA
Response time	OFF→ON	7ms or less	1/5/10/20 /70ms or less	1/5/10/20 /70ms or less	1/5/10/20 /70ms or less
	ON→OFF	10ms or less	1/5/10/20 /70ms or less	1/5/10/20 /70ms or less	1/5/10/20 /70ms or less
Isolation method		Photocoupler isolation	Photocoupler isolation	Photocoupler isolation	Photocoupler isolation
Wiring method for common		8 points/common	32 points/common	32 points/common	32 points/common
External interface		38-point terminal block	40-pin connector	40-pin connector	40-pin connector

Model / Specifications		MEMOCON-SC GL Series (2000 Series I/O)	MELSEC-Q series
		JAMSC-B2607 Positive common/negative common shared type	QX71 Positive common/negative common shared type
No. of input points		32	32
Rated input voltage		5/12VDC	5/12VDC
Rated input current		Approx. 11mA (12VDC) Approx. 4mA (5VDC)	Approx. 3.3mA (12VDC) Approx. 1.2mA (5VDC)
Input impedance		Approx. 1.2kΩ	Approx. 3.3kΩ
Inrush current		–	–
Operating voltage/ current	ON	3.5V	3.5V / 1mA
	OFF	1.0V	1V / 0.1mA
Response time	OFF→ON	0.5ms or less	1/5/10/20 /70ms or less
	ON→OFF	0.5ms or less	1/5/10/20 /70ms or less
Isolation method		Photocoupler isolation	Photocoupler isolation
Wiring method for common		8 points/common	32 points/common
External interface		38-point terminal block	40-pin connector

Notes 1. In a case where the number of points per common changes from 8 (four circuits) to 32 and the terminal numbers TB9, TB18, TB27, and TB36 on the MEMOCON-SC GL Series (2000 Series I/O) side are used separately, a wiring change is required.

2. For ▭ areas, check that the specifications of MELSEC-Q series modules satisfy the specifications of devices and equipment to be connected.

3. For detailed specifications and general specifications not described in the specification comparison charts, refer to the user's manual for the module used. Note that the areas where the specifications differ between the MEMOCON-SC GL Series (2000 Series I/O) and the MELSEC-Q series are restricted in terms of specifications during replacement. Verify the specifications of the connected devices.

4. Consider rewiring to the QX81 or QX81-S2 if the existing module uses the 24VDC negative common. Also consider using the ERNT-AQTB38-E in such cases.

5. Consider rewiring to two QX40Hs or two QX80Hs if the existing module uses different power supplies for each 8-point group. Also consider using the ERNT-AQTB20 in such cases.

(4) ERNT-1Y2Q615625 Connector (40P) × 2 → Connector (40P) × 2

Conversion adapter model	MEMOCON-SC GL Series (2000 Series I/O) module model	No. of input points	MELSEC-Q series module model
ERNT-1Y2Q615625	JAMSC-B2615	64	QX42 QX42-S1 QX72
	JAMSC-B2625	64	QX72
	JAMSC-B2605	64	QX42 QX42-S1 QX72

JAMSC-B2615 → QX42/QX42-S1/QX72

JAMSC-B2625 → QX72

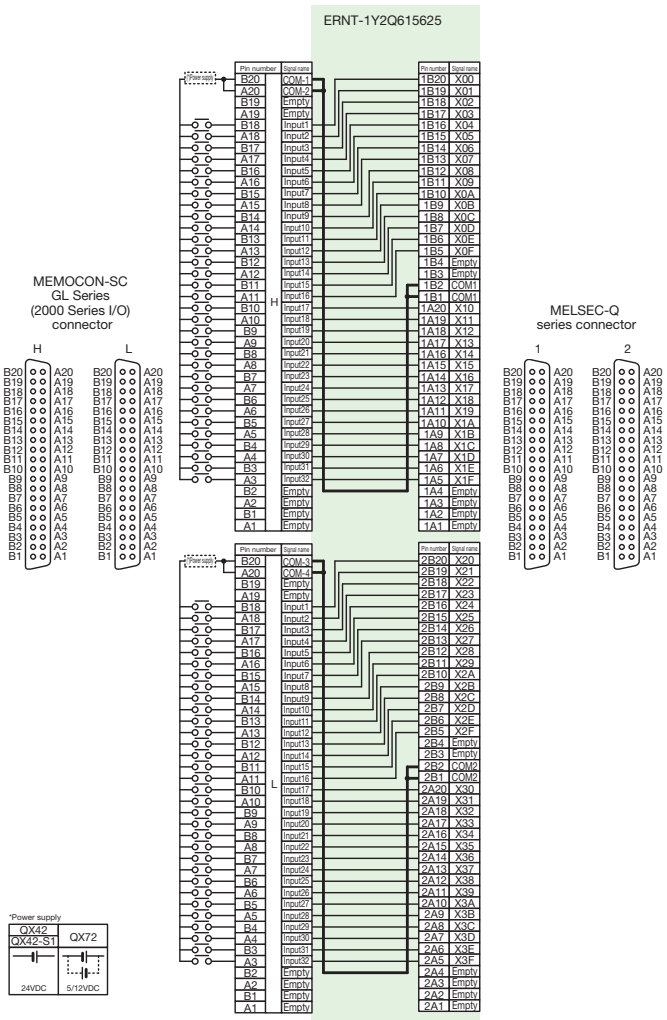

[Specification comparison chart]

Specifications \ Model		MEMOCON-SC GL Series (2000 Series I/O)	MELSEC-Q series		
		JAMSC-B2615 Positive common/negative common shared type	QX42 Positive common type	QX42-S1 Positive common type	QX72 Positive common/negative common shared type
No. of input points		64	64	64	64
Rated input voltage		12/24VDC	24VDC	24VDC	5/12VDC
Rated input current		Approx. 5mA (24VDC) Approx. 2.5mA (12VDC)	Approx. 4mA	Approx. 4mA	Approx. 3.3mA (12VDC) Approx. 1.2mA (5VDC)
Input impedance		Approx. 4.7kΩ	Approx. 5.6kΩ	Approx. 5.6kΩ	Approx. 3.3kΩ
Inrush current		—	—	—	—
Operating voltage/ current	ON	9V	19V / 3mA	19V / 3mA	3.5V / 1mA
	OFF	6V	11V / 1.7mA	9.5V / 1.5mA	1V / 0.1mA
Response time	OFF→ON	5ms or less	1/5/10/20 /70ms or less	0.1/0.2/0.4 /0.6/1ms or less	1/5/10/20 /70ms or less
	ON→OFF	10ms or less	1/5/10/20 /70ms or less	0.1/0.2/0.4 /0.6/1ms or less	1/5/10/20 /70ms or less
Isolation method		Photocoupler isolation	Photocoupler isolation	Photocoupler isolation	Photocoupler isolation
Wiring method for common		16 points/common	32 points/common	32 points/common	32 points/common
External interface		40-pin connector × 2	40-pin connector × 2	40-pin connector × 2	40-pin connector × 2

Specifications \ Model		MEMOCON-SC GL Series (2000 Series I/O)	MELSEC-Q series
		JAMSC-B2625 Positive common/negative common shared type	QX72 Positive common/negative common shared type
No. of input points		64	64
Rated input voltage		5VDC	5/12VDC
Rated input current		Approx. 3.2mA (5VDC)	Approx. 3.3mA (12VDC) Approx. 1.2mA (5VDC)
Input impedance		Approx. 1.5kΩ	Approx. 3.3kΩ
Inrush current		—	—
Operating voltage/ current	ON	3V	3.5V / 1mA
	OFF	2V	1V / 0.1mA
Response time	OFF→ON	1ms or less	1/5/10/20 /70ms or less
	ON→OFF	1ms or less	1/5/10/20 /70ms or less
Isolation method		Photocoupler isolation	Photocoupler isolation
Wiring method for common		16 points/common	32 points/common
External interface		40-pin connector × 2	40-pin connector × 2

Notes
1. In a case where the number of points per common changes from 16 (four circuits) to 32 (two circuits) and the pin numbers A20 and B20 of H and the pin numbers A20 and B20 of L on the MEMOCON-SC GL Series (2000 Series I/O) side are used separately, a wiring change is required.
2. For ▭ areas, check that the specifications of MELSEC-Q series modules satisfy the specifications of devices and equipment to be connected.
3. For detailed specifications and general specifications not described in the specification comparison charts, refer to the user's manual for the module used. Note that the areas where the specifications differ between the MEMOCON-SC GL Series (2000 Series I/O) and the MELSEC-Q series are restricted in terms of specifications during replacement. Verify the specifications of the connected devices.
4. Consider rewiring to two QX81s or two QX81-S2s if the existing module uses the 24VDC negative common.

JAMSC-B2605 → QX42/QX42-S1/QX72

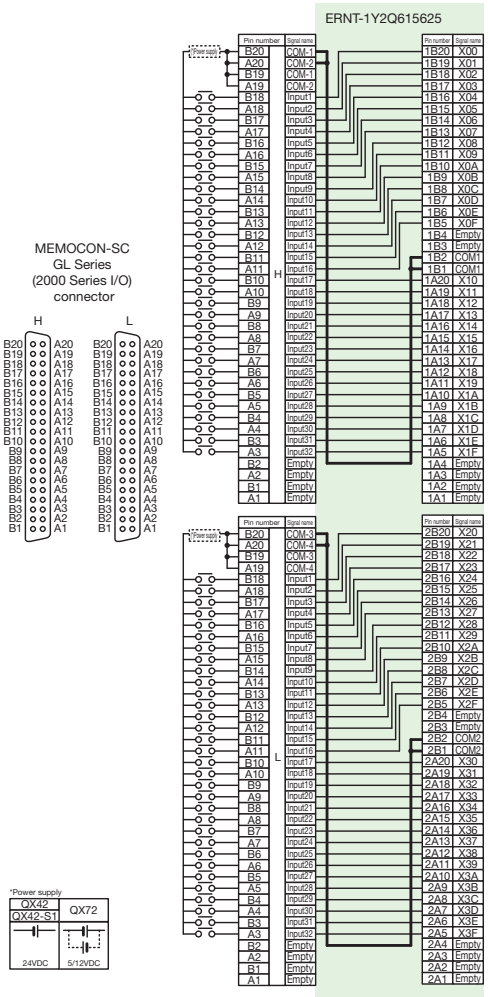

[Specification comparison chart]

Specifications \ Model		MEMOCON-SC GL Series (2000 Series I/O)	MELSEC-Q series		
		JAMSC-B2605 Positive common/negative common shared type	QX42 Positive common type	QX42-S1 Positive common type	QX72 Positive common/negative common shared type
No. of input points		64	64	64	64
Rated input voltage		12/24VDC	24VDC	24VDC	5/12VDC
Rated input current		Approx. 5mA (24VDC) Approx. 2.5mA (12VDC)	Approx. 4mA	Approx. 4mA	Approx. 3.3mA (12VDC) Approx. 1.2mA (5VDC)
Input impedance		Approx. 4.7kΩ	Approx. 5.6kΩ	Approx. 5.6kΩ	Approx. 3.3kΩ
Inrush current		—	—	—	—
Operating voltage/ current	ON	9V	19V / 3mA	19V / 3mA	3.5V / 1mA
	OFF	6V	11V / 1.7mA	9.5V / 1.5mA	1V / 0.1mA
Response time	OFF→ON	5ms or less	1/5/10/20 /70ms or less	0.1/0.2/0.4 /0.6/1ms or less	1/5/10/20 /70ms or less
	ON→OFF	10ms or less	1/5/10/20 /70ms or less	0.1/0.2/0.4 /0.6/1ms or less	1/5/10/20 /70ms or less
Isolation method		Photocoupler isolation	Photocoupler isolation	Photocoupler isolation	Photocoupler isolation
Wiring method for common		16 points/common	32 points/common	32 points/common	32 points/common
External interface		40-pin connector × 2	40-pin connector × 2	40-pin connector × 2	40-pin connector × 2

Notes
1. In a case where the number of points per common changes from 16 (four circuits) to 32 (two circuits) and the pin numbers A20, B20, A19, and B19 of H and the pin numbers A20, B20, A19, and B19 of L on the MEMOCON-SC GL Series (2000 Series I/O) side are used separately, a wiring change is required.
2. For ▭ areas, check that the specifications of MELSEC-Q series modules satisfy the specifications of devices and equipment to be connected.
3. For detailed specifications and general specifications not described in the specification comparison charts, refer to the user's manual for the module used. Note that the areas where the specifications differ between the MEMOCON-SC GL Series (2000 Series I/O) and the MELSEC-Q series are restricted in terms of specifications during replacement. Verify the specifications of the connected devices.
4. Consider rewiring to two QX81s or two QX81-S2s if the existing module uses the 24VDC negative common.

(5) ERNT-1Y2Q500 Terminal block (20P) → Terminal block (18P)

Conversion adapter model	MEMOCON-SC GL Series (2000 Series I/O) module model	No. of output points	MELSEC-Q series module model
ERNT-1Y2Q500	JAMSC-B2500	16	QY22

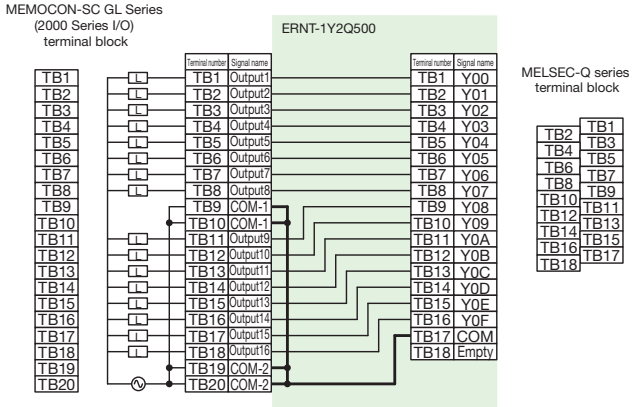

[Specification comparison chart]

Specifications \ Model		MEMOCON-SC GL Series (2000 Series I/O)	MELSEC-Q series
		JAMSC-B2500 Triac output	QY22 Triac output
No. of output points		16	16
Rated load voltage		80-240VAC, 50/60Hz	100-240VAC, 50/60Hz
Maximum load current		1A/point, 3A/common	0.6A/point, 4.8A/common
Minimum load current		10mA	25mA
Maximum inrush current		20A, 10ms or less	20A, one cycle or less
Leakage current at OFF		1.5mA or less (100VAC, 50Hz) 3mA or less (240VAC, 50Hz)	1.5mA or less (120VAC, 60Hz) 3mA or less (240VAC, 60Hz)
Voltage drop at ON		1.5V or less (1A)	1.5V or less
Response time	OFF→ON	1ms or less	1ms + 0.5 cycle or less
	ON→OFF	1ms + 0.5 cycle or less	1ms + 0.5 cycle or less
Surge suppressor		CR absorber/varistor	CR absorber
Fuse		7.5A (not replaceable)	None
Isolation method		Photocoupler isolation	Photocoupler isolation
Wiring method for common		8 points/common	16 points/common
External interface		20-point terminal block	18-point terminal block

Notes
1. In a case where the number of points per common changes from 8 (two circuits) to 16 and the terminal numbers TB9/TB10 and TB19/TB20 on the MEMOCON-SC GL Series (2000 Series I/O) side are used separately, a wiring change is required.
2. For ▭ areas, check that the specifications of MELSEC-Q series modules satisfy the specifications of devices and equipment to be connected.
3. For detailed specifications and general specifications not described in the specification comparison charts, refer to the user's manual for the module used. Note that the areas where the specifications differ between the MEMOCON-SC GL Series (2000 Series I/O) and the MELSEC-Q series are restricted in terms of specifications during replacement. Verify the specifications of the connected devices.

(6) ERNT-1Y2Q600 Terminal block (20P) → Terminal block (18P)

Conversion adapter model	MEMOCON-SC GL Series (2000 Series I/O) module model	No. of output points	MELSEC-Q series module model
ERNT-1Y2Q600	JAMSC-B2600	16	QY40P QY50

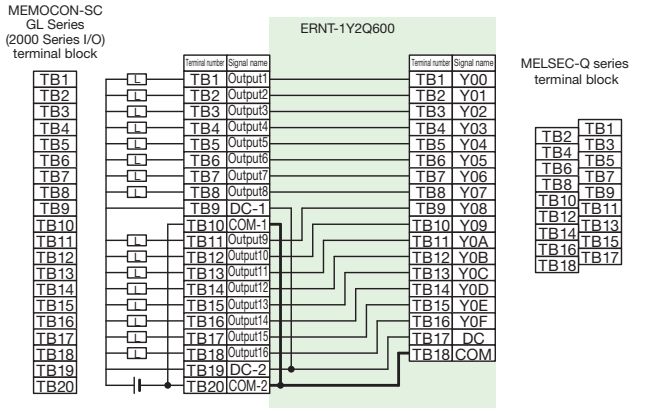

[Specification comparison chart]

Specifications \ Model	MEMOCON-SC GL Series (2000 Series I/O)	MELSEC-Q series	
	JAMSC-B2600 Sink type	QY40P Sink type	QY50 Sink type
No. of output points	16	16	16
Rated load voltage	12/24VDC	12/24VDC	12/24VDC
Maximum load current	2A/point 5A/common	0.1A/point 1.6A/common	0.5A/point 4A/common
Maximum inrush current	7A, 10ms	0.7A, 10ms	4A, 10ms
Leakage current at OFF	0.2mA or less	0.1mA or less	0.1mA or less
Voltage drop at ON	1.5VDC (MAX.), 2A	0.2VDC (MAX.), 0.1A	0.3VDC (MAX.), 0.5A
Response time OFF→ON	1ms or less	1ms or less	1ms or less
Response time ON→OFF	1ms or less (resistive load)	1ms or less (resistive load)	1ms or less (resistive load)
Surge suppressor	Varistor	Zener diode	Zener diode
Fuse	7.5A (not replaceable)	None	6.7A (not replaceable)
Isolation method	Photocoupler isolation	Photocoupler isolation	Photocoupler isolation
Wiring method for common	8 points/common	16 points/common	16 points/common
External interface	20-point terminal block	18-point terminal block	18-point terminal block

Notes
1. In a case where the number of points per common changes from 8 (two circuits) to 16 and the terminal numbers TB9/TB19 and TB10/TB20 on the MEMOCON-SC GL Series (2000 Series I/O) side are used separately, a wiring change is required.
2. For ▭ areas, check that the specifications of MELSEC-Q series modules satisfy the specifications of devices and equipment to be connected.
3. For detailed specifications and general specifications not described in the specification comparison charts, refer to the user's manual for the module used. Note that the areas where the specifications differ between the MEMOCON-SC GL Series (2000 Series I/O) and the MELSEC-Q series are restricted in terms of specifications during replacement. Verify the specifications of the connected devices.

(7) ERNT-1Y2Q602606 Terminal block (38P) → Connector (40P)

Conversion adapter model	MEMOCON-SC GL Series (2000 Series I/O) module model	No. of output points	MELSEC-Q series module model
ERNT-1Y2Q602606	JAMSC-B2602A JAMSC-B2606	32	QY41H

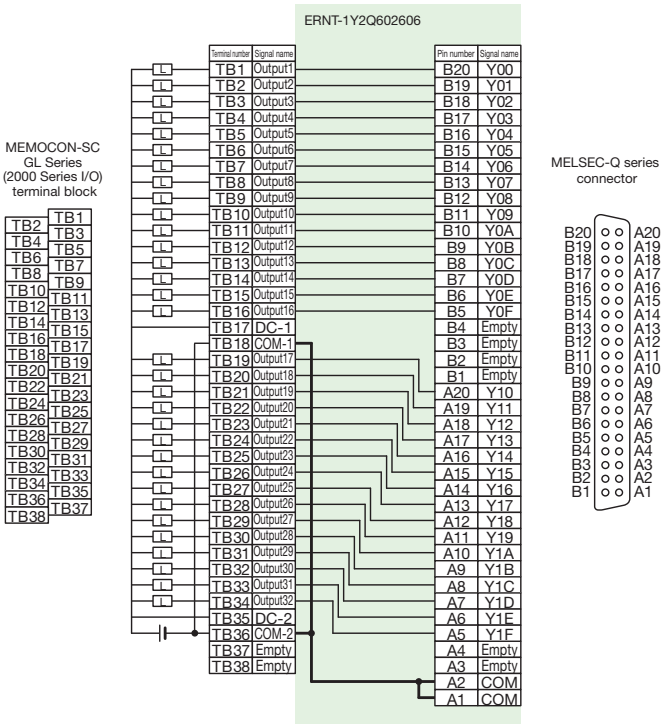

[Specification comparison chart]

Specifications \ Model	MEMOCON-SC GL Series (2000 Series I/O)		MELSEC-Q series
	JAMSC-B2602 Sink type	JAMSC-B2606 Sink type	QY41H Sink type
No. of output points	32	32	32
Rated load voltage	12/24VDC	5/12VDC	5/12/24VDC
Maximum load current	0.3A/point 0.6A/4 adjacent points	20mA/point 640mA/module	0.2A/point 2A/common
Minimum load current	—	—	—
Maximum inrush current	1A, 10ms or less	300mA, 10ms or less	0.7A, 10ms or less
Leakage current at OFF	0.2mA or less	0.2mA or less	0.1mA or less
Voltage drop at ON	1.5VDC (MAX.), 0.3A	0.3VDC (MAX.), 20mA	0.2VDC (MAX.), 0.1A
Response time OFF→ON	1ms or less	1ms or less	2μs or less
Response time ON→OFF	1ms or less (resistive load)	1ms or less (resistive load)	2μs or less (resistive load)
Surge suppressor	None	Zener diode	Zener diode
Fuse	4A (not replaceable)	None	None
Isolation method	Photocoupler isolation	Photocoupler isolation	Photocoupler isolation
Wiring method for common	16 points/common	16 points/common	32 points/common
External interface	38-point terminal block	38-point terminal block	40-pin connector

Notes
1. In a case where the number of points per common changes from 16 (two circuits) to 32 and the terminal numbers TB17/TB35 and TB18/TB36 on the MEMOCON-SC GL Series (2000 Series I/O) side are used separately, a wiring change is required.
2. For ▭ areas, check that the specifications of MELSEC-Q series modules satisfy the specifications of devices and equipment to be connected.
3. For detailed specifications and general specifications not described in the specification comparison charts, refer to the user's manual for the module used. Note that the areas where the specifications differ between the MEMOCON-SC GL Series (2000 Series I/O) and the MELSEC-Q series are restricted in terms of specifications during replacement. Verify the specifications of the connected devices.
4. Consider rewiring to the QY50 (0.5A, 16 points) or QY68A (2A, 8 points) if current capacity is required. Also consider using the ERNT-ASQTB20 in such cases.

(8) ERNT-CQCY213 connector (40P) × 2 → Connector (40P) × 2

Conversion adapter model	MEMOCON-SC GL Series (2000 Series I/O) module model	No. of output points	MELSEC-Q series module model
ERNT-CQCY213*1	JAMSC-B2604	64	QY42P

*1: A conversion adapter for replacing OMRON SYSMAC C series modules with MELSEC-Q series must be used.

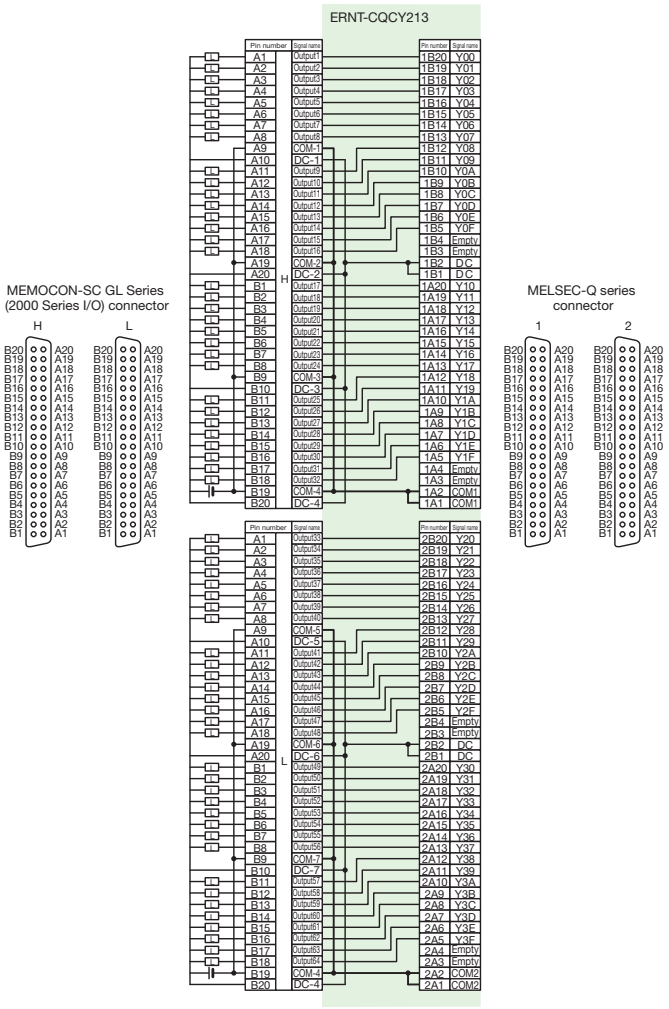

[Specification comparison chart]

Specifications \ Model		MEMOCON-SC GL Series (2000 Series I/O)	MELSEC-Q series
		JAMSC-B2604	QY42P
No. of output points		64	64
Rated load voltage		12/24VDC	12/24VDC
Maximum load current		0.1A/point, 0.4A/common	0.1A/point, 2A/common
Maximum inrush current		0.5A, 10ms or less	0.7A, 10ms or less
Leakage current at OFF		0.2mA or less	0.1mA or less
Response time	OFF→ON	1ms or less	1ms or less
	ON→OFF	1ms or less (resistive load)	1ms or less (resistive load)
Surge suppressor		None	Zener diode
Fuse		None	None
Isolation method		Photocoupler isolation	Photocoupler isolation
Wiring method for common		8 points/common	32 points/common
External interface		40-pin connector × 2	40-pin connector × 2

Notes

1. In a case where the number of points per common changes from 8 (eight circuits) to 32 (two circuits) and the pin numbers A9, A10, A19, A20, B9, B10, B19, and B20 of H and the pin numbers A9, A10, A19, A20, B9, B10, B19, and B20 of L on the MEMOCON-SC GL Series (2000 Series I/O) side are used separately, a wiring change is required
2. For ▭ areas, check that the specifications of MELSEC-Q series modules satisfy the specifications of devices and equipment to be connected.
3. For detailed specifications and general specifications not described in the specification comparison charts, refer to the user's manual for the module used. Note that the areas where the specifications differ between the MEMOCON-SC GL Series (2000 Series I/O) and the MELSEC-Q series are restricted in terms of specifications during replacement. Verify the specifications of the connected devices.

[2-slot type] (Not applicable to MELSEC-Q series large type base units (Q□□BL))

(1) ERNT-1Y2Q505 Terminal block (38P) → Terminal block (18P) × 2

Conversion adapter model	MEMOCON-SC GL Series (2000 Series I/O) module model	No. of input points	MELSEC-Q series module model	No. of required modules
ERNT-1Y2Q505	JAMSC-B2505A	32	QX10	2

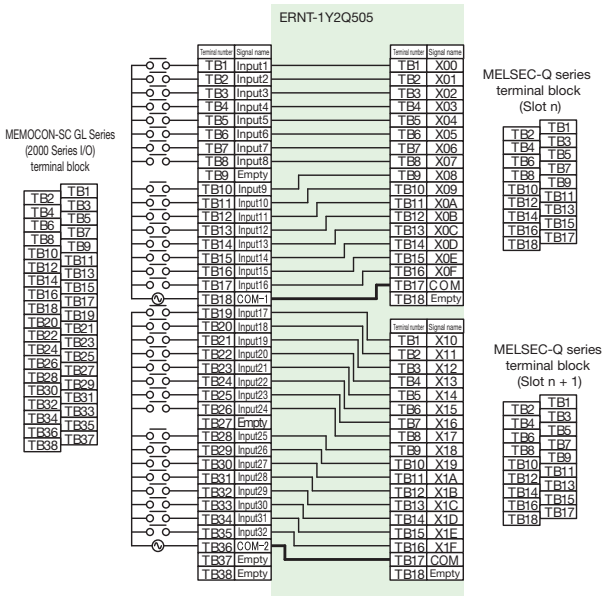

[Specification comparison chart]

Specifications \ Model		MEMOCON-SC GL Series (2000 Series I/O) JAMSC-B2505A	MELSEC-Q series QX10
No. of input points		32	16
Rated input voltage		100-120VAC, 50/60Hz	100-120VAC, 50/60Hz
Rated input current		Approx. 10mA (100VAC, 60Hz)	Approx. 8mA (100VAC, 60Hz) Approx. 7mA (100VAC, 50Hz)
Input impedance		Approx. 10kΩ (60Hz)	Approx. 12kΩ (60Hz) Approx. 15kΩ (50Hz)
Inrush current		–	Max. 200mA 1ms (132VAC)
Operating voltage/ current	ON	–	80VAC / 5mA
	OFF	–	30VAC / 1.7mA
Response time	OFF→ON	15ms or less	15ms or less
	ON→OFF	25ms or less	20ms or less
Isolation method		Photocoupler isolation	Photocoupler isolation
Wiring method for common		16 points/common	16 points/common
External interface		38-point terminal block	18-point terminal block

Notes 1.For ▭ areas, check that the specifications of MELSEC-Q series modules satisfy the specifications of devices and equipment to be connected.
2.For detailed specifications and general specifications not described in the specification comparison charts, refer to the user's manual for the module used. Note that the areas where the specifications differ between the MEMOCON-SC GL Series (2000 Series I/O) and the MELSEC-Q series are restricted in terms of specifications during replacement. Verify the specifications of the connected devices.

(2) ERNT-1JQ33S Terminal block (38P) → Terminal block (18P) × 2

Conversion adapter model	MEMOCON-SC GL Series (2000 Series I/O) module model	No. of output points	MELSEC-Q series module model	No. of required modules
ERNT-1JQ33S*1	JAMSC-B2504	32	QY22	2

*1: A conversion adapter for replacing SHARP JW Series modules (large type) with MELSEC-Q series must be used.

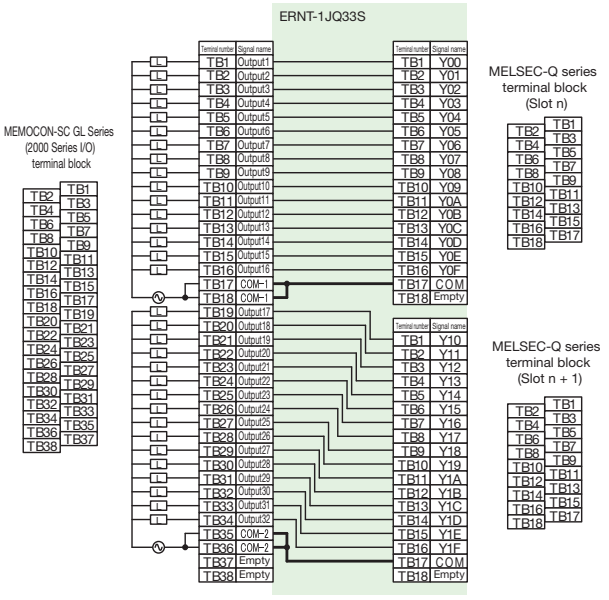

[Specification comparison chart]

Specifications \ Model		MEMOCON-SC GL Series (2000 Series I/O) JAMSC-B2504 Triac output	MELSEC-Q series QY22 Triac output
No. of output points		32	16
Rated load voltage		80-240VAC, 50/60Hz	100-240VAC, 50/60Hz
Maximum load current		0.3A/point, 1.2A/common	0.6A/point, 4.8A/common
Minimum load current		10mA	25mA
Maximum inrush current		20A, 10ms or less	20A, one cycle or less
Leakage current at OFF		1.5mA or less (100VAC, 60Hz) 3mA or less (240VAC, 60Hz)	1.5mA or less (120VAC, 60Hz) 3mA or less (240VAC, 60Hz)
Voltage drop at ON		1.5V or less (1A)	1.5V or less
Response time	OFF→ON	1ms or less	1ms + 0.5 cycle or less
	ON→OFF	1ms + 0.5 cycle or less	1ms + 0.5 cycle or less
Surge suppressor		CR absorber	CR absorber
Fuse		4A (not replaceable)	None
Isolation method		Photocoupler isolation	Photocoupler isolation
Wiring method for common		16 points/common	16 points/common
External interface		38-point terminal block	18-point terminal block

Notes 1.For ▭ areas, check that the specifications of MELSEC-Q series modules satisfy the specifications of devices and equipment to be connected.
2.For detailed specifications and general specifications not described in the specification comparison charts, refer to the user's manual for the module used. Note that the areas where the specifications differ between the MEMOCON-SC GL Series (2000 Series I/O) and the MELSEC-Q series are restricted in terms of specifications during replacement. Verify the specifications of the connected devices.

(3) ERNT-1JQ31N34S Terminal block (38P) → Terminal block (18P) × 2

Conversion adapter model	MEMOCON-SC GL Series (2000 Series I/O) module model	No. of output points	MELSEC-Q series module model	No. of required modules
ERNT-1JQ31N34S*1	JAMSC-B2902	32	QY10	2

*1: A conversion adapter for replacing SHARP JW Series modules (large type) with MELSEC-Q series must be used.

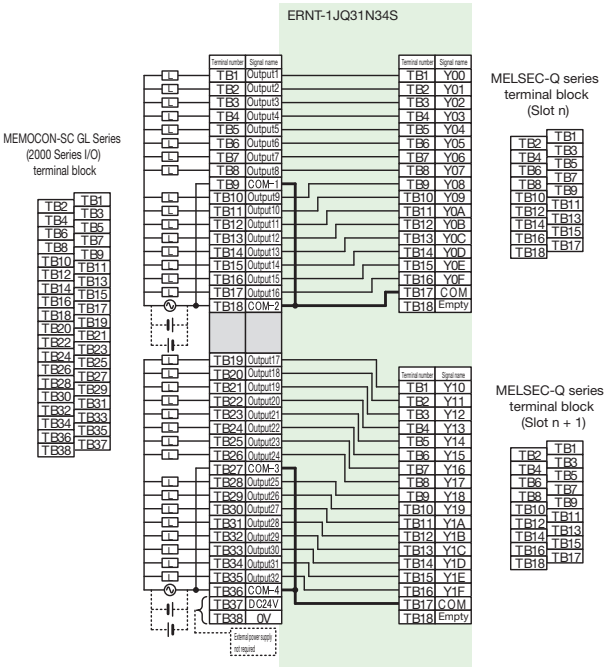

[Specification comparison chart]

Specifications \ Model	MEMOCON-SC GL Series (2000 Series I/O)	MELSEC-Q series
	JAMSC-B2902	QY10
No. of output points	32	16
Rated load voltage	24VDC / 110VAC / 220VAC	24VDC / 240VAC
Maximum load current	1.2A (110VAC) 1A (220VAC) 1A (24VDC)	2A/point 8A/common
Minimum load current	10mA (5VDC)	1mA (5VDC)
Maximum inrush current	–	–
Leakage current at OFF	–	–
Voltage drop at ON	–	–
Response time OFF→ON	10ms or less	10ms or less
Response time ON→OFF	15ms or less	12ms or less
Surge suppressor	None	None
Fuse	None	None
Isolation method	Relay isolation	Relay isolation
Wiring method for common	8 points/common	16 points/common
External interface	38-point terminal block	18-point terminal block

Notes 1. In a case where the number of points per common changes from 8 (four circuits) to 16 (two circuits) and the terminal numbers TB9/TB18 and TB27/TB36 on the MEMOCON-SC GL Series (2000 Series I/O) side are used separately, a wiring change is required.
2. The external power supply connected to the terminal numbers TB37 and TB38 on the MEMOCON-SC GL Series (2000 Series I/O) side is no longer required. Such devices may remain connected though as the conversion adapter is not wired internally for this connection.
3. For ▭ areas, check that the specifications of MELSEC-Q series modules satisfy the specifications of devices and equipment to be connected.
4. For detailed specifications and general specifications not described in the specification comparison charts, refer to the user's manual for the module used. Note that the areas where the specifications differ between the MEMOCON-SC GL Series (2000 Series I/O) and the MELSEC-Q series are restricted in terms of specifications during replacement. Verify the specifications of the connected devices.

(4) ERNT-1Y2Q904914 Terminal block (38P) → Terminal block (18P) × 2

Conversion adapter model	MEMOCON-SC GL Series (2000 Series I/O) module model	No. of output points	MELSEC-Q series module model	No. of required modules
ERNT-1Y2Q904914	JAMSC-B2904 JAMSC-B2914	16	QY18A	2

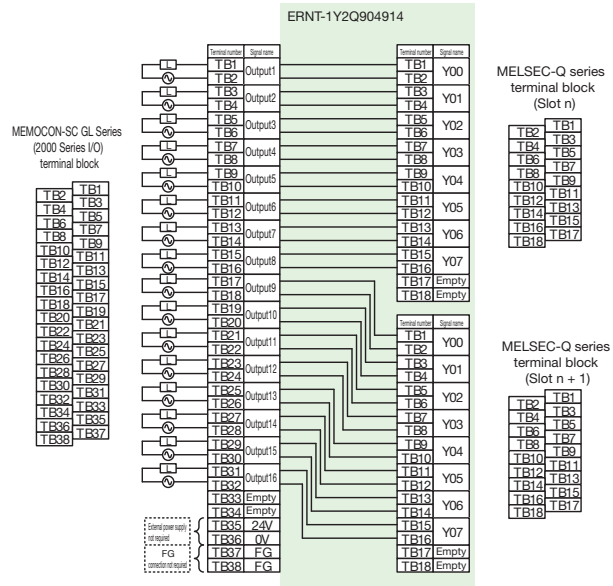

[Specification comparison chart]

Specifications \ Model	MEMOCON-SC GL Series (2000 Series I/O)		MELSEC-Q series
	JAMSC-B2904	JAMSC-B2914	QY18A
No. of output points	16	16	8
Rated switching voltage/current	110VDC, 0.3A 220VAC, 0.5A	110VDC, 0.3A 220VAC, 0.5A	24VDC, 2A (resistive load)/point 240VAC, 2A (COSΦ= 1)/point 8A/module
Minimum switching load	5VDC, 1mA	24VDC, 10mA	5VDC, 1mA
Maximum switching load	110VDC, 0.5A 220VAC, 15A	110VDC, 0.5A 220VAC, 15A	125VDC 264VAC
Response time OFF→ON	6ms or less	6ms or less	10ms or less
Response time ON→OFF	4ms or less	4ms or less	12ms or less
Surge suppressor	None	None	None
Fuse	None	None	None
Isolation method	Relay isolation	Relay isolation	Relay isolation
Wiring method for common	Independent common	Independent common	Independent common
External interface	38-point terminal block	38-point terminal block	18-point terminal block

Notes 1. The external power supply connected to the terminal numbers TB35 and TB36 on the MEMOCON-SC GL Series (2000 Series I/O) side is no longer required. Such devices may remain connected though as the conversion adapter is not wired internally for this connection.
2. The FG terminal connected to the terminal numbers TB37 and TB38 on the MEMOCON-SC GL Series (2000 Series I/O) side is no longer required. Such devices may remain connected though as the conversion adapter is not wired internally for this connection.
3. For ▭ areas, check that the specifications of MELSEC-Q series modules satisfy the specifications of devices and equipment to be connected.
4. For detailed specifications and general specifications not described in the specification comparison charts, refer to the user's manual for the module used. Note that the areas where the specifications differ between the MEMOCON-SC GL Series (2000 Series I/O) and the MELSEC-Q series are restricted in terms of specifications during replacement. Verify the specifications of the connected devices.

Conversion Adapter Support Flange (Required)

Specifications

A conversion adapter support flange secures the bottom of a conversion adapter.
This is required when a conversion adapter is used. One support flange is required per base unit.
The same support flange used to replace MELSEC-A series with MELSEC-Q series is used.

Conversion adapter support flange model	Specifications
ERNT-AQF12	Conversion adapter support flange for 12 slots of MELSEC-Q series modules
ERNT-AQF8	Conversion adapter support flange for 8 slots of MELSEC-Q series modules
ERNT-AQF5	Conversion adapter support flange for 5 slots of MELSEC-Q series modules
ERNT-AQF3	Conversion adapter support flange for 3 slots of MELSEC-Q series modules

When using a main base unit

● **Q312B, Q38B, Q35B, Q33B**

Unit: mm

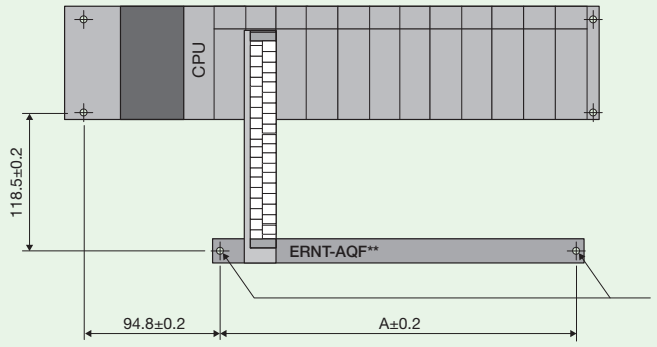

Conversion adapter support flange	A (mm)
ERNT-AQF12	321.2
ERNT-AQF8	210
ERNT-AQF5	126.6
ERNT-AQF3	71

Drill screw holes (M4 screw, 2 locations) at these positions, and install the conversion adapter support flange.

When using an extension base unit

● **Q612B, Q68B, Q65B, Q63B**

Unit: mm

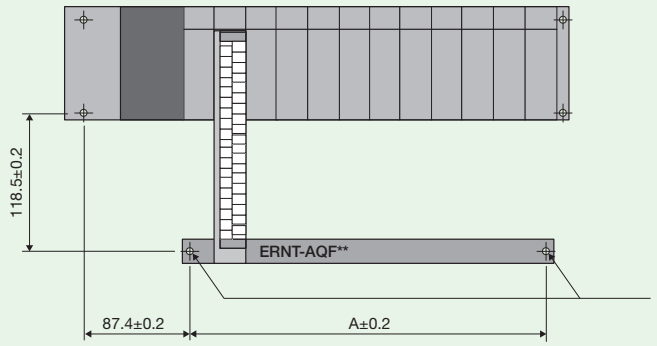

Conversion adapter support flange	A (mm)
ERNT-AQF12	321.2
ERNT-AQF8	210
ERNT-AQF5	126.6
ERNT-AQF3	71

Drill screw holes (M4 screw, 2 locations) at these positions, and install the conversion adapter support flange.

● **Q55B**

Unit: mm

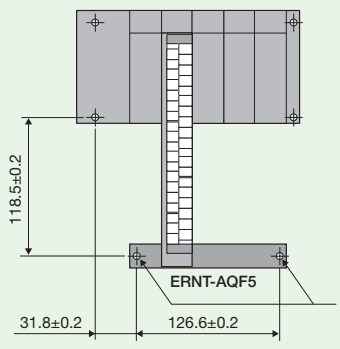

Drill screw holes (M4 screw, 2 locations) at these positions, and install the conversion adapter support flange.

● **Q52B**

Unit: mm

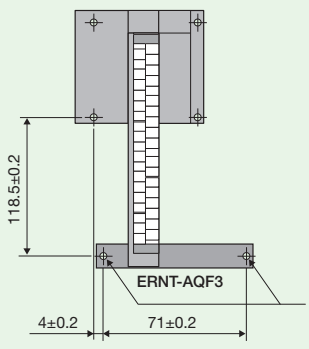

Drill screw holes (M4 screw, 2 locations) at these positions, and install the conversion adapter support flange.

Memo

Upgrading Using the Base Adapter or the Q Series Large Type Base Unit (Manufactured by Mitsubishi Electric)

Using the base adapter or the Q series large type base unit eliminates the need to drill mounting holes and determine installation position of the support flange.

When the base adapter or the Q series large type base unit is not used

Six or seven new mounting holes are required and the installation positions of the Q series base unit and the support flange need to be determined.

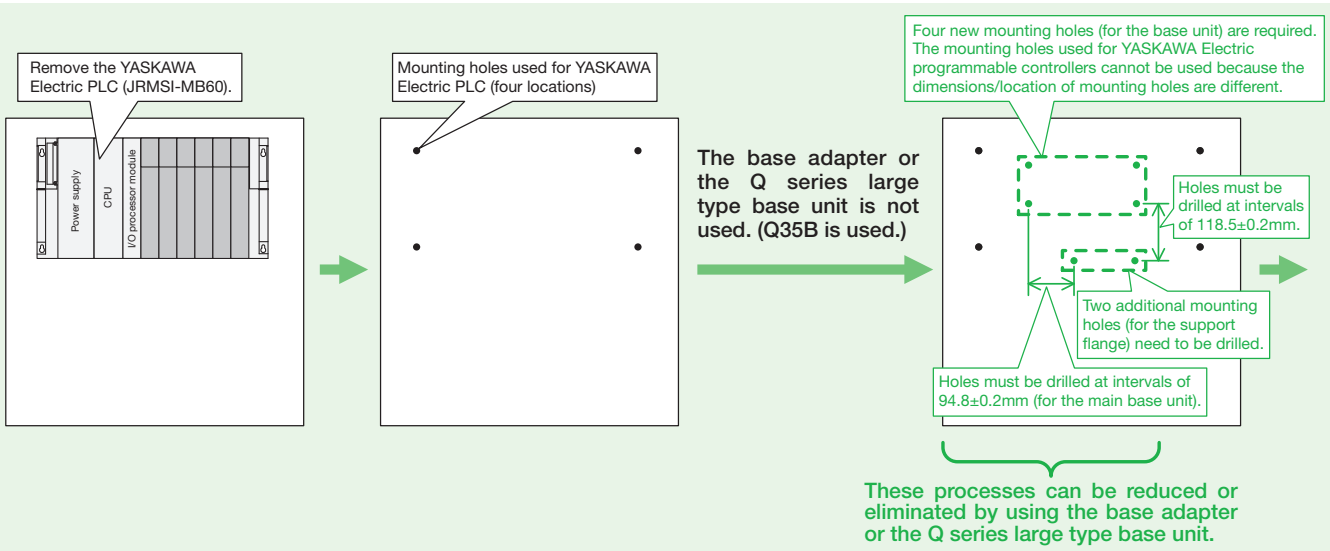

When the base adapter or the Q series large type base unit (the same one used to replace MELSEC-A series large type with MELSEC-Q series) is used

Only a maximum of 2 holes must be drilled due to the base adapter or Q series large type base unit having the same mounting hole height dimensions as the GL Series base unit. (Additional mounting holes are not required if the mounting dimensions before and after replacement are the same and the existing four mounting holes can be used.)

The following figure shows the installation when two existing mounting holes on the left are used.

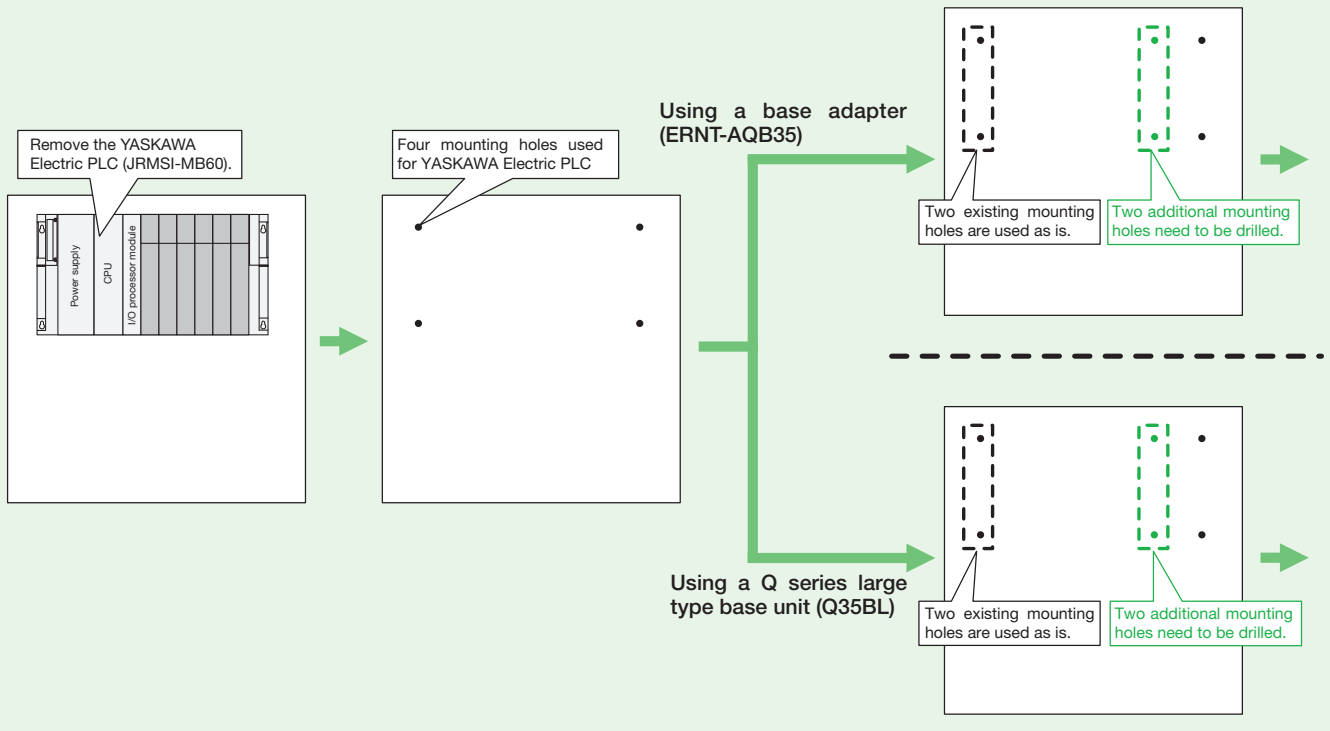

For details, refer to "Mounting Dimensions" on page 6-18, "Comparison of External Dimensions and Mounting Hole Dimensions for Replacements" on page 6-19, and "Slot Positions" on page 6-21.

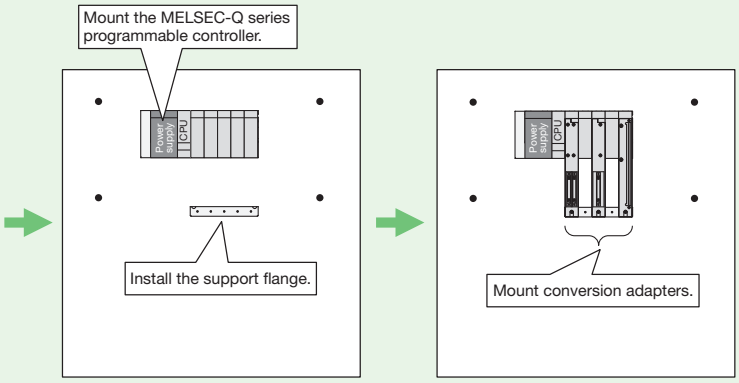
Mount the MELSEC-Q series programmable controller.
Power supply
CPU
Install the support flange.
Power supply
CPU
Mount conversion adapters.

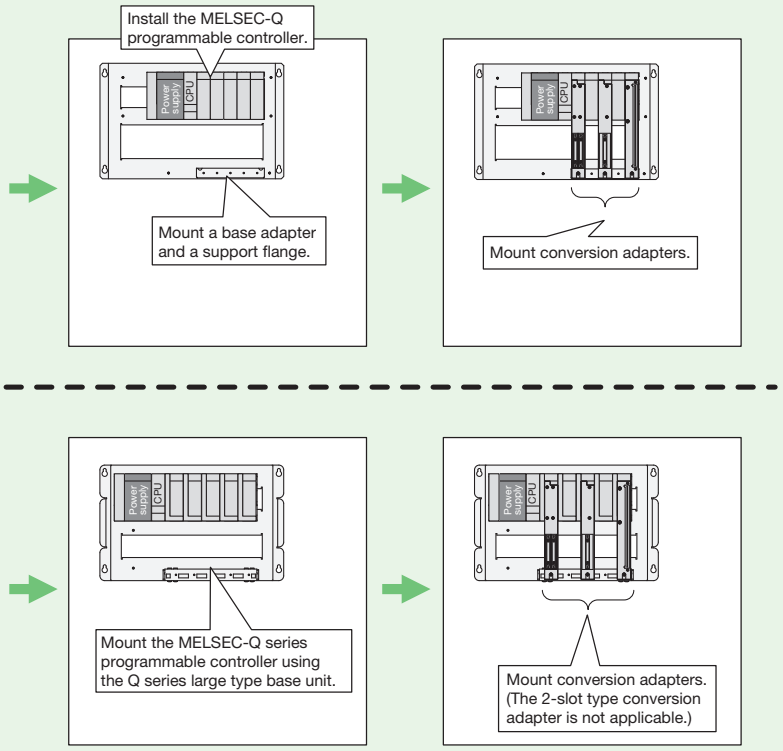
Install the MELSEC-Q programmable controller.
Power supply
CPU
Mount a base adapter and a support flange.
Power supply
CPU
Mount conversion adapters.
Power supply
CPU
Mount the MELSEC-Q series programmable controller using the Q series large type base unit.
Power supply
CPU
Mount conversion adapters. (The 2-slot type conversion adapter is not applicable.)

Base Adapter

Specifications

Both the MELSEC-Q series base unit and the conversion adapter support flange can be installed on the base adapter without drilling screw holes.
The same base adapter used to replace MELSEC-A series with MELSEC-Q series is used.

Note
- Two additional mounting holes (M5 screw) and four M5 screws need to be prepared by the user to install the base adapter to the control panel. (Additional mounting holes are not required if the mounting dimensions before and after replacement are the same and the existing four mounting holes can be used.)

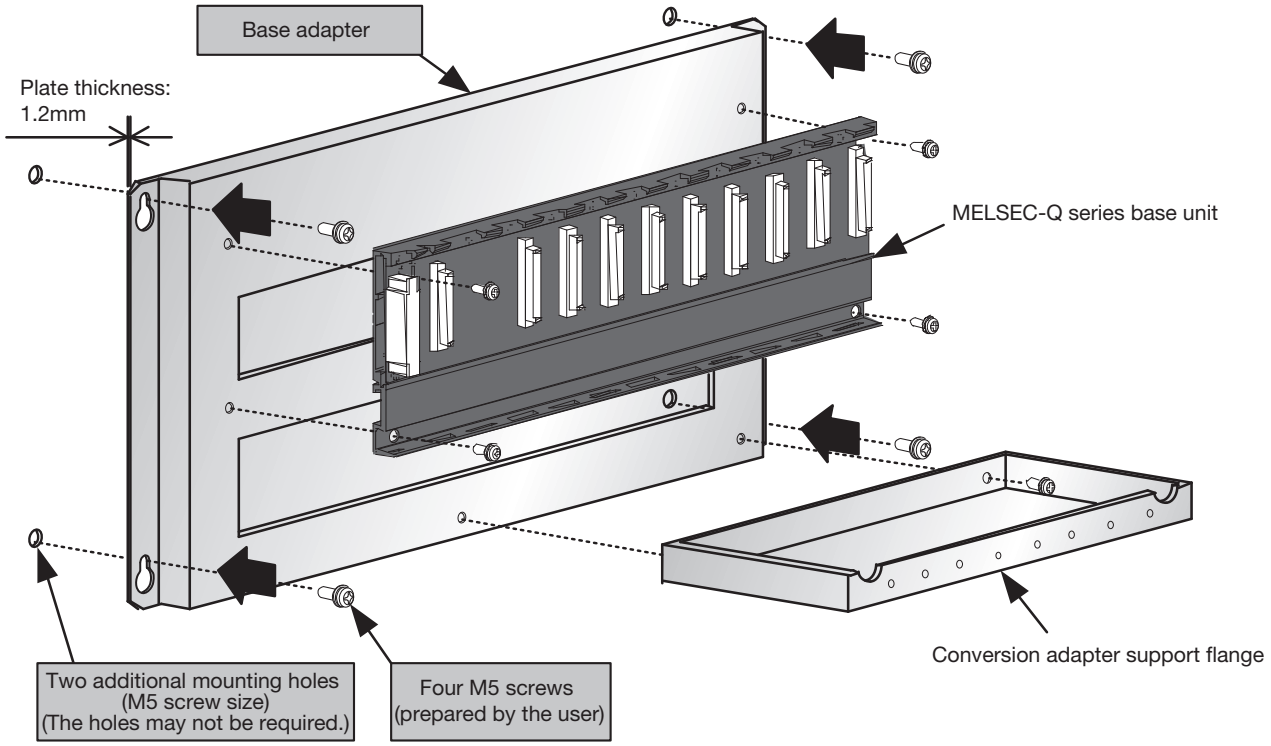

For the base unit models marked with *1 to *5, two or more base adapter models are applicable. Select the most suitable base adapter according to the product dimensions.

Base adapter model	Mountable product						Product dimensions
	MELSEC-Q series base unit					Conversion adapter support flange	Width × Height (mm)
	12 slots	8 slots	5 slots	3 slots	2 slots		
ERNT-AQB38	Q312B					ERNT-AQF12, ERNT-AQF8	480 × 240
		Q38B (*1)				ERNT-AQF8	
ERNT-AQB35		Q38B (*1)				ERNT-AQF8, ERNT-AQF5	382 × 240
			Q35B			ERNT-AQF5	
ERNT-AQB32				Q33B		ERNT-AQF3	247 × 240
ERNT-AQB68	Q612B					ERNT-AQF12, ERNT-AQF8	466 × 240
		Q68B (*2)				ERNT-AQF8	
ERNT-AQB65		Q68B (*2)				ERNT-AQF8, ERNT-AQF5	352 × 240
			Q65B (*3) Q55B (*4)			ERNT-AQF5	
ERNT-AQB62				Q63B	Q52B (*5)	ERNT-AQF3	238 × 240
ERNT-AQB58		Q68B (*2)				ERNT-AQF8	411 × 240
ERNT-AQB55			Q65B (*3) Q55B (*4)			ERNT-AQF5	297 × 240
ERNT-AQB52					Q52B (*5)	ERNT-AQF3	183 × 240

Mounting Dimensions

- The slot positions of modules differ between the MEMOCON-SC GL Series (2000 Series I/O) and the MELSEC-Q series. After replacement, adjust the length of cables.
- The height will be smaller after replacement.
  (For the width and depth, refer to "Usage Precautions" on page 6-28.)
- Two of the four mounting holes of the base adapter and the Q series large type base unit are the same size as those of the MEMOCON-SC GL Series (2000 Series I/O) base unit, and therefore only two additional mounting holes need to be drilled on the control panel. (Additional mounting holes are not required if the mounting dimensions are the same before and after replacement and the existing four mounting holes can be used.)

● Base adapter + MELSEC-Q series base unit

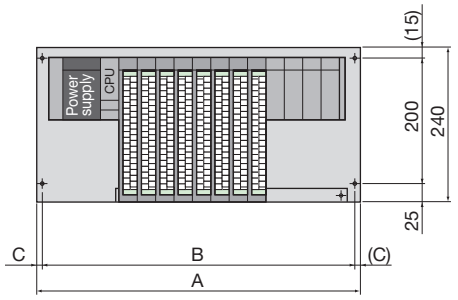

● Q series large type base unit

Unit: mm

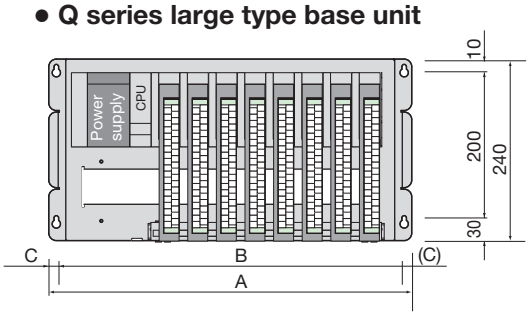

Base adapter model	Description	A	B	C	Mounting hole size
ERNT-AQB38	Main base unit	480	460	10	M5
ERNT-AQB35		382	362	10	
ERNT-AQB32		247	227	10	
ERNT-AQB68	Extension base unit with power supply	466	446	10	
ERNT-AQB65		352	332	10	
ERNT-AQB62		238	218	10	
ERNT-AQB55	Extension base unit without power supply	297	277	10	
ERNT-AQB52		183	163	10	

Q series large type base unit model	Description	A	B	C	Mounting hole size
Q38BL	Main base unit	480	460	10	M5
Q35BL		382	362	10	
Q68BL	Extension base unit with power supply	466	446	10	
Q65BL		352	332	10	
Q55BL	Extension base unit without power supply	297	277	10	

● (Reference) MEMOCON-SC GL Series (2000 Series I/O) base unit

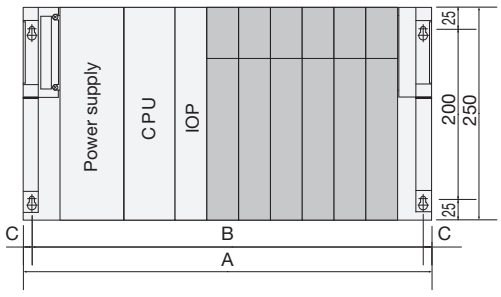

GL Series base unit model	Description	A	B	C	Mounting hole size
JRMSI-MB40	Main base unit	480	460	10	M5
JRMSI-MB60		480	460	10	
JRMSI-MB60S3		370	350	10	
JRMSI-MB70	Main base unit (for remote station)	480	460	10	
JRMSI-MB70AS4		340	320	10	
JRMSI-MB70AS2		255	235	10	
JRMSI-MB22 / JRMSI-MB22A	Extension base unit	480	460	10	
JRMSI-MB22AS6		370	350	10	
JRMSI-MB22S5		340	320	10	
JRMSI-MB22S3		255	235	10	

Comparison of External Dimensions and Mounting Hole Dimensions for Replacements

Use the following tables to check the differences of external dimensions and mounting hole dimensions before and after replacement.

Notes

- "▲" indicates that the dimensions will be larger after replacement as shown in the example below. Reconsider the installation position.
- If there are not enough mounting slots, use an extension base unit.
- If your MEMOCON-SC GL Series (2000 Series I/O) model is not listed here, check the number of slots, external dimensions, mounting dimensions, and other specifications and then select the optimal base adapter or Q series large type base unit.

Example) Replacing the MEMOCON-SC GL Series (2000 Series I/O) (JRMSI-MB60S3) with the MELSEC-Q series large type base unit (Q35BL)

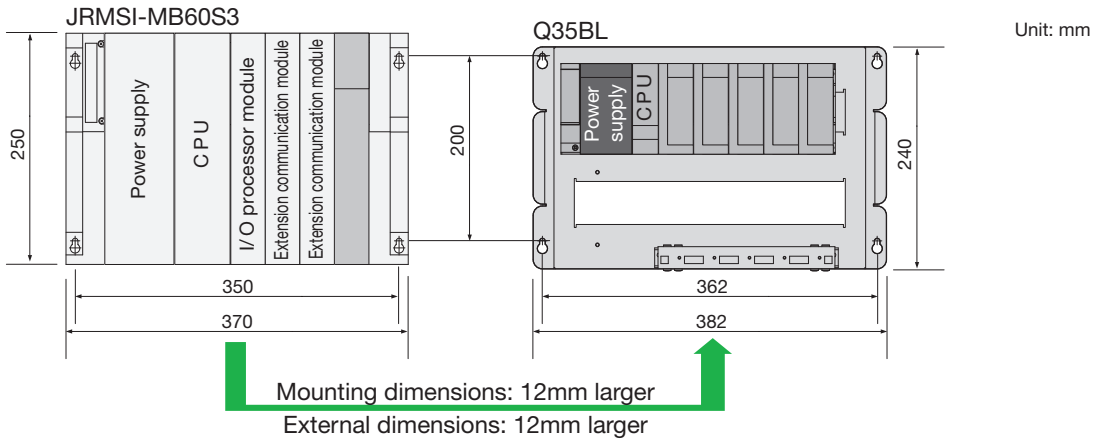

Unit: mm

When using a main base unit

1. Replacing with the MELSEC-Q series base unit or MELSEC-Q series base unit + base adapter

◎: Same, ○: GL Series is larger, ▲: GL Series is smaller

GL Series base unit			MELSEC-Q series base unit								Base adapter					Conversion adapter support flange	Remarks
Model	Includes power supply	Maximum number of slots	Model	Includes power supply	Maximum number of slots	Comparison*1 (MELSEC-Q series - GL Series) External dimensions Width	Height	Mounting dimensions Width	Height		Model	Comparison*2 (Base adapter - GL Series) External dimensions Width	Height	Mounting dimensions Width	Height		
JRMSI-MB40	Yes	8	Q312B	Yes	12	○ (-41)	○ (-152)	○ (-41)	○ (-120)		ERNT-AQB38	◎	○ (-10)	◎	◎	ERNT-AQF12	·Drill mounting holes in panel surface not required when using the base adapter
			Q38B	Yes	8	○ (-152)	○ (-152)	○ (-152)	○ (-120)		ERNT-AQB38	◎	○ (-10)	◎	◎	ERNT-AQF8	·Drill mounting holes in panel surface not required when using the base adapter
			Q35B	Yes	5	○ (-235)	○ (-152)	○ (-235.6)	○ (-120)		ERNT-AQB35	○ (-98)	○ (-10)	○ (-98)	◎	ERNT-AQF5	·Drill mounting holes in panel surface required except for 2 vertical holes when using the base adapter
			Q33B	Yes	3	○ (-291)	○ (-152)	○ (-291)	○ (-120)		ERNT-AQB32	○ (-233)	○ (-10)	○ (-233)	◎	ERNT-AQF3	·Drill mounting holes in panel surface required except for 2 vertical holes when using the base adapter
JRMSI-MB60	Yes	6	Q312B	Yes	12	○ (-41)	○ (-152)	○ (-41)	○ (-120)		ERNT-AQB38	◎	○ (-10)	◎	◎	ERNT-AQF12	·Drill mounting holes in panel surface not required when using the base adapter
			Q38B	Yes	8	○ (-152)	○ (-152)	○ (-152)	○ (-120)		ERNT-AQB38	◎	○ (-10)	◎	◎	ERNT-AQF8	·Drill mounting holes in panel surface not required when using the base adapter
			Q35B	Yes	5	○ (-235)	○ (-152)	○ (-235.6)	○ (-120)		ERNT-AQB35	○ (-98)	○ (-10)	○ (-98)	◎	ERNT-AQF5	·Drill mounting holes in panel surface required except for 2 vertical holes when using the base adapter
			Q33B	Yes	3	○ (-291)	○ (-152)	○ (-291)	○ (-120)		ERNT-AQB32	○ (-233)	○ (-10)	○ (-233)	◎	ERNT-AQF3	·Drill mounting holes in panel surface required except for 2 vertical holes when using the base adapter
JRMSI-MB60S3	Yes	1	Q33B	Yes	3	○ (-181)	○ (-152)	○ (-181)	○ (-120)		ERNT-AQB32	○ (-123)	○ (-10)	○ (-123)	◎	ERNT-AQF3	·Drill mounting holes in panel surface required except for 2 vertical holes when using the base adapter
JRMSI-MB70	Yes	8	Q312B	Yes	12	○ (-41)	○ (-152)	○ (-41)	○ (-120)		ERNT-AQB38	◎	○ (-10)	◎	◎	ERNT-AQF12	·Drill mounting holes in panel surface not required when using the base adapter
			Q38B	Yes	8	○ (-152)	○ (-152)	○ (-152)	○ (-120)		ERNT-AQB38	◎	○ (-10)	◎	◎	ERNT-AQF8	·Drill mounting holes in panel surface not required when using the base adapter
			Q35B	Yes	5	○ (-235)	○ (-152)	○ (-235.6)	○ (-120)		ERNT-AQB35	○ (-98)	○ (-10)	○ (-98)	◎	ERNT-AQF5	·Drill mounting holes in panel surface required except for 2 vertical holes when using the base adapter
			Q33B	Yes	3	○ (-291)	○ (-152)	○ (-291)	○ (-120)		ERNT-AQB32	○ (-233)	○ (-10)	○ (-233)	◎	ERNT-AQF3	·Drill mounting holes in panel surface required except for 2 vertical holes when using the base adapter
JRMSI-MB70AS4	Yes	4	Q312B	Yes	12	▲ (99)	○ (-152)	▲ (99)	○ (-120)		ERNT-AQB38	▲ (140)	○ (-10)	▲ (140)	◎	ERNT-AQF12	·Drill mounting holes in panel surface required except for 2 vertical holes when using the base adapter
			Q38B	Yes	8	○ (-12)	○ (-152)	○ (-12)	○ (-120)		ERNT-AQB38	▲ (140)	○ (-10)	▲ (140)	◎	ERNT-AQF8	·Drill mounting holes in panel surface required except for 2 vertical holes when using the base adapter
			Q35B	Yes	5	○ (-95)	○ (-152)	○ (-95.6)	○ (-120)		ERNT-AQB35	▲ (42)	○ (-10)	▲ (42)	◎	ERNT-AQF5	·Drill mounting holes in panel surface required except for 2 vertical holes when using the base adapter
			Q33B	Yes	3	○ (-151)	○ (-152)	○ (-151)	○ (-120)		ERNT-AQB32	▲ (-93)	○ (-10)	○ (-93)	◎	ERNT-AQF3	·Drill mounting holes in panel surface required except for 2 vertical holes when using the base adapter
JRMSI-MB70AS2	Yes	2	Q35B	Yes	5	○ (-10)	○ (-152)	○ (-10.6)	○ (-120)		ERNT-AQB35	▲ (127)	○ (-10)	▲ (127)	◎	ERNT-AQF3	·Drill mounting holes in panel surface required except for 2 vertical holes when using the base adapter
			Q33B	Yes	3	○ (-66)	○ (-152)	○ (-66)	○ (-120)		ERNT-AQB32	○ (-8)	○ (-10)	○ (-8)	◎	ERNT-AQF3	·Drill mounting holes in panel surface required except for 2 vertical holes when using the base adapter

*1: Values in parentheses indicate differences in dimensions (unit: mm) between the MELSEC-Q series base unit and GL Series modules.
*2: Values in parentheses indicate differences in dimensions (unit: mm) between the base adapter and GL Series modules.

2. Replacing with the MELSEC-Q series large type base unit

◎: Same, ○: GL Series is larger, ▲: GL Series is smaller

GL Series base unit			MELSEC-Q series large type base unit							Remarks
Model	Includes power supply	Maximum number of slots	Model	Includes power supply	Maximum number of slots	Comparison*1 (MELSEC-Q series - GL Series)				
						External dimensions		Mounting dimensions		
						Width	Height	Width	Height	
JRMSI-MB40	Yes	8	Q38BL	Yes	8	◎	○ (-10)	◎	◎	·Drill mounting holes in panel surface not required
			Q35BL	Yes	5	○ (-98)	○ (-10)	○ (-98)	◎	·Drill mounting holes in panel surface required except for 2 vertical holes
JRMSI-MB60	Yes	6	Q38BL	Yes	8	◎	○ (-10)	◎	◎	·Drill mounting holes in panel surface not required
			Q35BL	Yes	5	○ (-98)	○ (-10)	○ (-98)	◎	·Drill mounting holes in panel surface required except for 2 vertical holes
JRMSI-MB60S3	Yes	1	Q35BL	Yes	5	▲ (12)	○ (-10)	▲ (12)	◎	·Drill mounting holes in panel surface required except for 2 vertical holes
JRMSI-MB70	Yes	8	Q38BL	Yes	8	◎	○ (-10)	◎	◎	·Drill mounting holes in panel surface not required
			Q35BL	Yes	5	○ (-98)	○ (-10)	○ (-98)	◎	·Drill mounting holes in panel surface required except for 2 vertical holes
JRMSI-MB70AS4	Yes	4	Q35BL	Yes	5	▲ (42)	○ (-10)	▲ (42)	◎	·Drill mounting holes in panel surface required except for 2 vertical holes
JRMSI-MB70AS2	Yes	2	Q35BL	Yes	5	▲ (127)	○ (-10)	▲ (127)	◎	·Drill mounting holes in panel surface required except for 2 vertical holes

*1: Values in parentheses indicate differences in dimensions (unit: mm) between the Q series large type base unit and the GL Series modules.

When using an extension base unit

1. Replacing with the MELSEC-Q series base unit or MELSEC-Q series base unit + base adapter

◎: Same, ○: GL Series is larger, ▲: GL Series is smaller

GL Series base unit			MELSEC-Q series base unit							Base adapter						Conversion adapter support flange	Remarks
Model	Includes power supply	Maximum number of slots	Model	Includes power supply	Maximum number of slots	Comparison*1 (MELSEC-Q series - GL Series)				Model	Comparison*2 (Base adapter - GL Series)						
						External dimensions		Mounting dimensions			External dimensions		Mounting dimensions				
						Width	Height	Width	Height		Width	Height	Width	Height			
JRMSI-MB22 / JRMSI-MB22A	Yes	9	Q612B	Yes	12	○ (-41)	○ (-152)	○ (-43)	○ (-120)	ERNT-AQB68	○ (-14)	○ (-10)	○ (-14)	◎	ERNT-AQF12	·Drill mounting holes in panel surface required except for 2 vertical holes when using the base adapter
			Q68B	Yes	8	○ (-152)	○ (-152)	○ (-154)	○ (-120)	ERNT-AQB65	○ (-128)	○ (-10)	○ (-128)	◎	ERNT-AQF8	·Drill mounting holes in panel surface required except for 2 vertical holes when using the base adapter
JRMSI-MB22AS6	Yes	6	Q612B	Yes	12	▲ (69)	○ (-152)	▲ (67)	○ (-120)	ERNT-AQB68	▲ (96)	○ (-10)	▲ (96)	◎	ERNT-AQF12	·Drill mounting holes in panel surface required except for 2 vertical holes when using the base adapter
			Q68B	Yes	8	○ (-42)	○ (-152)	○ (-44)	○ (-120)	ERNT-AQB65	○ (-18)	○ (-10)	○ (-18)	◎	ERNT-AQF8	·Drill mounting holes in panel surface required except for 2 vertical holes when using the base adapter
JRMSI-MB22S5	Yes	5	Q612B	Yes	12	▲ (99)	○ (-152)	▲ (97)	○ (-120)	ERNT-AQB68	▲ (126)	○ (-10)	▲ (126)	◎	ERNT-AQF12	·Drill mounting holes in panel surface required except for 2 vertical holes when using the base adapter
			Q68B	Yes	8	○ (-12)	○ (-152)	○ (-14)	○ (-120)	ERNT-AQB65	▲ (12)	○ (-10)	▲ (12)	◎	ERNT-AQF8	·Drill mounting holes in panel surface required except for 2 vertical holes when using the base adapter
			Q65B	Yes	5	○ (-95)	○ (-152)	○ (-97.6)	○ (-120)	ERNT-AQB55	○ (-43)	○ (-10)	○ (-43)	◎	ERNT-AQF5	·Drill mounting holes in panel surface required except for 2 vertical holes when using the base adapter
			Q55B	No	5	○ (-151)	○ (-152)	○ (-153)	○ (-120)	ERNT-AQB55	○ (-43)	○ (-10)	○ (-43)	◎	ERNT-AQF5	·Drill mounting holes in panel surface required except for 2 vertical holes when using the base adapter
JRMSI-MB22S3	Yes	3	Q68B	Yes	8	▲ (73)	○ (-152)	▲ (71)	○ (-120)	ERNT-AQB65	▲ (97)	○ (-10)	▲ (97)	◎	ERNT-AQF8	·Drill mounting holes in panel surface required except for 2 vertical holes when using the base adapter
			Q65B	Yes	5	○ (-10)	○ (-152)	○ (-12.6)	○ (-120)	ERNT-AQB55	▲ (42)	○ (-10)	▲ (42)	◎	ERNT-AQF5	·Drill mounting holes in panel surface required except for 2 vertical holes when using the base adapter
			Q63B	Yes	3	○ (-66)	○ (-152)	○ (-68)	○ (-120)	ERNT-AQB62	○ (-17)	○ (-10)	○ (-17)	◎	ERNT-AQF3	·Drill mounting holes in panel surface required except for 2 vertical holes when using the base adapter
			Q55B	No	5	○ (-66)	○ (-152)	○ (-68)	○ (-120)	ERNT-AQB55	▲ (42)	○ (-10)	▲ (42)	◎	ERNT-AQF5	·Drill mounting holes in panel surface required except for 2 vertical holes when using the base adapter
			Q52B	No	2	○ (-149)	○ (-152)	○ (-151.5)	○ (-120)	ERNT-AQB52	○ (-72)	○ (-10)	○ (-72)	◎	ERNT-AQF3	·Maximum of 2 slots, so insufficient by 1 slot ·Drill mounting holes in panel surface required except for 2 vertical holes when using the base adapter

*1: Values in parentheses indicate differences in dimensions (unit: mm) between the MELSEC-Q series base unit and GL Series modules.
*2: Values in parentheses indicate differences in dimensions (unit: mm) between the base adapter and GL Series modules.

2. Replacing with the MELSEC-Q series large type base unit

◎: Same, ○: GL Series is larger, ▲: GL Series is smaller

GL Series base unit			MELSEC-Q series large type base unit							Remarks
Model	Includes power supply	Maximum number of slots	Model	Includes power supply	Maximum number of slots	Comparison*1 (MELSEC-Q series - GL Series)				
						External dimensions		Mounting dimensions		
						Width	Height	Width	Height	
JRMSI-MB22 / JRMSI-MB22A	Yes	9	Q68BL	Yes	8	○ (-14)	○ (-10)	○ (-14)	◎	·There is no large type base unit having 9 slots or more. ·Maximum of 8 slots, so insufficient by 1 slot ·Drill mounting holes in panel surface required except for 2 vertical holes
JRMSI-MB22AS6	Yes	6	Q68BL	Yes	8	▲ (96)	○ (-10)	▲ (96)	◎	·Drill mounting holes in panel surface required except for 2 vertical holes
JRMSI-MB22S5	Yes	5	Q65BL	Yes	5	▲ (12)	○ (-10)	▲ (12)	◎	·Drill mounting holes in panel surface required except for 2 vertical holes
			Q55BL	No	5	○ (-43)	○ (-10)	○ (-43)	◎	·Drill mounting holes in panel surface required except for 2 vertical holes
JRMSI-MB22S3	Yes	3	Q65BL	Yes	5	▲ (97)	○ (-10)	▲ (97)	◎	·Drill mounting holes in panel surface required except for 2 vertical holes
			Q55BL	No	5	▲ (42)	○ (-10)	▲ (42)	◎	·Drill mounting holes in panel surface required except for 2 vertical holes

*1: Values in parentheses indicate differences in dimensions (unit: mm) between the Q series large type base unit and the GL Series modules.

Slot Positions

The slot positions differ between the MEMOCON-SC GL Series (2000 Series I/O) and the MELSEC-Q series. After replacement, change the slot positions of modules and adjust the length of cables.

Note

Values in parentheses indicate differences in external dimensions with the MEMOCON-SC GL Series (2000 Series I/O) modules.

When using a main base unit

(1) JRMSI-MB40 → ERNT-AQB38+Q312B / ERNT-AQB38+Q38B / ERNT-AQB35+Q35B / ERNT-AQB32+Q33B / Q38BL / Q35BL

Base adapter + MELSEC-Q series base unit

Unit: mm

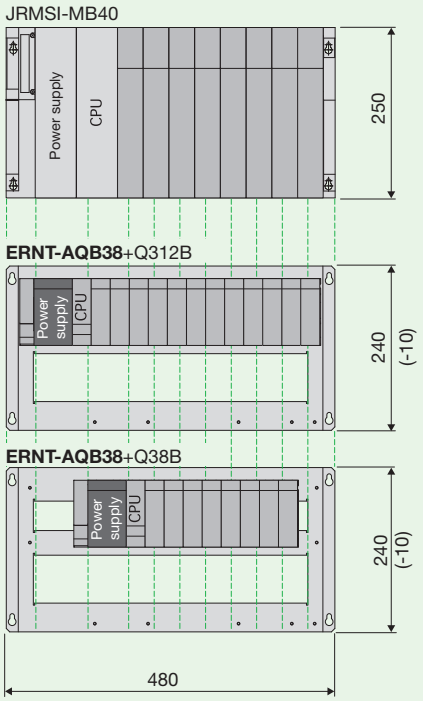

Q series large type base unit

Unit: mm

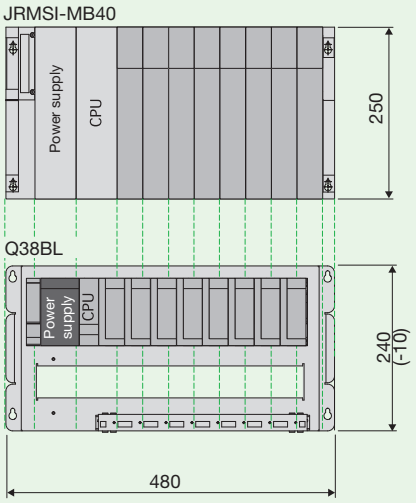

Left-aligned installation

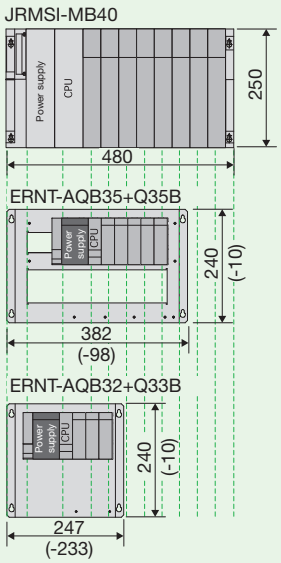

Right-aligned installation

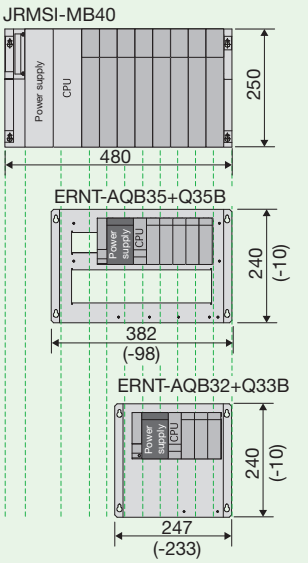

Left-aligned installation

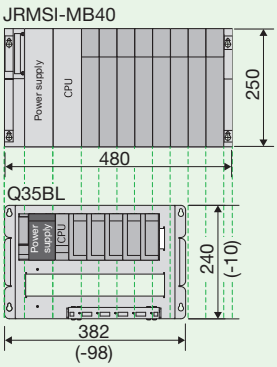

Right-aligned installation

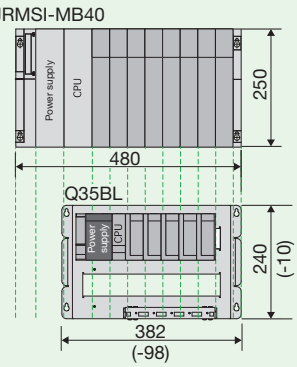

(2) JRMSI-MB60 → ERNT-AQB38+Q312B / ERNT-AQB38+Q38B / ERNT-AQB35+Q35B / ERNT-AQB32+Q33B / Q38BL / Q35BL

Base adapter + MELSEC-Q series base unit

Unit: mm

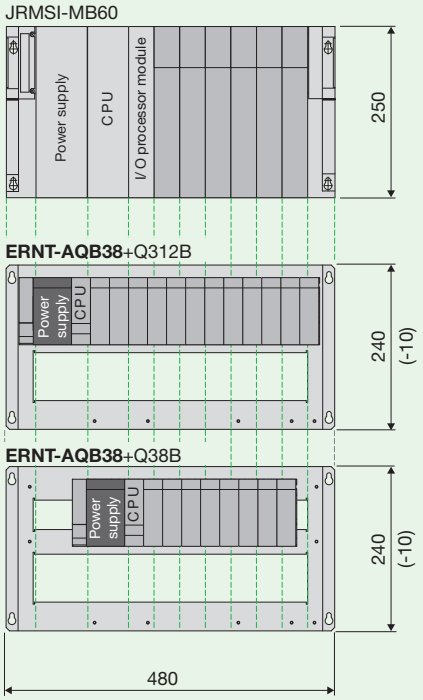

Q series large type base unit

Unit: mm

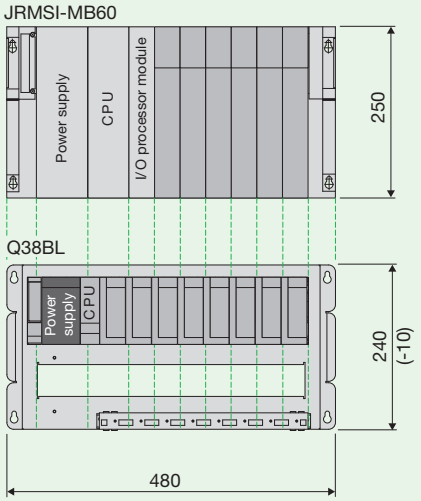

Left-aligned installation

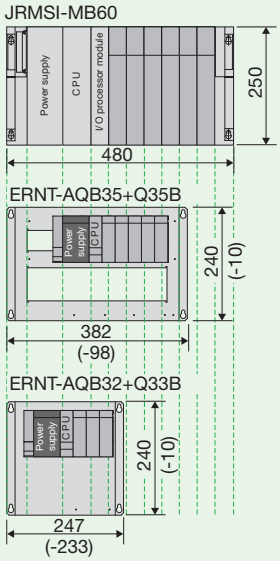

Right-aligned installation

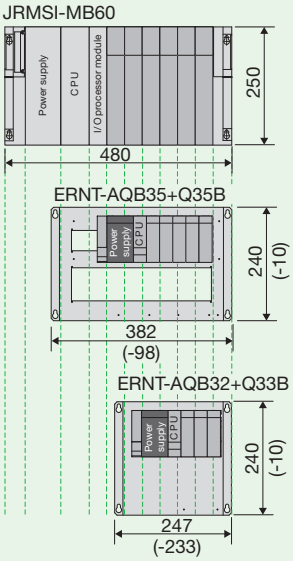

Left-aligned installation

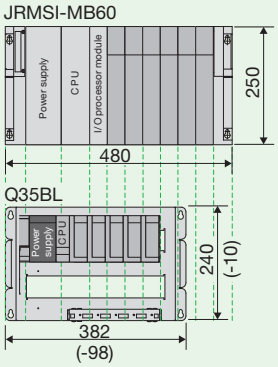

Right-aligned installation

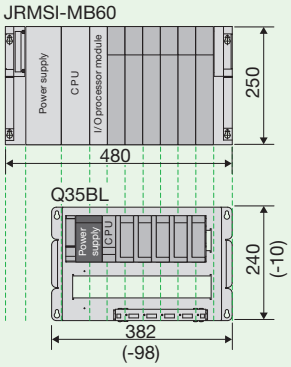

(3) JRMSI-MB60S3 → ERNT-AQB32+Q33B / Q35BL

Base adapter + MELSEC-Q series base unit

Left-aligned installation

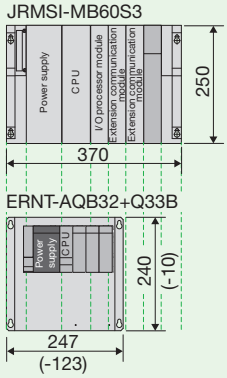

Right-aligned installation

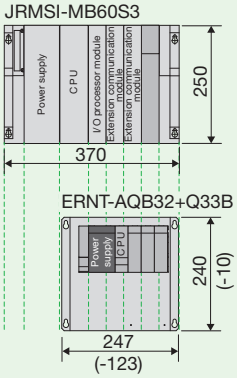

Q series large type base unit

Unit: mm

Left-aligned installation

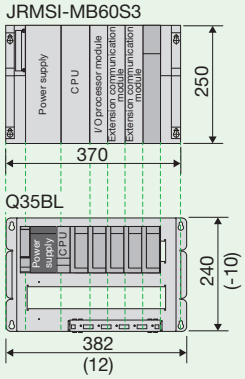

Right-aligned installation

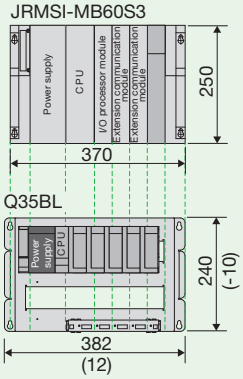

(4) JRMSI-MB70 → ERNT-AQB38+Q312B / ERNT-AQB38+Q38B / ERNT-AQB35+Q35B / ERNT-AQB32+Q33B / Q38BL / Q35BL

Base adapter + MELSEC-Q series base unit

Unit: mm

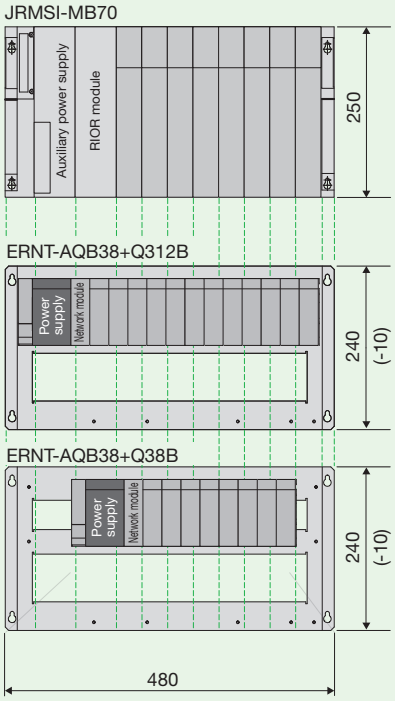

Q series large type base unit

Unit: mm

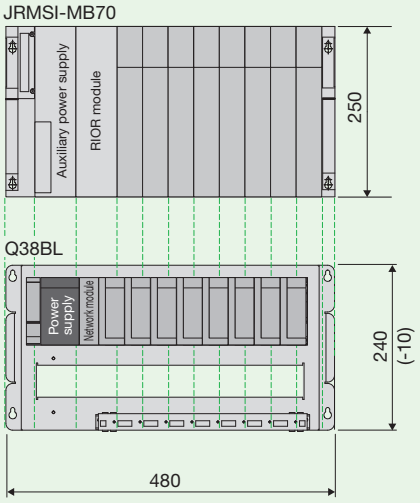

Left-aligned installation

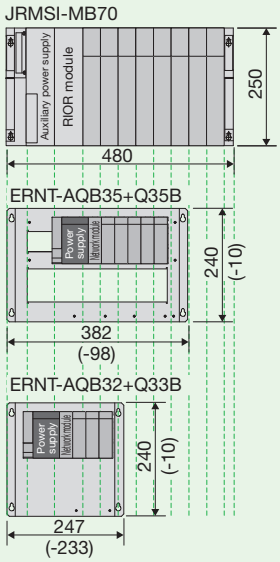

Right-aligned installation

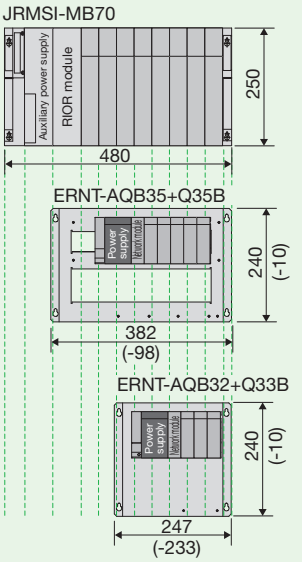

Left-aligned installation

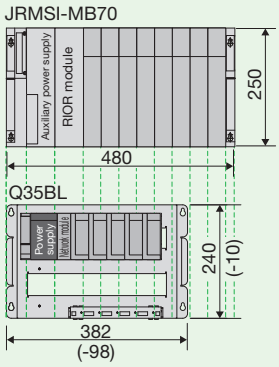

Right-aligned installation

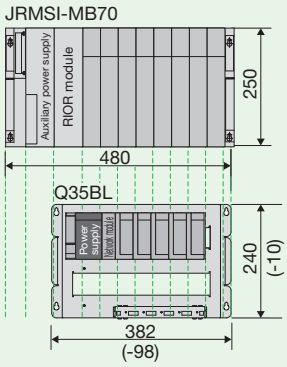

(5) JRMSI-MB70AS4 → ERNT-AQB38+Q312B / ERNT-AQB38+Q38B / ERNT-AQB35+Q35B / ERNT-AQB32+Q33B / Q35BL

Base adapter + MELSEC-Q series base unit

Left-aligned installation

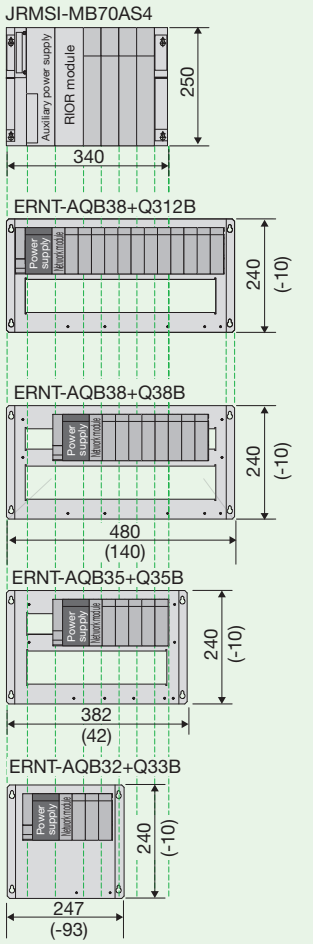

Right-aligned installation

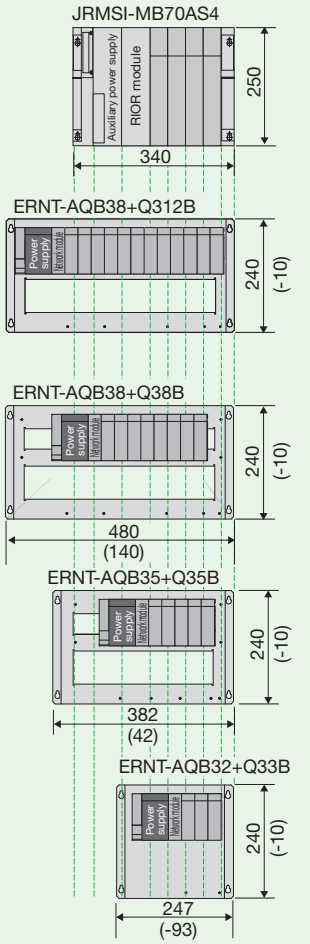

Q series large type base unit

Unit: mm

Left-aligned installation

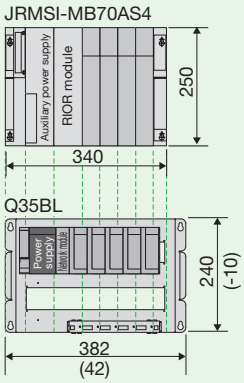

Right-aligned installation

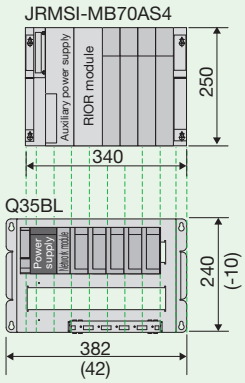

(6) JRMSI-MB70AS2 → ERNT-AQB35+Q35B / ERNT-AQB32+Q33B / Q35BL

Base adapter + MELSEC-Q series base unit

Left-aligned installation

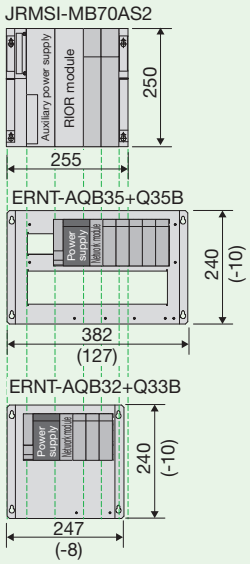

Right-aligned installation

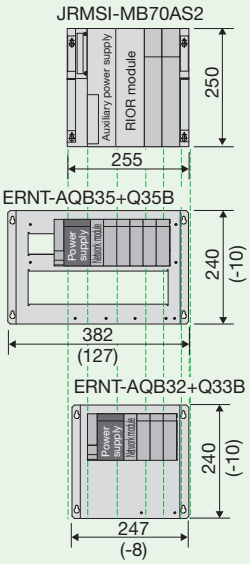

Q series large type base unit

Unit: mm

Left-aligned installation

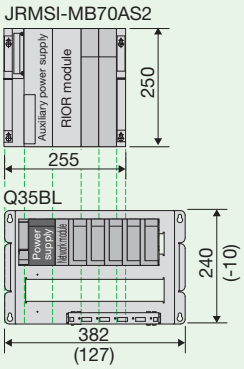

Right-aligned installation

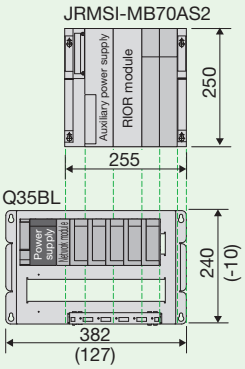

When using an extension base unit

(1) JRMSI-MB22 / JRMSI-MB22A → ERNT-AQB68+Q612B / ERNT-AQB65+Q68B / Q68BL

Base adapter + MELSEC-Q series base unit

Left-aligned installation

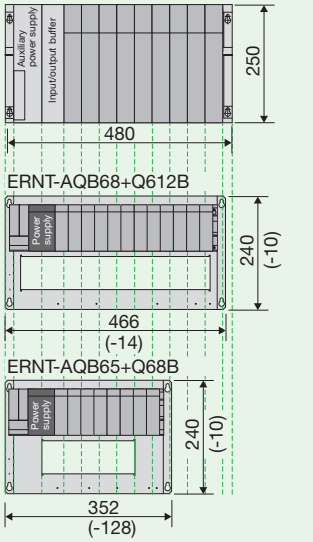

Right-aligned installation

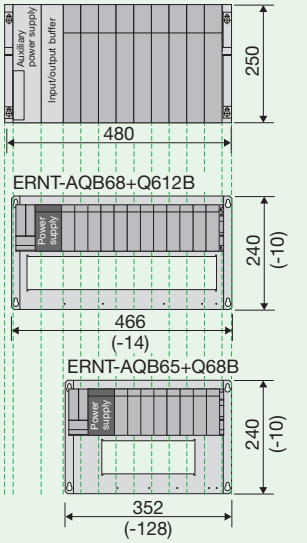

Q series large type base unit

Left-aligned installation

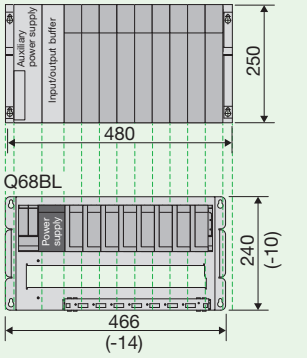

Right-aligned installation

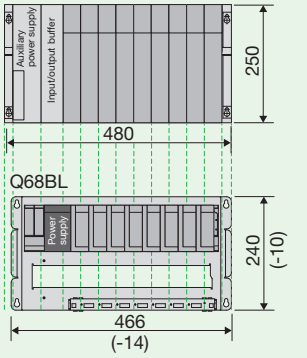

Unit: mm

(2) JRMSI-MB22AS6 → ERNT-AQB68+Q612B / ERNT-AQB65+Q68B / Q68BL

Base adapter + MELSEC-Q series base unit

Left-aligned installation

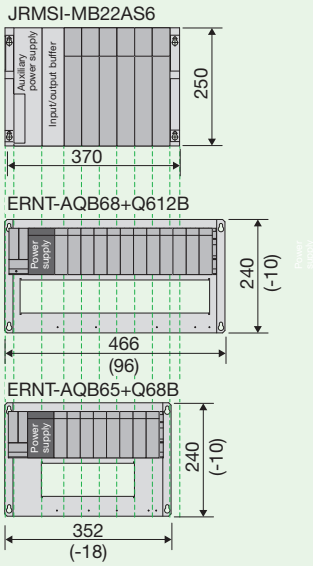

Right-aligned installation

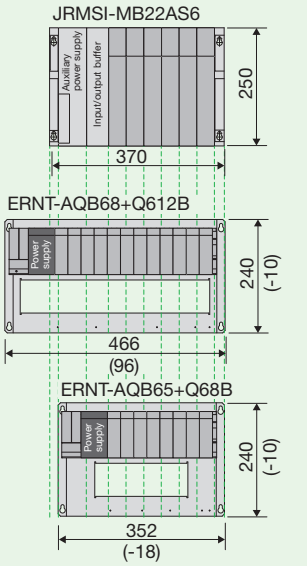

Q series large type base unit

Left-aligned installation

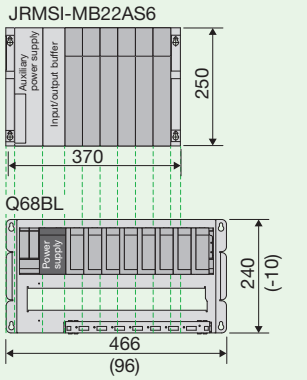

Right-aligned installation

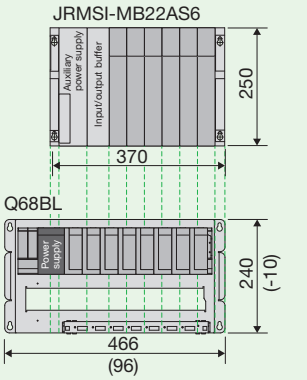

Unit: mm

(3) JRMSI-MB22S5 → ERNT-AQB68+Q612B / ERNT-AQB65+Q68B / ERNT-AQB55+Q65B / ERNT-AQB55+Q55B / Q65BL / Q55BL

Base adapter + MELSEC-Q series base unit

Q series large type base unit

Unit: mm

Left-aligned installation

JRMSI-MB22S5

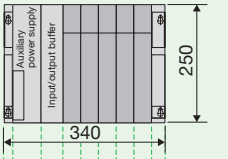

ERNT-AQB68+Q612B

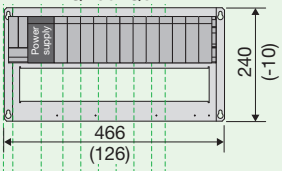

ERNT-AQB65+Q68B

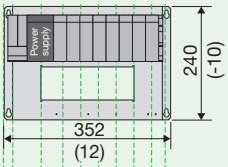

ERNT-AQB55+Q65B

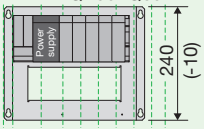

ERNT-AQB55+Q55B

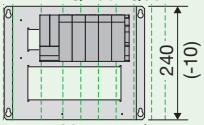

Right-aligned installation

JRMSI-MB22S5

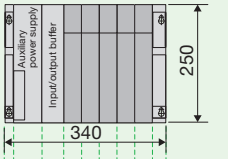

ERNT-AQB68+Q612B

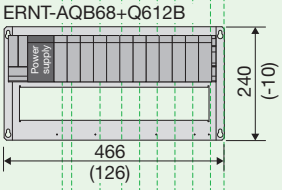

ERNT-AQB65+Q68B

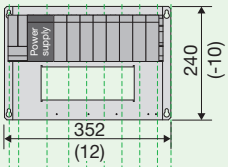

ERNT-AQB55+Q65B

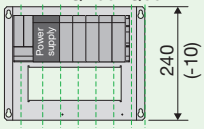

ERNT-AQB55+Q55B

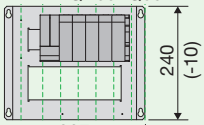

Left-aligned installation

JRMSI-MB22S5

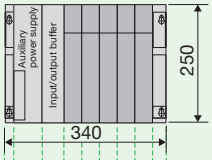

Q65BL

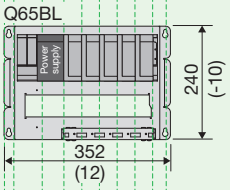

Q55BL

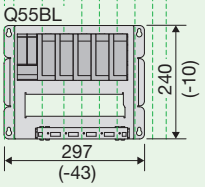

Right-aligned installation

JRMSI-MB22S5

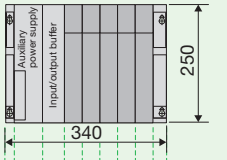

Q65BL

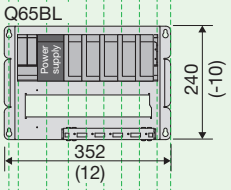

Q55BL

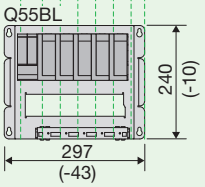

(4) JRMSI-MB22S3 → ERNT-AQB65+Q68B / ERNT-AQB55+Q65B / ERNT-AQB62+Q63B / ERNT-AQB55+Q55B / ERNT-AQB52+Q52B / Q65BL / Q55BL

Base adapter + MELSEC-Q series base unit

Left-aligned installation

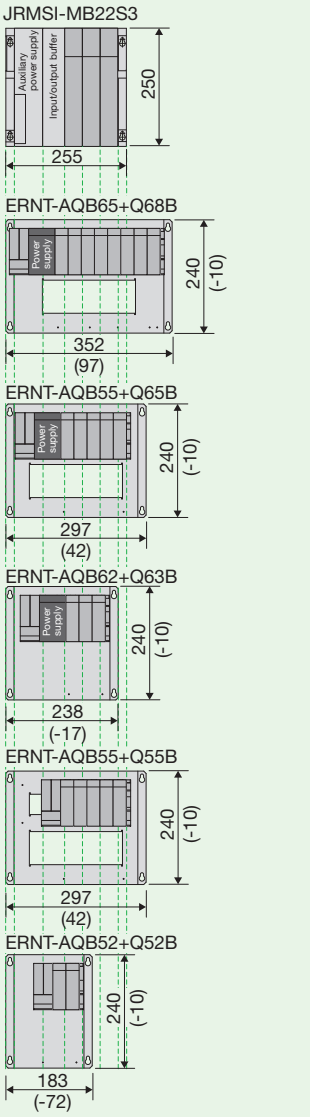

Right-aligned installation

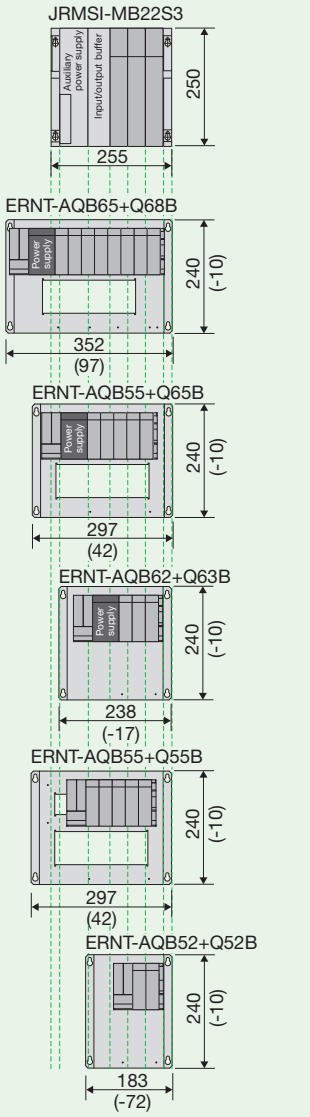

Q series large type base unit

Left-aligned installation

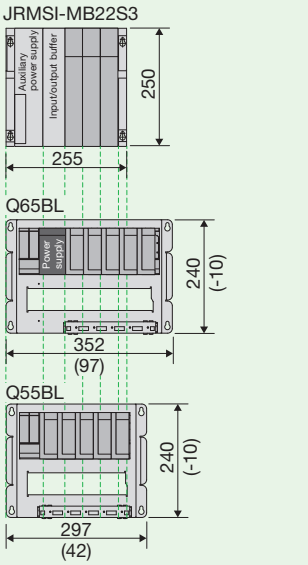

Right-aligned installation

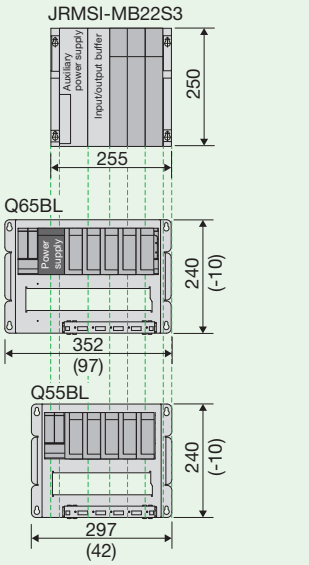

Unit: mm

Usage Precautions

Module Width

(1) Since the width of MELSEC-Q series modules is smaller (MEMOCON-SC GL Series (2000 Series I/O): 37.3mm → MELSEC-Q series: 27.4mm), the wiring area becomes smaller as well. Check the wiring area when mounting a conversion adapter.

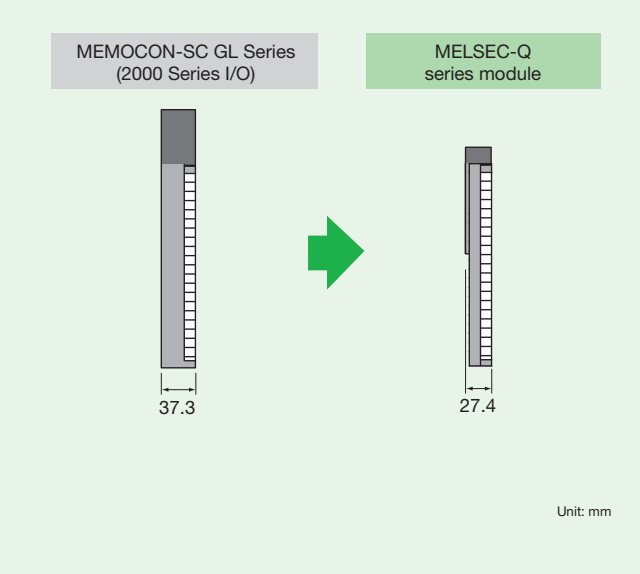

(2) If the wiring causes interference with adjacent modules, take an action such as lifting the wiring forward to prevent interference.

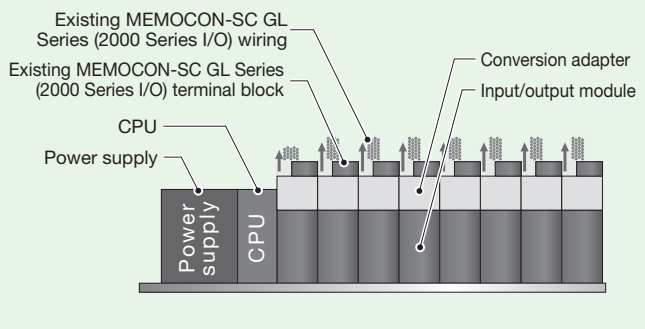

(3) If interference still occurs even when you lift the wiring, keep the next slot open to secure a space for wiring.

Example) Q312B

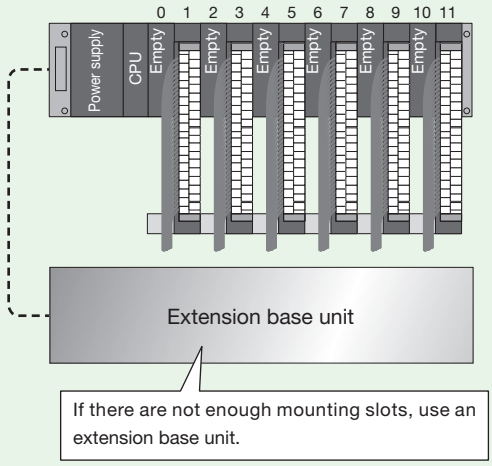

Mount a connector cover (accessory) or blank cover module (QG60) to prevent dust from entering the connector of a spare space where a module is not mounted.

(4) If a problem still exist, consider using the Mitsubishi Electric Q series large type base unit (wiring space of 37.5mm).
Note: The 2-slot type conversion adapter is not applicable.

Depth

The depth dimensions are shown below. The depth dimensions are larger after replacement, and therefore a verification is required during installation.
The values in parentheses, which are 11.8mm smaller, represent the depth when a base adapter or MELSEC-Q series large type base unit is not used.

MEMOCON-SC GL Series (2000 Series I/O) : MEMOCON-SC GL Series (2000 Series I/O)
MELSEC-Q : MELSEC-Q series

1-slot type

Conversion adapter	ERNT-1Y2Q501 ERNT-1Y2Q601611 ERNT-1Y2Q600	ERNT-1Y2Q500	ERNT-1JQ32N34N ERNT-1Y2Q602606	ERNT-1Y2Q615625 ERNT-CQCY213
Depth	**143.8mm** (132mm)	**165.8mm** (154mm)	**164.5mm** (152.7mm)	**173.2mm** (161.4mm)
Mounting diagram	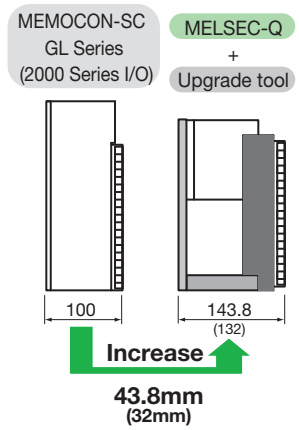	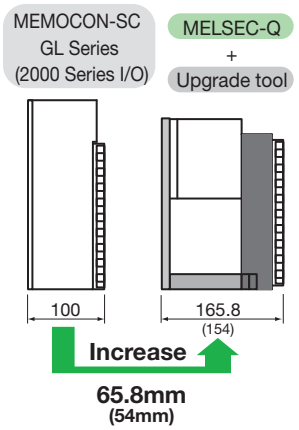	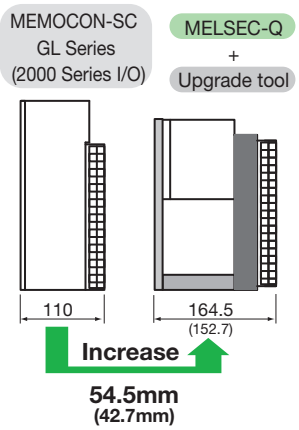	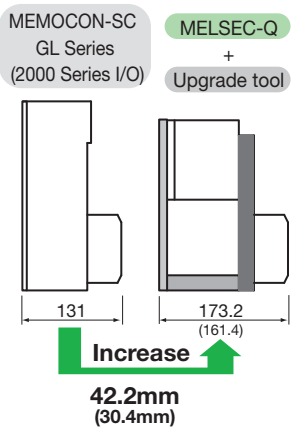

2-slot type

Conversion adapter	ERNT-1Y2Q505 ERNT-1JQ31N34S ERNT-1Y2Q904914	ERNT-1JQ33S
Depth	**153.4mm** (141.6mm)	**175.4mm** (163.6mm)
Mounting diagram	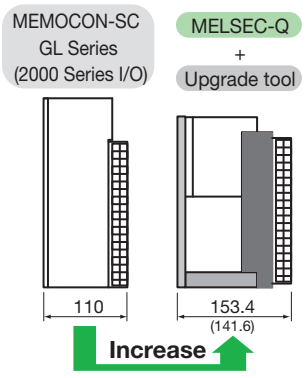	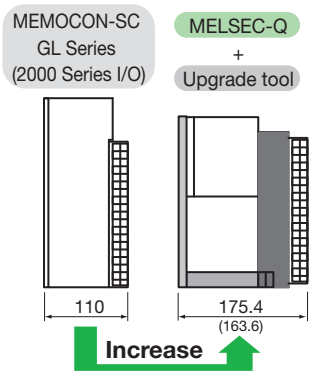

*: Each depth is measured from the panel surface.
(MEMOCON-SC GL Series (2000 Series I/O): Base unit + I/O module + Terminal block (connector), MELSEC-Q series + Upgrade tool: Base adapter + Base unit + I/O module + Conversion adapter + Terminal block (connector))

Check for Interference with Adjacent Modules

If the conversion adapter interferes with the adjacent conversion adapter, leave one slot open between them as shown below.
Note that an open slot is not required when the MELSEC-Q series large type base unit is used because there will be a gap between modules.
Note: The 2-slot type conversion adapter is not applicable.

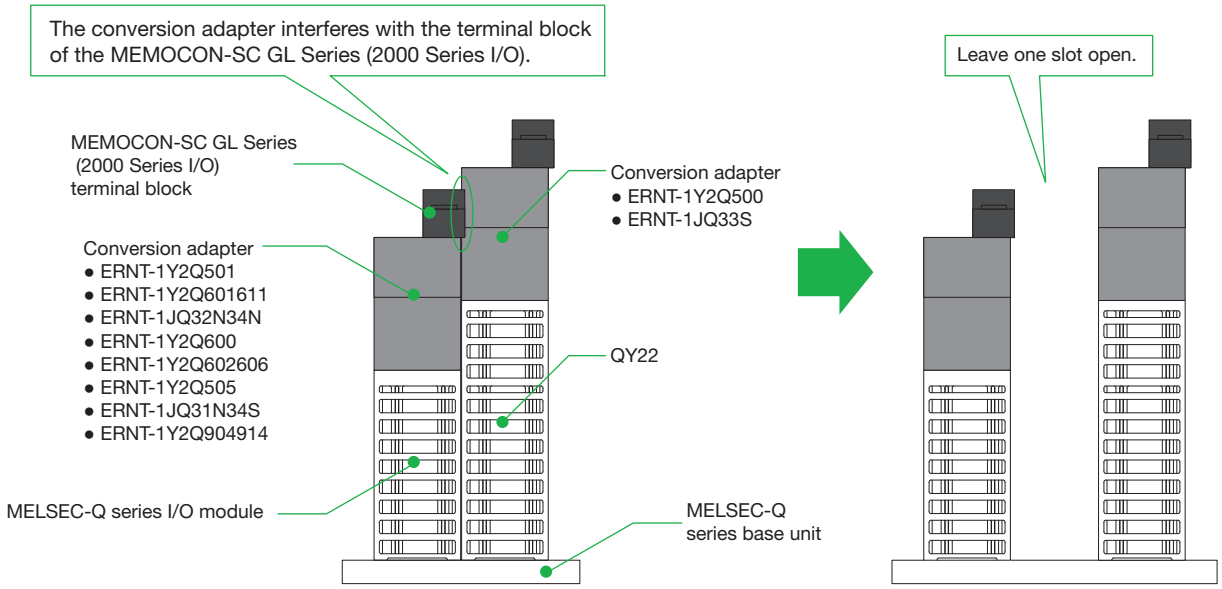

Conversion Adapter Support Flange / Base Adapter

When using a conversion adapter, the conversion adapter support flange is required. We recommend use of a base adapter that permits MELSEC-Q series installation using the mounting holes of the MEMOCON-SC GL Series (2000 Series I/O) (additional drilling of holes is not required).

External Dimensions

Conversion Adapter

Model names:

ERNT-1Y2Q501
ERNT-1Y2Q601611
ERNT-1Y2Q600

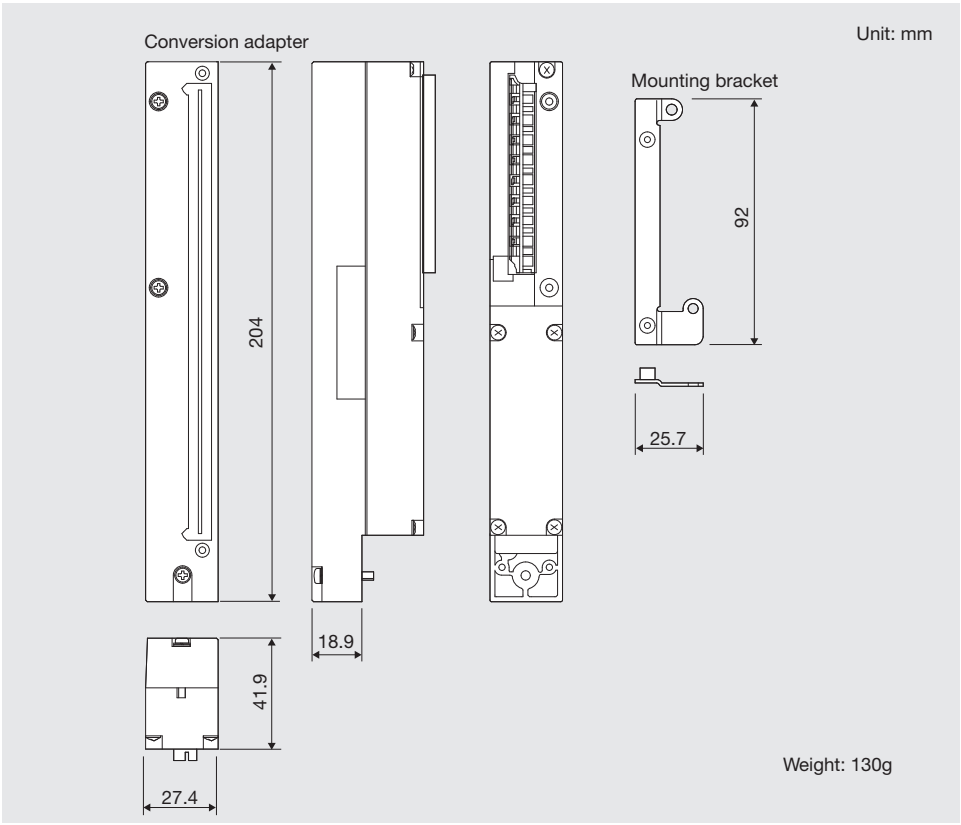

Model name:

ERNT-1Y2Q500

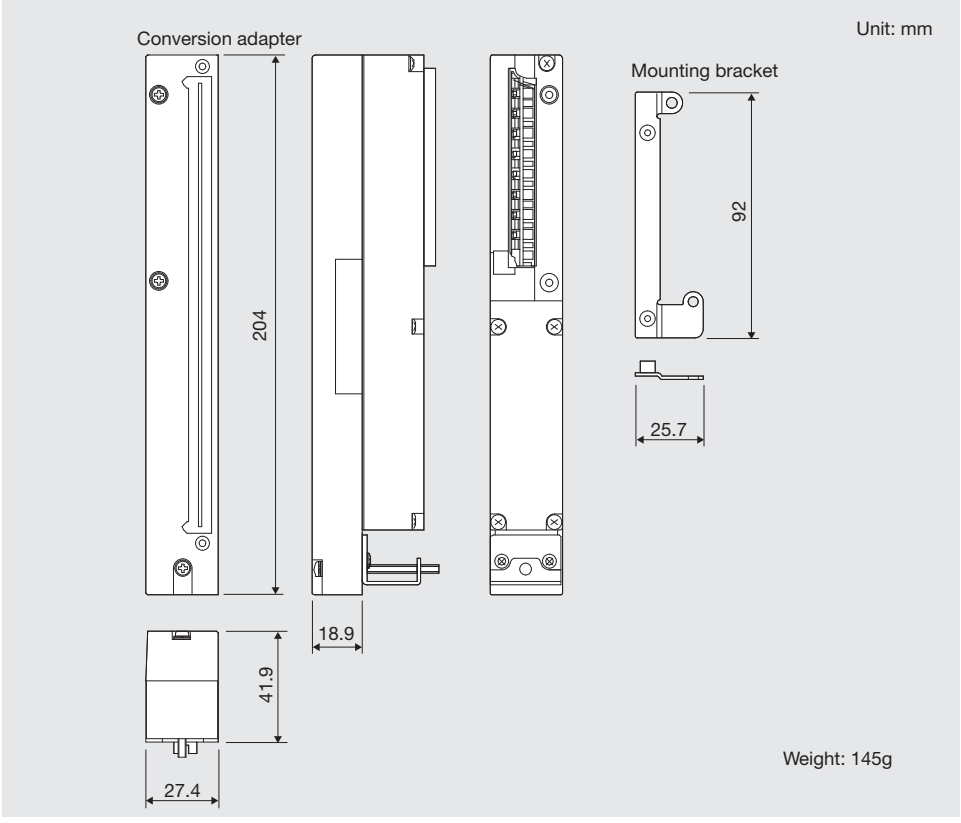

Model names:

ERNT-1JQ32N34N
ERNT-1Y2Q602606

Unit: mm

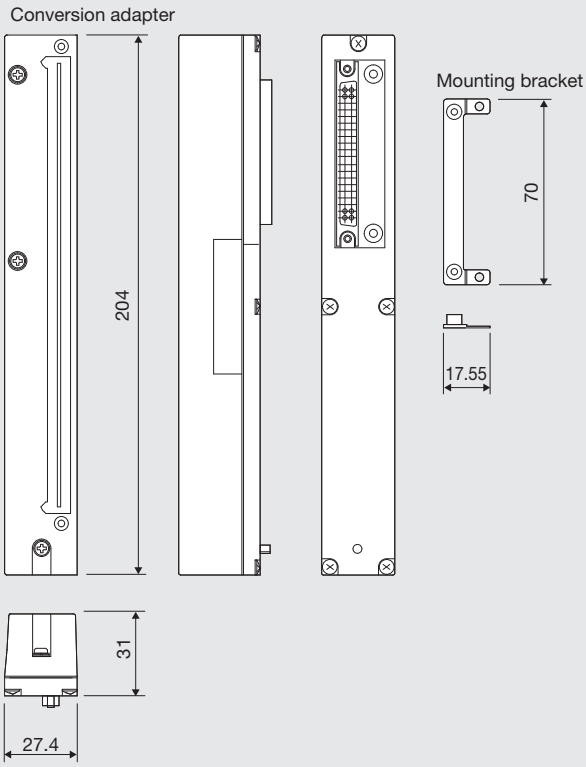

Weight: 125g

Model name:

ERNT-1Y2Q615625

Unit: mm

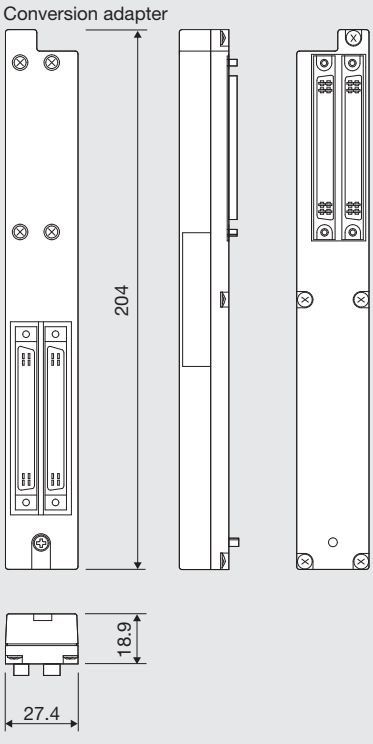

Weight: 105g

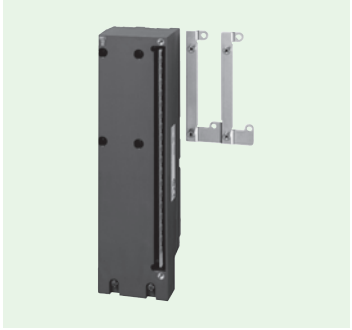

Model names:

ERNT-1JQ31N34S
ERNT-1Y2Q505
ERNT-1Y2Q904914

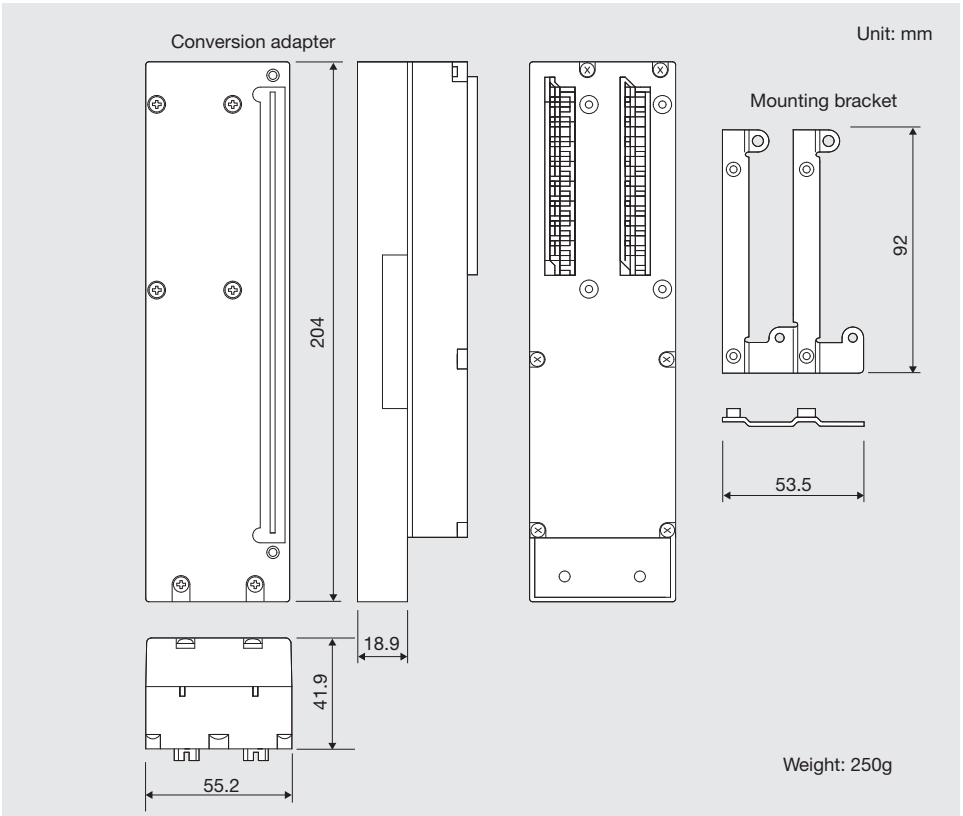

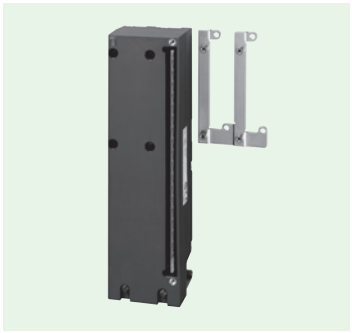

Model name:

ERNT-1JQ33S

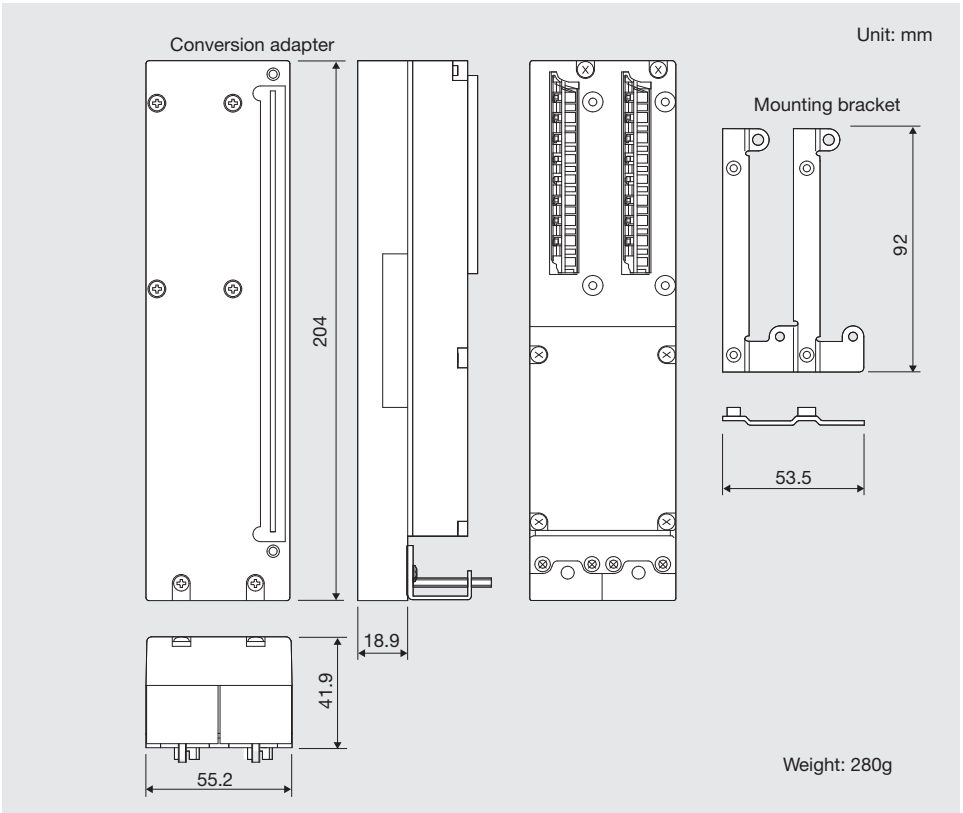

Model name:
ERNT-CQCY213

Conversion adapter

Unit: mm

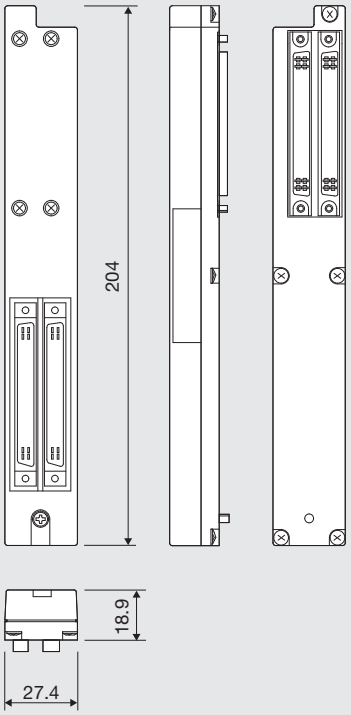

Weight: 102g

Non-Mitsubishi Programmable Controller ⇨ MELSEC-Q Series Upgrade Tool "Universal Conversion Adapter"

Upgrading from a non-Mitsubishi programmable controller to the MELSEC-Q Series

Universal conversion adapter

This universal conversion adapter reduces the burden of rewiring input/output modules (terminal block type) when replacing a non-Mitsubishi programmable controller with a MELSEC-Q series programmable controller manufactured by Mitsubishi Electric.

Product Overview

●When you want to replace a non-Mitsubishi programmable controller (terminal block type) with the MELSEC-Q series (terminal block type), but there is a problem

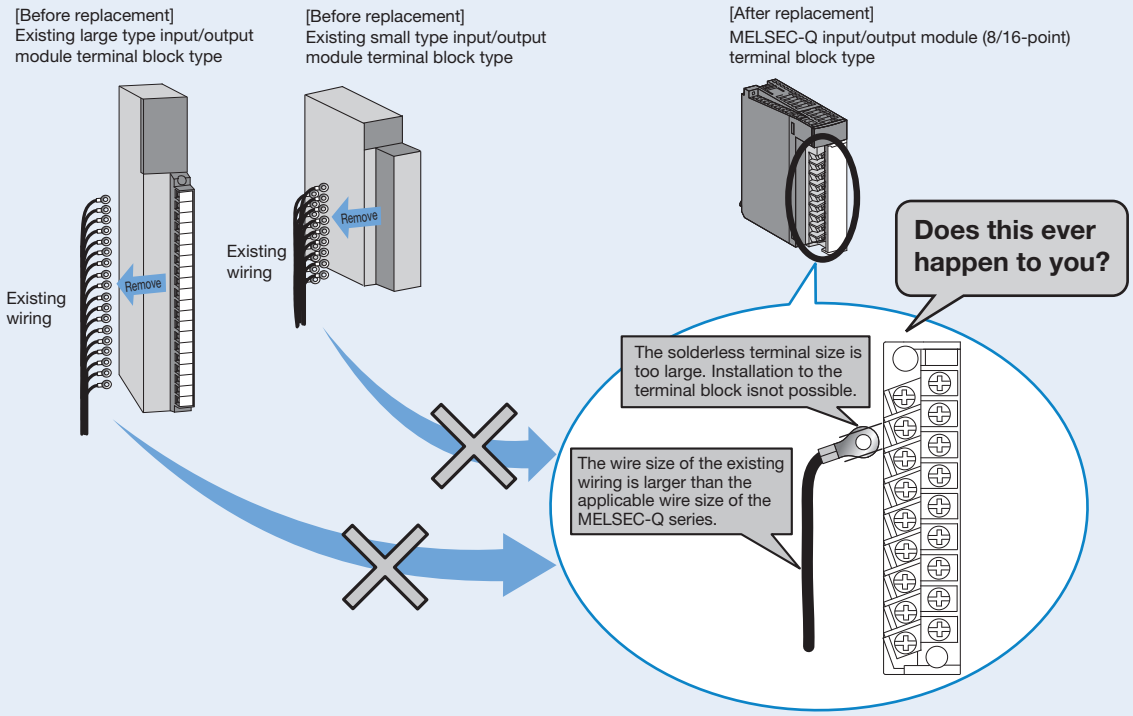

●When you want to replace a non-Mitsubishi programmable controller (terminal block type) with the MELSEC-Q series (connector type), but there is a problem

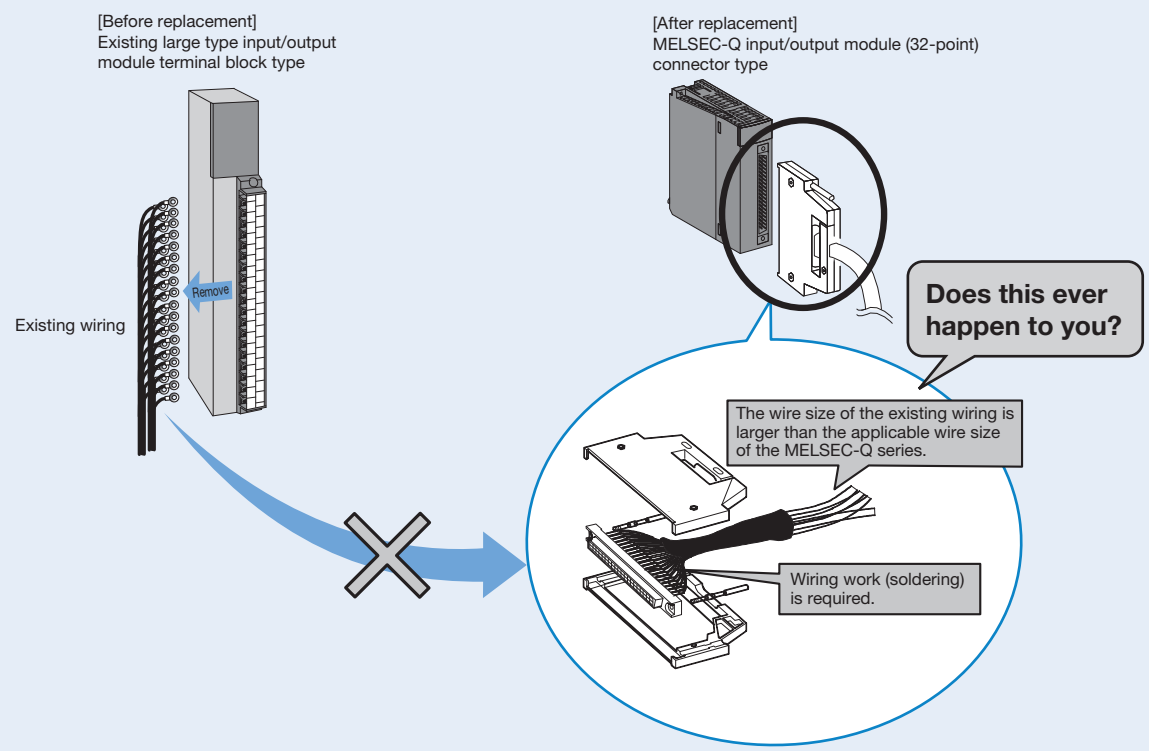

Consider the use of the "universal conversion adapter" as a solution.

If the specifications of your existing connected devices satisfy MELSEC-Q series input/output module specifications, you can use the universal conversion adapter for replacement, regardless of the manufacturer of the existing programmable controller!

Note that this product (universal conversion adapter) is designed under the premises that rewiring (reinstallation of existing wiring to the terminal block) will be performed by the user.

No more frustrations when replacing your non-Mitsubishi programmable controller with the Mitsubishi MELSEC-Q series!

When replacing a non-Mitsubishi programmable controller (large type) with the MELSEC-Q series

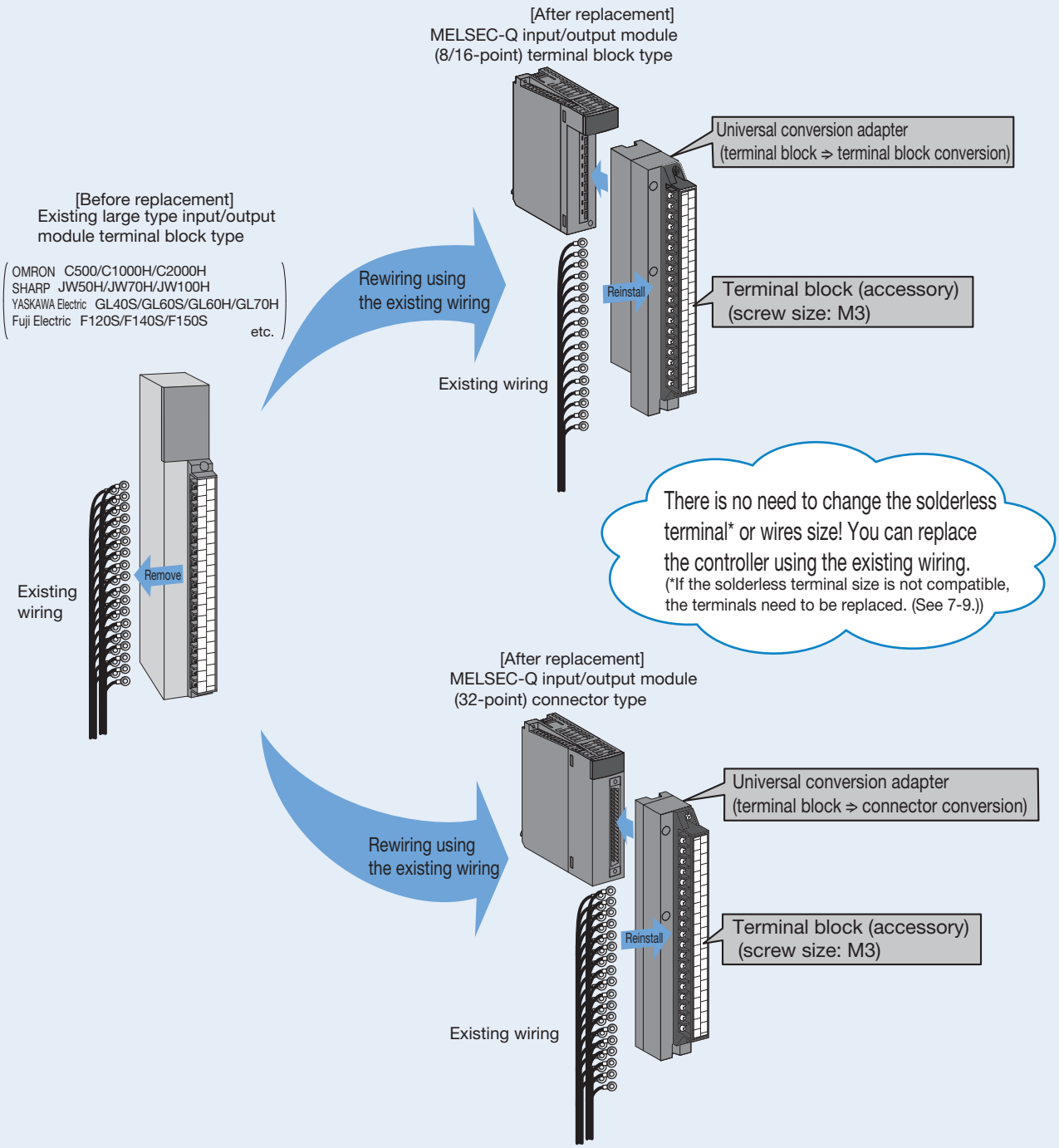

When replacing a non-Mitsubishi programmable controller (small type) with the MELSEC-Q series

[Before replacement]
Existing small type input/output module terminal block type
(OMRON C200H/C200HS/C200HX/C200HE/C200HG
SHARP JW20H/JW30H/JW300
Fuji Electric F55/F70
etc.)

[After replacement]
MELSEC-Q input/output module (8/16-point) terminal block type

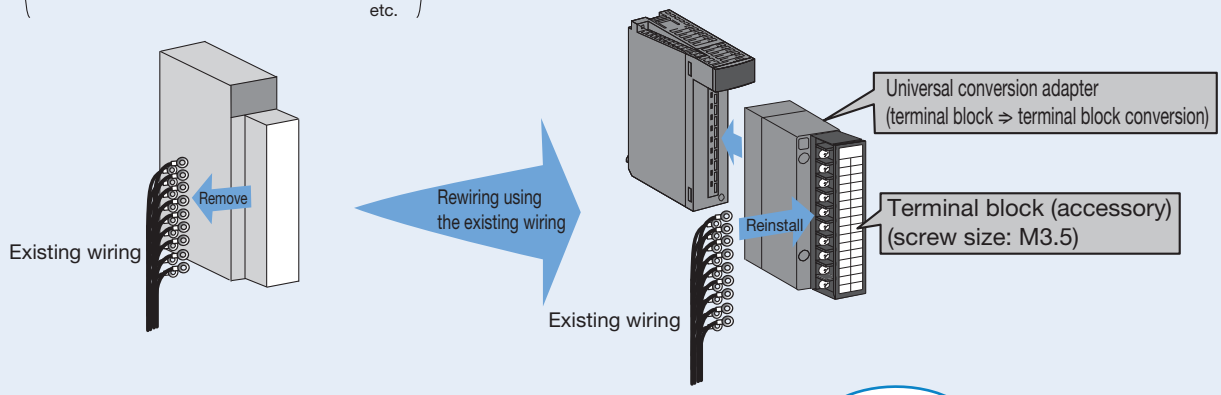

There is no need to change the solderless terminal* or wires size! You can replace the controller using the existing wiring.
(*If the solderless terminal size is not compatible, the terminals need to be replaced. (See 7-9.))

The universal conversion adapter can be also used to...

- Replace the MELSEC-A series, MELSEC-AnS series, or SYSMAC C series modules, for which conventional conversion adapters are incompatible, with the MELSEC-Q series.
- When the existing connected devices are used with a module with the specification of 8 points/common, a common separation module "QX40H/QX70H/QX80H/QX90H" can be used as replacement.

MELSEC-A series / MELSEC-Q series

<Modules for which conventional conversion adapters are incompatible>

Input/Output	MELSEC-A series module before replacement			MELSEC-Q series module after replacement			
	Model	Specifications*	No. of points	Model	Specifications*	No. of points	No. of required modules
Input	AX20(-UL)	200-240VAC	16 points	QX28	100-240VAC	8 points	2 modules
	AX21(EU)		32 points	QX28			4 modules
	AX80	12/24VDC source	16 points	QX70	5/12VDC positive/negative common	16 points	1 modules
	AX80E		16 points	QX70			1 modules
	AX81	12/24VDC source	32 points	QX71	5/12VDC positive/negative common	32 points	1 modules
	AX81-S1	12/24VDC sink/source	32 points	QX71			1 modules
	AX31	12/24VDC 12/24VAC	32 points	QX41	24VDC	32 points	1 modules
				QX71	12VDC	32 points	1 modules
Output	AY20EU	100-240VAC	16 points	QY22	100-240VAC	16 points	1 modules
	AY40A	12/24VDC 0.3A independent	16 points	QY68A	5-24VDC 2A independent	8 points	2 modules
	AY60	24VDC/(12/48VDC) 2A	16 points	QY68A			2 modules
	AY60E		16 points	QY68A			2 modules
	AY60EP	12/24VDC 2A	16 points	QY68A			2 modules
	AY60S(-UL)	24/48VDC/(12VDC) 2A	16 points	QY68A			2 modules
	AY15EU	240VAC 2A	24 points	QY10	240VAC 2A	16 points	2 modules

*Input specifications: Sink = Positive common, Source = Negative common

<Modules for which each common terminal is shared by 8 points>

Input/Output	MELSEC-A series module before replacement			MELSEC-Q series module after replacement			
	Model	Specifications*	No. of points	Model	Specifications*	No. of points	No. of required modules
Input	AX40(-UL)	12/24VDC sink, 8 points/common	16 points	QX40H	24VDC positive common, 8 points/common	16 points	1 modules
	AX70(-UL)	5/12/24VDC sink/source, 8 points/common	16 points	QX70H	5VDC positive common, 8 points/common	16 points	1 modules
				QX90H	5VDC negative common, 8 points/common	16 points	1 modules
	AX80(-UL)	12/24VDC source, 8 points/common	16 points	QX80H	24VDC negative common, 8 points/common	16 points	1 modules
	AX80E						

*Input specifications: Sink = Positive common, Source = Negative common

MELSEC-AnS series / MELSEC-Q series

<Modules for which conventional conversion adapters are incompatible>

Input/Output	MELSEC-AnS series module before replacement			MELSEC-Q series module after replacement			
	Model	Specifications*	No. of points	Model	Specifications*	No. of points	No. of required modules
Input	A1SX30	12/24VDC 12/24VAC	16 points	QX40	24VDC positive common	16 points	1 modules
Output **	A1SY14EU	24VDC/240VAC	12 points	QY10	24VDC/240VAC	16 points	1 modules
**	A1SY18A(EU)	24VDC/240VAC	8 points	QY18A	24VDC/240VAC	8 points	1 modules
**	A1SY68A	5/12/24/48VDC sink/source	8 points	QY68A	5-24VDC sink/source	8 points	1 modules
Combined input/output	A1SX48Y58	Input 24VDC sink Output 12/24VDC sink	Input 8 points Output 8 points	QX48Y57	Input 24VDC positive common Output 12-24VDC sink	Input 8 points Output 7 points	1 modules
	A1SX48Y18	Input 24VDC sink Output 24VDC/240VAC	Input 8 points Output 8 points	QX40+QY10	Input 24VDC positive common Output 24VDC/240VAC	Input 16 points Output 16 points	1 module + 1 module

*Input specifications: Sink = Positive common
**Rewiring is unnecessary. The terminal block provided with the universal conversion adapter is not used.

SYSMAC C series / MELSEC-Q series

<Modules for which conventional conversion adapters are incompatible>

Input/Output	SYSMAC C series module before replacement			MELSEC-Q series module after replacement			
	Model	Specifications*	No. of points	Model	Specifications*	No. of points	No. of required modules
Input	C500-IA222	200-240VAC	16 points	QX28	100-240VAC	8 points	2 modules
	C500-IA223	200-240VAC	32 points	QX28	100-240VAC	8 points	4 modules
Output	C500-OC223	24VDC/250VAC independent	16 points	QY18A	24VDC/240VAC independent	8 points	2 modules
	C500-OD215	24VDC sink independent	16 points	QY68A	5-24VDC sink/source independent	8 points	2 modules
	C500-OD212	12-24VDC source	32 points	QY81P	12-24VDC source	32 points	1 modules
	C500-OA223	250VAC	24 points	QY22	100-240VAC	16 points	2 modules

*Input specifications: Sink = Positive common, Source = Negative common

<Modules for which each common terminal is shared by 8 points>

Input/Output	SYSMAC C series module before replacement			MELSEC-Q series module after replacement			
	Model	Specifications*	No. of points	Model	Specifications*	No. of points	No. of required modules
Input	C500-ID112	5-12VDC sink, 8 points/common	16 points	QX70H	5VDC positive common, 8 points/common	16 points	1 modules
	C500-ID213	12-24VDC sink, 8 points/common	16 points	QX40H	24VDC positive common, 8 points/common	16 points	1 modules

*Input specifications: Sink = Positive common

New Satellite JW Series (large type) / MELSEC-Q series

<Modules for which conventional conversion adapters are incompatible>

Input/Output	New Satellite JW Series (large type) module before replacement			MELSEC-Q series module after replacement			
	Model	Specifications*	No. of points	Model	Specifications*	No. of points	No. of required modules
Input	JW-13N	200-240VAC	16 points	QX28	100-240VAC	8 points	2 modules
Output	JW-35S	12/24VDC source	32 points	QY81P	12/24VDC source	32 points	1 module
Analog input	JW-8AD	0 to ±10VDC, 0 to ±20mADC 14-bit signed binary	8 channels	Q68AD-G	-10 to 0 to +10VDC, 0 to 20mADC 16-bit signed binary	8 channels	1 module
Analog output	JW-2DA	0 to ±10VDC, 0 to ±20mADC 11-bit signed binary	2 channels	Q62DAN	-10 to +10VDC, 0 to 20mADC 16-bit signed binary	2 channels	1 module
High-speed counter input	JW-2HC	50/20/15/8kpps 24-bit binary	2 channels	QD62	200/100/10kpps 32-bit binary	2 channels	1 module

*Input specifications: Source = Negative common

<Modules for which each common terminal is shared by 8 points>

Input/Output	New Satellite JW Series (large type) module before replacement			MELSEC-Q series module after replacement			
	Model	Specifications*	No. of points	Model	Specifications*	No. of points	No. of required modules
Input	JW-12N	12/24VDC, 24VAC Positive/Negative common	16 points	QX40H	24VDC positive common, 8 points/common	16 points	1 module
				QX80H	24VDC negative common, 8 points/common	16 points	1 module
	JW-32N	12/24VDC, 24VAC Positive/Negative common	32 points	QX40H	24VDC positive common, 8 points/common	16 points	2 modules
				QX80H	24VDC negative common, 8 points/common	16 points	2 modules
	JW-34N	12/24VDC Positive/Negative common	32 points	QX40H	24VDC positive common, 8 points/common	16 points	2 modules
				QX80H	24VDC negative common, 8 points/common	16 points	2 modules

*Input specifications: Sink = Positive common, Source = Negative common

New Satellite JW Series (small type) / MELSEC-Q series

<Modules for which conventional conversion adapters are incompatible>

Input/Output	New Satellite JW Series (small type) module before replacement			MELSEC-Q series module after replacement			
	Model	Specifications*	No. of points	Model	Specifications*	No. of points	No. of required modules
Input	JW-203N	200/240VAC	8 points	QX28	100-240VAC	8 points	1 module
	JW-201N	100/120VAC	8 points	QX28	100-240VAC	8 points	1 module
	JW-202N	12/24VDC	8 points	QX40,QX40-S1	24VDC positive common	16 points	1 module
				QX70	12VDC positive common	16 points	1 module
Output	JW-203S	100/120VAC	8 points	QY22	100-240VAC	16 points	1 module
	JW-204S JW-204SA	250VAC/30VDC 2A independent	8 points	QY18A	240VAC/24VDC 2A independent	8 points	1 module
	JW-202S	5/12/24VDC sink	8 points	QY68A	5-24VDC 2A independent	8 points	1 module
	JW-215SA	5/12/24VDC source	16 points	QY80P	12/24VDC source	16 points	1 module
Analog input	JW-24AD	0 to ±10VDC, 0 to ±20mADC 13-bit signed binary	4 channels	Q64AD	-10 to 0 to +10VDC, 0 to 20mADC 16-bit signed binary	4 channels	1 module
Analog output	JW-222DA	0 to ±10VDC, 0 to ±20mADC 15-bit signed binary	2 channels	Q62DAN	-10 to +10VDC, 0 to 20mADC 16-bit signed binary	2 channels	1 module
High-speed counter input	JW-21HC	60kpps 32-bit binary	1 channels	QD62	200/100/10kpps 32-bit binary	2 channels	1 module
	JW-22HC	240kpps 32-bit binary	2 channels	QD62	200/100/10kpps 32-bit binary	2 channels	1 module

*Input specifications: Sink = Positive common, Source = Negative common

<Modules for which each common terminal is shared by 8 points>

Input/Output	New Satellite JW Series (small type) module before replacement			MELSEC-Q series module after replacement			
	Model	Specifications*	No. of points	Model	Specifications*	No. of points	No. of required modules
Input	JW-212N JW-212NA JW-214N JW-214NA	12/24VDC Positive/Negative common	16 points	QX40H	24VDC positive common, 8 points/common	16 points	1 module
				QX80H	24VDC negative common, 8 points/common	16 points	1 module

*Input specifications: Sink = Positive common, Source = Negative common

MEMOCON-SC GL Series (2000 Series I/O) / MELSEC-Q series

<Modules for which conventional conversion adapters are incompatible>

Input/Output	MEMOCON-SC GL Series (2000 Series I/O) before replacement			MELSEC-Q series module after replacement			
	Model	Specifications*	No. of points	Model	Specifications*	No. of points	No. of required modules
Input	JAMSC-B2503A	200VAC	16 points	QX28	100-240VAC	8 points	2 module
	JAMSC-B2507A	200VAC	32 points	QX28	100-240VAC	8 points	4 module
Output	JAMSC-B2912	100/200VAC 24VDC	32 points	QY10	100-200VAC 24VDC	16 points	2 module
	JAMSC-B2624	5VDC sink	64 points	QY41H	5/12/24VDC sink	32 points	2 module
	JAMSC-B2630	12/24VDC source	16 points	QY80	12/24VDC source	16 points	1 module
	JAMSC-B2632	12/24VDC source	32 points	QY81P	12/24VDC source	32 points	1 module

*Input specifications: Sink = Positive common, Source = Negative common

<Modules for which each common terminal is shared by 8 points>

Input/Output	MEMOCON-SC GL Series (2000 Series I/O) before replacement			MELSEC-Q series module after replacement			
	Model	Specifications*	No. of points	Model	Specifications*	No. of points	No. of required modules
Input	JAMSC-B2601	12/24VDC Positive/Negative common	16 points	QX40H	24VDC positive common, 8 points/common	16 points	1 module
				QX80H	24VDC negative common, 8 points/common	16 points	1 module
	JAMSC-B2603	12/24VDC Positive/Negative common	32 points	QX40H	24VDC positive common, 8 points/common	16 points	2 module
				QX80H	24VDC negative common, 8 points/common	16 points	2 module

*Input specifications: Sink = Positive common, Source = Negative common

Point Verify that the MELSEC-Q series module specifications satisfy the specifications of the connected devices and equipment.

Utilizing the Mitsubishi Electric Q series / AnS-size Q series large type base unit

If this is smaller than the width of the existing module, a wiring interference may occur with adjacent modules due to a narrow wiring space. The Mitsubishi Electric Q series large type base unit (Q□□BL) or AnS-size Q series large type base unit (Q□□BLS, Q□□BLS-D) can be used to secure a wider space and alleviate the interference.

Universal conversion adapter (large type)

Q series large type base unit

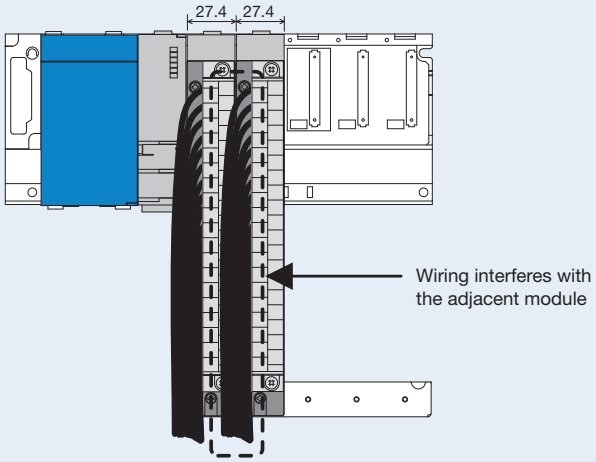

Q series large type base unit (Q□□BL)

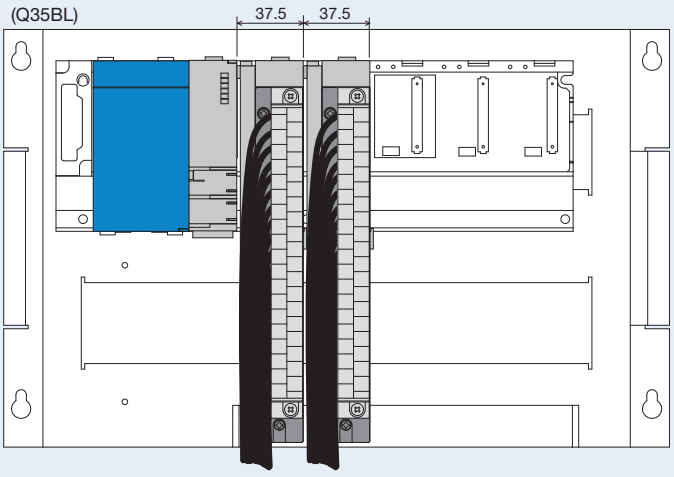

Universal conversion adapter (small type)

Q series large type base unit

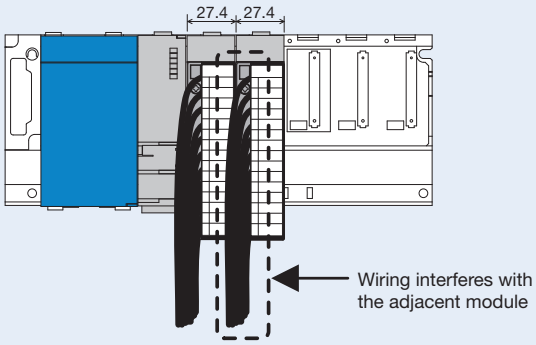

AnS-size Q series large type base unit (Q□□BLS, Q□□BLS-D)

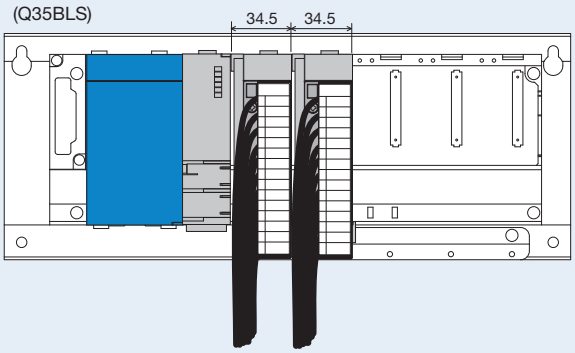

List of the Q series large type base units

Main/Extension	Q series large type base unit model
Main	Q35BL
	Q38BL
Extension	Q65BL
	Q68BL
	Q55BL

List of the AnS-size Q series large type base units

Main/Extension	Q series large type base unit model	
	Panel surface installation type	DIN rail installation type
Main	Q35BLS	Q35BLS-D
	Q38BLS	Q38BLS-D
Extension	Q65BLS	Q65BLS-D
	Q68BLS	Q68BLS-D
	Q55BLS	Q55BLS-D

Memo

Replacement flow

(1) Remove the existing wiring from the terminal block of the existing module.

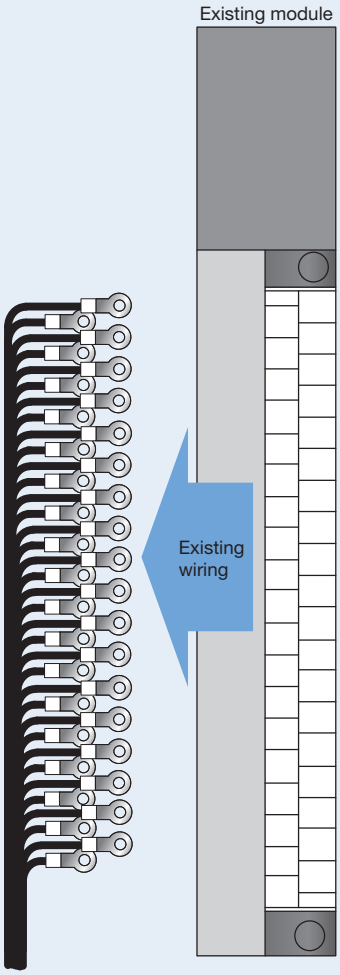

(2) Check the solderless terminal.

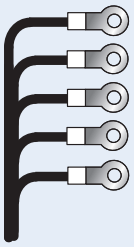

・Check the dimensions of the solderless terminal.
・If the solderless terminal is not compatible, the terminal needs to be changed.

Universal conversion adapter for the large type

● Applicable solderless terminal Unit: mm

Round non-insulated solderless terminal

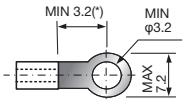

Round insulated solderless terminal

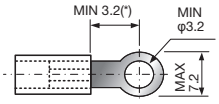

Y-shaped non-insulated solderless terminal

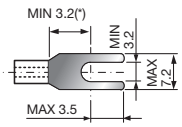

Y-shaped insulated solderless terminal

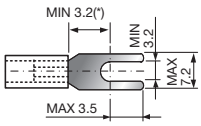

*The minimum length is 4.75 mm when the solderless terminal is attached up side down as shown on the right.

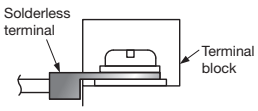

● Terminal block shape Unit: mm

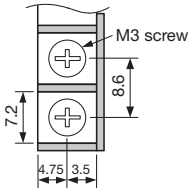

Universal conversion adapter for the small type

● Applicable solderless terminal Unit: mm

Round non-insulated solderless terminal

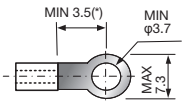

Round insulated solderless terminal

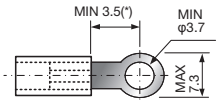

Y-shaped non-insulated solderless terminal

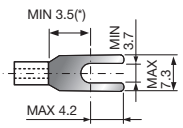

Y-shaped insulated solderless terminal

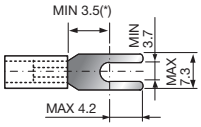

*The minimum length is 5.0 mm when the solderless terminal is attached up side down as shown on the right.

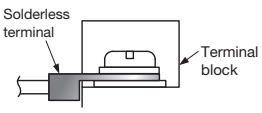

● Terminal block shape Unit: mm

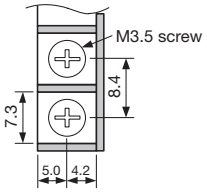

(3) Reinstall the existing wiring to the terminal block of the universal conversion adapter.

Check the external connection diagram of each MELSEC-Q series module to be used, and reinstall the existing wiring to the terminal block of the universal conversion adapter.

External connection diagram (example)

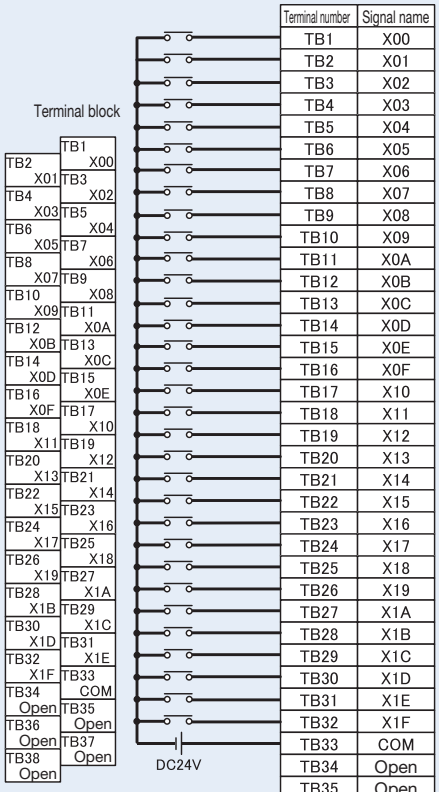

Terminal number	Signal name
TB1	X00
TB2	X01
TB3	X02
TB4	X03
TB5	X04
TB6	X05
TB7	X06
TB8	X07
TB9	X08
TB10	X09
TB11	X0A
TB12	X0B
TB13	X0C
TB14	X0D
TB15	X0E
TB16	X0F
TB17	X10
TB18	X11
TB19	X12
TB20	X13
TB21	X14
TB22	X15
TB23	X16
TB24	X17
TB25	X18
TB26	X19
TB27	X1A
TB28	X1B
TB29	X1C
TB30	X1D
TB31	X1E
TB32	X1F
TB33	COM
TB34	Open
TB35	Open
TB36	Open
TB37	Open
TB38	Open

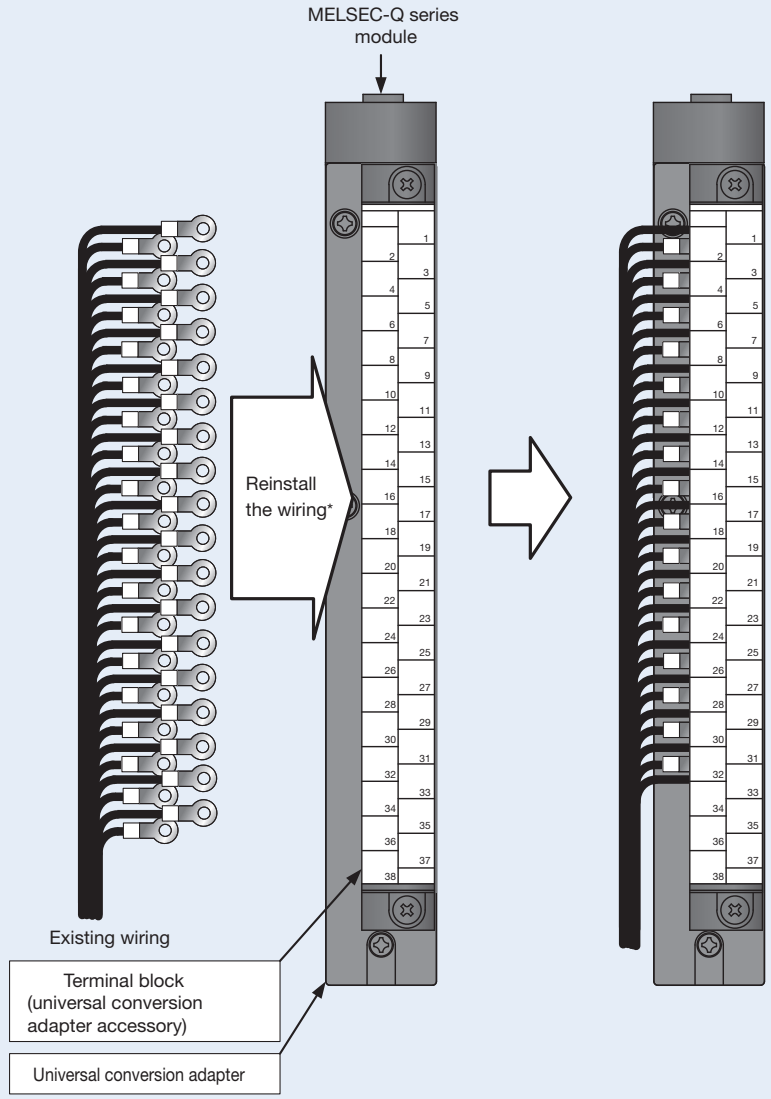

* After replacement, connect the wires in accordance with the terminal numbers and signal names when the universal conversion adapter was used.
* Depending on the difference in the number of points per common, such as a change from 8 points/common to 16 points/common, connection changes on the connected device (switch, etc.) side may be required.
* When any wires are left unconnected, connect them to open terminals or insulate them.

Schematic Diagram for Replacing a Non-Mitsubishi Programmable Controller (Large Type) with the MELSEC-Q Series

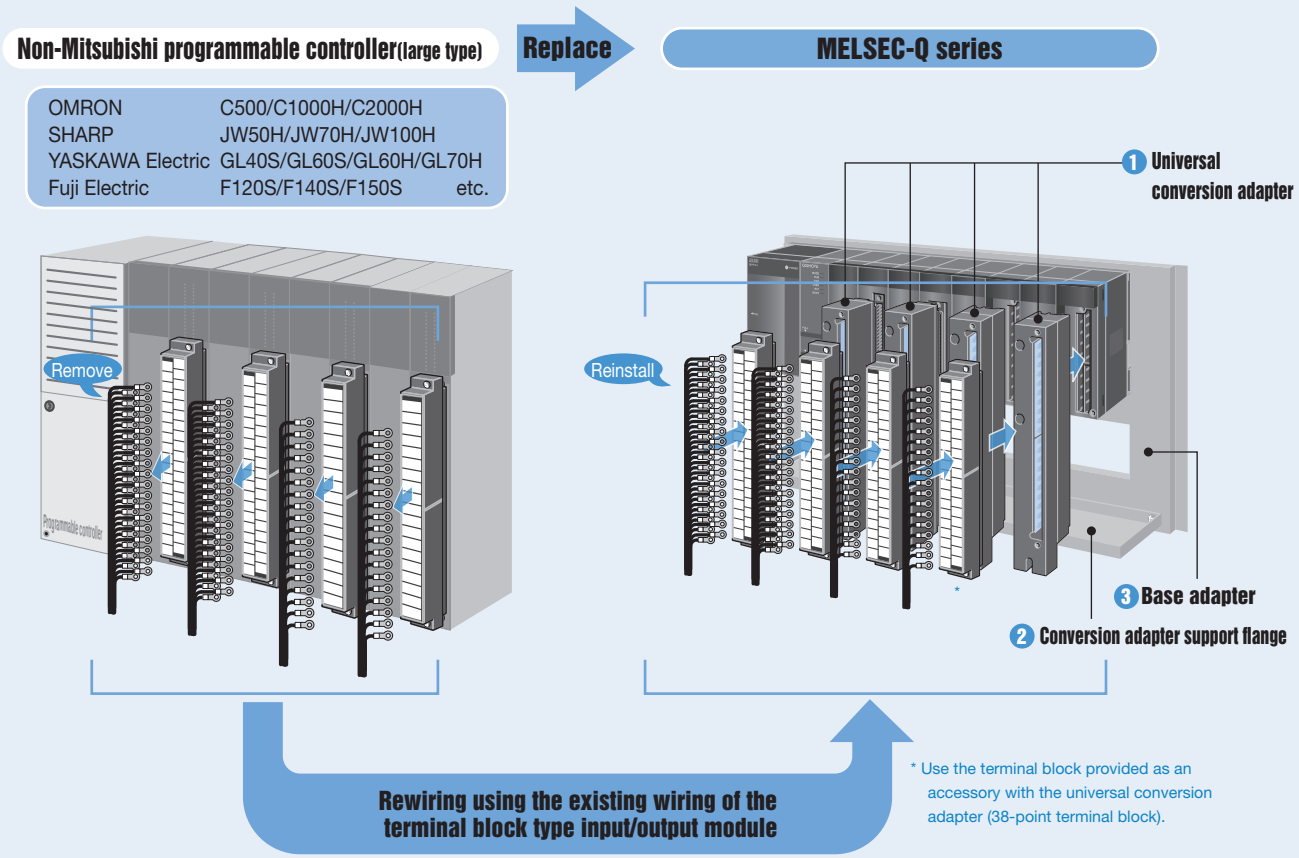

1 Universal conversion adapter (large type)

7-15

Signals of the MELSEC-Q series module are directly indicated on the terminal block.

2 Conversion adapter support flange

7-29

Secure the bottom of the conversion adapter. For panel surface installation, however, drilling screw holes (M4 screw, 2 locations) is required. Note that drilling screw holes is not required when a base adapter is used.

3 Base adapter

7-31

The MELSEC-Q series base unit and conversion adapter support flange can be installed simultaneously without drilling screw holes (six locations). However, the user has to drill screw holes (M5 screws) and obtain four M5 screws for panel surface installation.

Point

The universal conversion adapter (large type) can be used in the system after replacing the MELSEC-A series or SYSMAC C series with the MELSEC-Q series using the upgrade tool. The universal conversion adapter can be also used with Mitsubishi Electric Q series large type base units (Q□□BL).

Schematic Diagram for Replacing a Non-Mitsubishi Programmable Controller (Small Type) with the MELSEC-Q Series

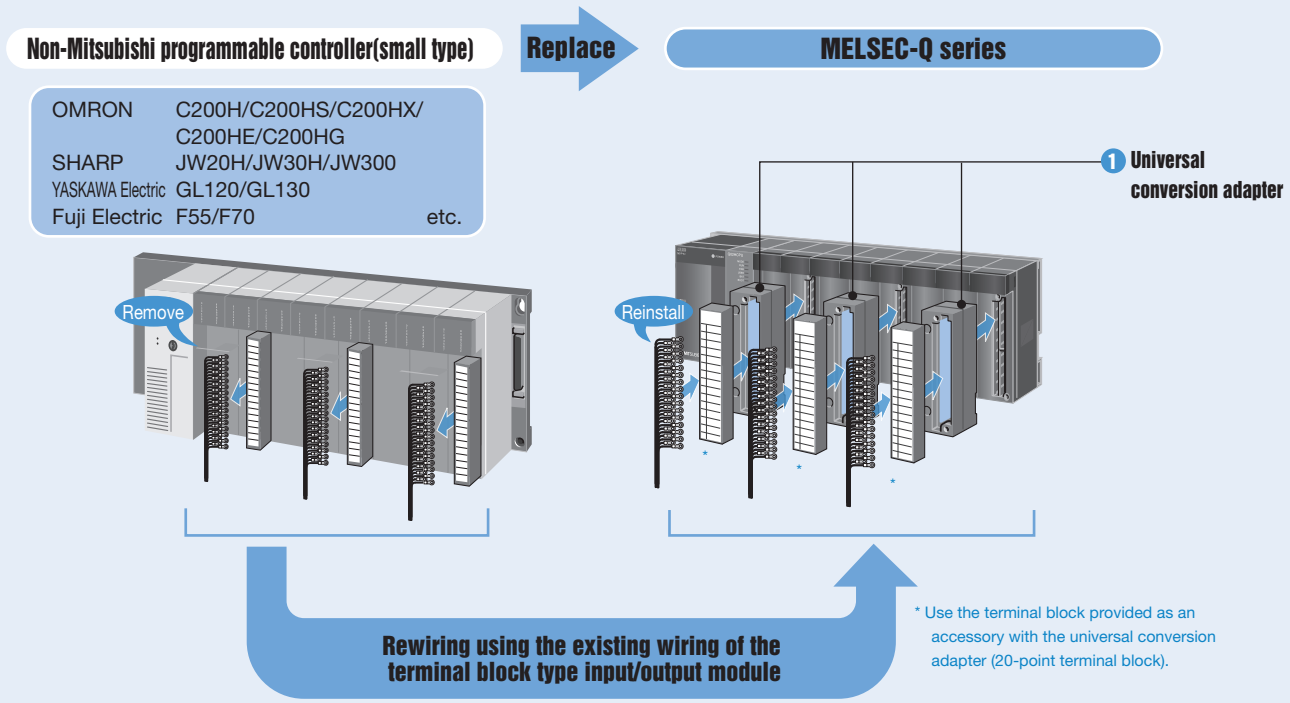

1 Universal conversion adapter (small type) 7-41

Signals of the MELSEC-Q series module are directly indicated on the terminal block.

Point

The universal conversion adapter (small type) can be used in the system after replacing the MELSEC-AnS series with the MELSEC-Q series using the upgrade tool. The universal conversion adapter can be also used with the Mitsubishi Electric AnS-size Q series large type base units (Q□□BLS, Q□□BLS-D).

Replacing a Non-Mitsubishi Programmable Controller (Large Type) with the MELSEC-Q Series

Model List

1 Universal Conversion Adapter (Large Type)

Verify that the MELSEC-Q series module electrical specifications satisfy the specifications of existing connected devices.

For input/output module

<1-slot type>(Attachable to the Mitsubishi Electric Q series large type base unit (Q□□BL) as well)

Input/Output	MELSEC-Q series module model after replacement	Conversion adapter			Page
		Model	Shape		
			Terminal block (accessory)	MELSEC-Q series	
Input	QX10	ERNT-AQTB20	Terminal block (*) (38 points)	Terminal block (18 points)	7-15 7-16 to 7-22
	QX28				
	QX40				
	QX40-S1				
	QX40H				
	QX50				
	QX70				
	QX70H				
	QX80				
	QX80H				
	QX90H				
Output	QY10				
	QY18A				
	QY40P				
	QY50				
	QY68A				
	QY70				
	QY80				
Combined input/output	QX48Y57				
Output	QY22	ERNT-AQTB20-S1	Terminal block (*) (38 points)	Terminal block (18 points)	7-15 7-23
Input	QX41	ERNT-AQTB38	Terminal block (38 points)	FCN connector (40P)	7-15 7-24 to 7-26
	QX41-S1				
	QX41-S2				
	QX71				
Output	QY41P				
	QY41H				
	QY71				
Input	QX81	ERNT-AQTB38-E	Terminal block (38 points)	D-Sub connector (37P)	7-15 7-27 to 7-28
	QX81-S2				
Output	QY81P				

*The terminal block provided as an accessory is a 38-point terminal block.

Point

The universal conversion adapter (large type) can be used in the system after replacing the MELSEC-A series or SYSMAC C series with the MELSEC-Q series using the upgrade tool.

2 Conversion Adapter Support Flange (Required)

The product used is the same as the upgrade tool for the MELSEC-A/MELSEC-Q series. The support flange secures the bottom of the conversion adapter. One support flange is required per base unit.

Note

●For panel surface installation, drilling screw holes (M4 screw, 2 locations) is required. Drilling screw holes is not required when a base adapter is used.

Conversion adapter support flange model	Specifications	Page
ERNT-AQF12	12-slot conversion adapter support flange	**7-29 to 7-30**
ERNT-AQF8	8-slot conversion adapter support flange	
ERNT-AQF5	5-slot conversion adapter support flange	
ERNT-AQF3	3-slot conversion adapter support flange	

3 Base Adapter

The product used is the same as the upgrade tool for the MELSEC-A/MELSEC-Q series. Both the MELSEC-Q series base unit and the conversion adapter support flange can be installed on the base adapter without drilling screw holes. For the base unit models marked with *1 to *5, two or more base adapter models are applicable. Select the most suitable base adapter according to the product dimensions.

Note

●The user has to drill screw holes (M5 screw, 4 locations) and obtain four M5 screws for panel surface installation.

Base adapter model	Mountable product						Product dimensions	Page
	MELSEC-Q series base unit					Conversion adapter support flange	Width x Height (mm)	
	12 slots	8 slots	5 slots	3 slots	2 slots			
ERNT-AQB38	Q312B					**ERNT-AQF12,ERNT-AQF8**	480×240	**7-31 to 7-32**
		Q38B(*1)				**ERNT-AQF8**		
ERNT-AQB35		Q38B(*1)				**ERNT-AQF8,ERNT-AQF5**	382×240	
			Q35B			**ERNT-AQF5**		
ERNT-AQB32				Q33B		**ERNT-AQF3**	247×240	
ERNT-AQB68	Q612B					**ERNT-AQF12,ERNT-AQF8**	466×240	
		Q68B(*2)				**ERNT-AQF8**		
ERNT-AQB65		Q68B(*2)				**ERNT-AQF8,ERNT-AQF5**	352×240	
			Q65B(*3) Q55B(*4)			**ERNT-AQF5**		
ERNT-AQB62				Q63B	Q52B(*5)	**ERNT-AQF3**	238×240	
ERNT-AQB58		Q68B(*2)				**ERNT-AQF8**	411×240	
ERNT-AQB55			Q65B(*3) Q55B(*4)			**ERNT-AQF5**	297×240	
ERNT-AQB52					Q52B(*5)	**ERNT-AQF3**	183×240	

Universal Conversion Adapter

Specifications

38-point terminal block specifications(common to ERNT-AQTB20, ERNT-AQTB20-S1, ERNT-AQTB38, ERNT-AQTB38-E)

●Applicable solderless terminal

Unit: mm

Round non-insulated solderless terminal

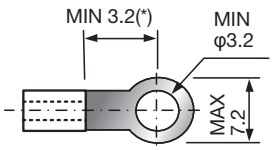

Round insulated solderless terminal

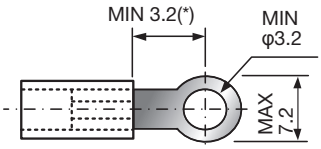

Y-shaped non-insulated solderless terminal

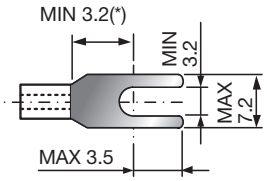

Y-shaped insulated solderless terminal

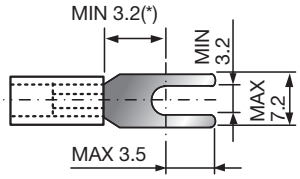

*The minimum length is 4.75 mm when the solderless terminal is attached up side down as shown on the right.

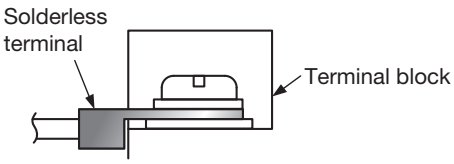

●Terminal block shape

Unit: mm

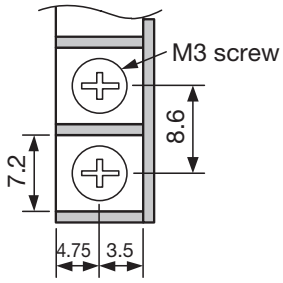

(1) ERNT-AQTB20

Connection diagram

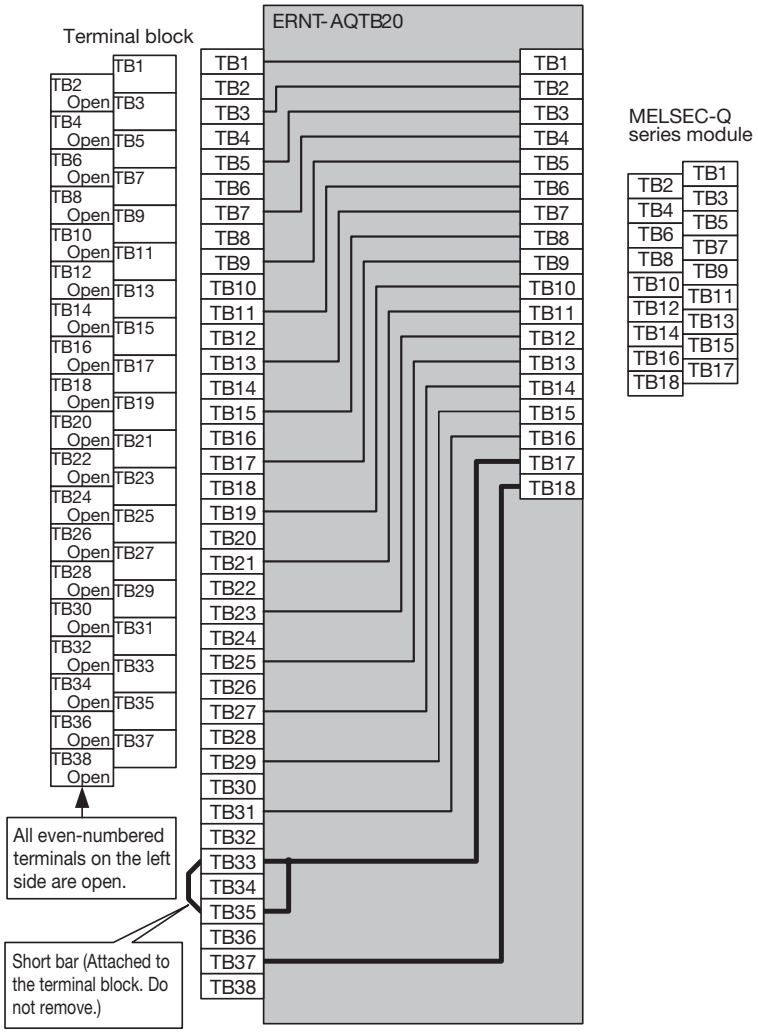

Input module

MELSEC-Q module to be used	External connection diagram	MELSEC-Q module specifications
QX10 + ERNT-AQTB20	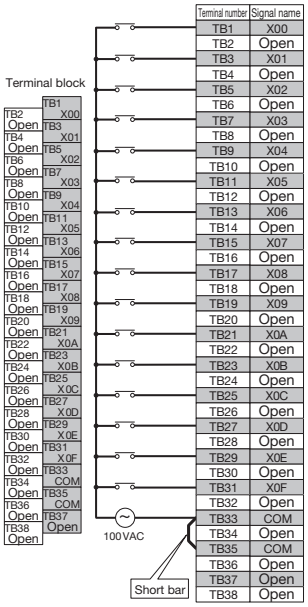	

Specifications \ Model		QX10
No. of input points		16 points
Isolation method		Photocoupler isolation
Rated input voltage		100-120VAC (+10/-15%) 50/60Hz (±3Hz)
Rated input current		Approx. 8mA (100VAC, 60Hz) Approx. 7mA (100VAC, 50Hz)
Inrush current		200mA, maximum, within 1ms (132VAC)
ON voltage / ON current		80VAC or more / 5mA or more (50Hz, 60Hz)
OFF voltage / OFF current		30VAC or less / 1.7mA or less (50Hz, 60Hz)
Input impedance		Approx. 12kΩ (60Hz) Approx. 15kΩ (50Hz)
Response time	OFF→ON	15ms or less (100VAC 50Hz, 60Hz)
	ON→OFF	20ms or less (100VAC 50Hz, 60Hz)
Internal current consumption		50mA (TYP. All points ON)
Wiring method for common		16 points/common

MELSEC-Q module to be used	External connection diagram	MELSEC-Q module specifications

QX28 + ERNT-AQTB20

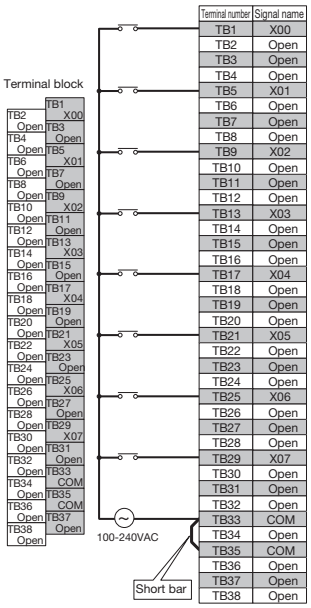

Specifications \ Model		QX28
No. of input points		8 points
Isolation method		Photocoupler isolation
Rated input voltage		100-240VAC (+10/-15%) 50/60Hz (±3Hz)
Rated input current		Approx. 17mA (200VAC, 60Hz), Approx. 14mA (200VAC, 50Hz) Approx. 8mA (100VAC, 60Hz), Approx. 7mA (100VAC, 50Hz)
Inrush current		950mA, maximum, within 1ms (264VAC)
ON voltage / ON current		80VAC or more / 5mA or more (50Hz, 60Hz)
OFF voltage / OFF current		30VAC or less / 1.7mA or less (50Hz, 60Hz)
Input impedance		Approx 12kΩ (60Hz) Approx 15kΩ (50Hz)
Response time	OFF→ON	10ms or less (100VAC 50Hz, 60Hz)
	ON→OFF	15ms or less (100VAC 50Hz, 60Hz)
Internal current consumption		50mA (TYP. All points ON)
Wiring method for common		8 points/common

QX40 QX40-S1 + ERNT-AQTB20

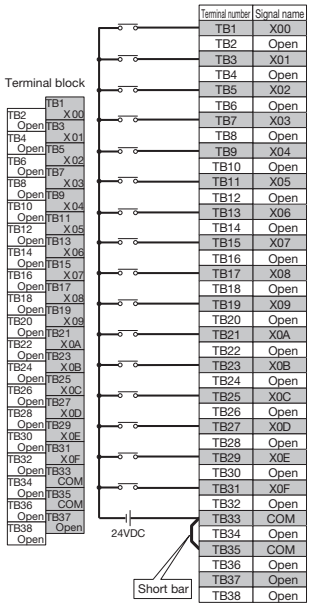

Specifications \ Model		QX40 (positive common)	QX40-S1 (positive common)
No. of input points		16 points	16 points
Isolation method		Photocoupler isolation	Photocoupler isolation
Rated input voltage		24VDC (+20/-15%)	24VDC (+20/-15%)
Rated input current		Approx. 4mA	Approx. 6mA
ON voltage / ON current		19V or more / 3mA or more	19V or more / 4.0mA or more
OFF voltage / OFF current		11V or less /1.7mA or less	11V or less / 1.7mA or less
Input resistance		Approx. 5.6kΩ	Approx. 3.9kΩ
Response time	OFF→ON	1/5/10/20/70ms or less	0.1/0.2/0.4/0.6/1ms or less
	ON→OFF	1/5/10/20/70ms or less	0.1/0.2/0.4/0.6/1ms or less
Internal current consumption		50mA (TYP. All points ON)	60mA (TYP. All points ON)
Wiring method for common		16 points/common	16 points/common

QX40H + ERNT-AQTB20

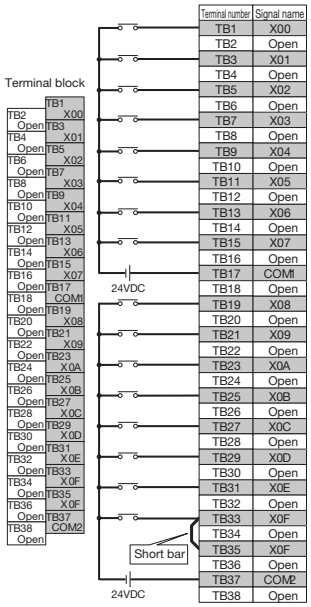

Specifications \ Model		QX40H (positive common)
No. of input points		16 points
Isolation method		Photocoupler isolation
Rated input voltage		24VDC(+20/-15%)
Rated input current		Approx. 6mA
ON voltage / ON current		13V or more / 3mA or more
OFF voltage / OFF current		8V or less / 1.6mA or less
Input resistance		Approx. 3.9kΩ
Response time	OFF→ON	0.1/0.2/0.4/0.6/1ms or less
	ON→OFF	0.1/0.2/0.4/0.6/1ms or less
Internal current consumption		80mA (TYP. All points ON)
Wiring method for common		8 points/common

MELSEC-Q module to be used	External connection diagram	MELSEC-Q module specifications

QX50 + ERNT-AQTB20

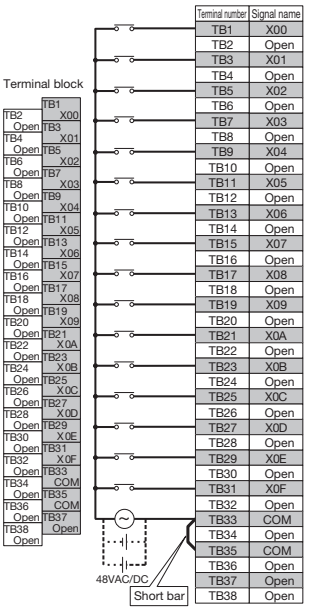

Specifications \ Model	QX50 (positive common/negative common shared type, AC)	
No. of input points	16 points	
Isolation method	Photocoupler isolation	
Rated input voltage	48VDC (+20/-15%)	48VAC (+10/-15%) 50/60Hz (±3Hz)
Rated input current	Approx. 4mA	
ON voltage / ON current	28V or more / 2.5mA or more	
OFF voltage / OFF current	10V or less / 1.0mA or less	
Input resistance	Approx. 11.2kΩ	
Response time OFF→ON	5ms or less	15ms or less
Response time ON→OFF	20ms or less	20ms or less
Internal current consumption	50mA (TYP. All points ON)	
Wiring method for common	16 points/common	

QX70 + ERNT-AQTB20

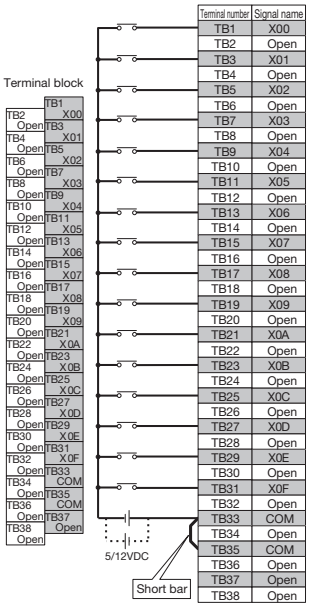

Specifications \ Model	QX70 (positive common/negative common shared type)	
No. of input points	16 points	
Isolation method	Photocoupler isolation	
Rated input voltage	5VDC (+20/-10%)	12VDC (+20/-15%)
Rated input current	Approx. 1.2mA	Approx. 3.3mA
ON voltage / ON current	3.5V or more / 1mA or more	
OFF voltage / OFF current	1V or less/0.1mA or less	
Input resistance	Approx. 3.3kΩ	
Response time OFF→ON	1/5/10/20/70ms or less	
Response time ON→OFF	1/5/10/20/70ms or less	
Internal current consumption	55mA (TYP. All points ON)	
Wiring method for common	16 points/common	

QX70H + ERNT-AQTB20

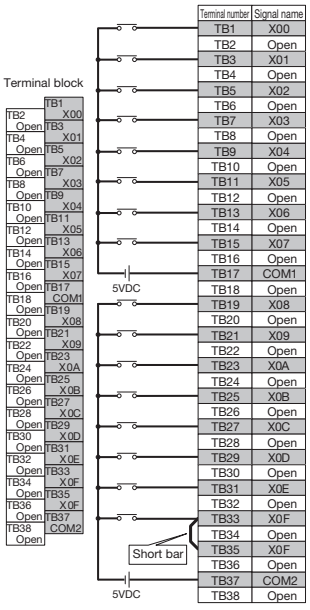

Specifications \ Model	QX70H (positive common)	
No. of input points	16 points	
Isolation method	Photocoupler isolation	
Rated input voltage	5VDC (+20/-15%)	
Rated input current	Approx. 6mA	
ON voltage / ON current	3.5V or more / 3mA or more	
OFF voltage / OFF current	1V or less/1mA or less	
Input resistance	Approx. 470Ω	
Response time OFF→ON	0.1/0.2/0.4/0.6/1ms or less	
Response time ON→OFF	0.1/0.2/0.4/0.6/1ms or less	
Internal current consumption	80mA(TYP. All points ON)	
Wiring method for common	8 points/common	

MELSEC-Q module to be used	External connection diagram	MELSEC-Q module specifications

QX80 + ERNT-AQTB20

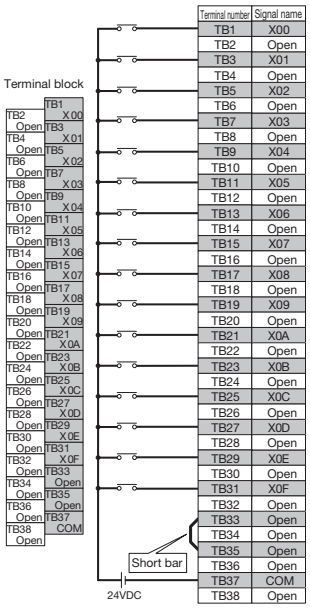

Specifications \ Model	QX80 (negative common)
No. of input points	16 points
Isolation method	Photocoupler isolation
Rated input voltage	24VDC(+20/-15%)
Rated input current	Approx. 4mA
ON voltage / ON current	19V or more / 3mA or more
OFF voltage / OFF current	11V or less / 1.7mA or less
Input resistance	Approx. 5.6kΩ
Response time OFF→ON	1/5/10/20/70ms or less
Response time ON→OFF	1/5/10/20/70ms or less
Internal current consumption	50mA (TYP. All points ON)
Wiring method for common	16 points/common

QX80H + ERNT-AQTB20

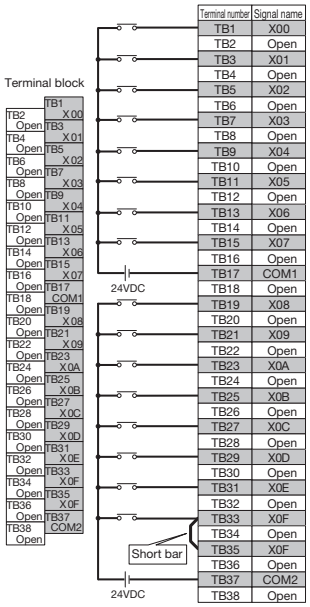

Specifications \ Model	QX80H (negative common)
No. of input points	16 points
Isolation method	Photocoupler isolation
Rated input voltage	24VDC(+20/-15%)
Rated input current	Approx. 6mA
ON voltage / ON current	13V or more / 3mA or more
OFF voltage / OFF current	8V or less / 1.6mA or less
Input resistance	Approx. 3.9kΩ
Response time OFF→ON	0.1/0.2/0.4/0.6/1ms or less
Response time ON→OFF	0.1/0.2/0.4/0.6/1ms or less
Internal current consumption	80mA (TYP. All points ON)
Wiring method for common	8 points/common

QX90H + ERNT-AQTB20

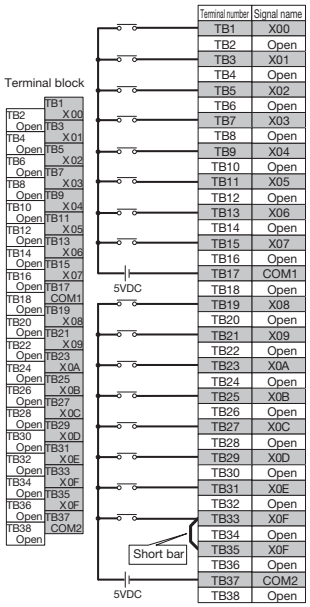

Specifications \ Model	QX90H (negative common)
No. of input points	16 points
Isolation method	Photocoupler isolation
Rated input voltage	5VDC(+20/-15%)
Rated input current	Approx. 6mA
ON voltage / ON current	3.5V or more / 3mA or more
OFF voltage / OFF current	1V or less / 1mA or less
Input resistance	Approx. 470Ω
Response time OFF→ON	0.1/0.2/0.4/0.6/1ms or less
Response time ON→OFF	0.1/0.2/0.4/0.6/1ms or less
Internal current consumption	80mA (TYP. All points ON)
Wiring method for common	8 points/common

Output module

MELSEC-Q module to be used	External connection diagram	MELSEC-Q module specifications

QY10 + ERNT-AQTB20

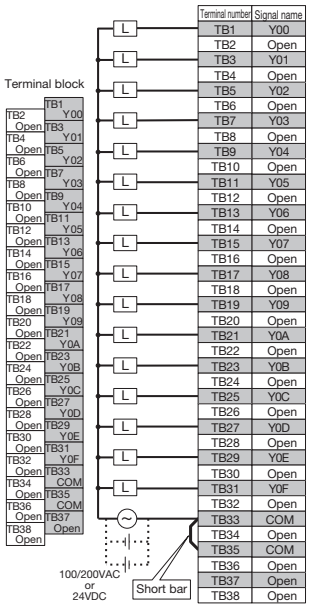

Specifications \ Model	QY10
No. of output points	16 points
Isolation method	Relay isolation
Rated switching voltage/current	24VDC/2A (resistance load) / point 240VAC/2A (COSΦ=1) / point 8A/common
Minimum switching load	5VDC 1mA
Maximum switching load	264VAC 125VDC
Response time OFF→ON	10ms or less
Response time ON→OFF	12ms or less
Surge suppressor	No
Fuse	No
Internal current consumption	430mA (TYP. All points ON)
Wiring method for common	16 points/common

QY18A + ERNT-AQTB20

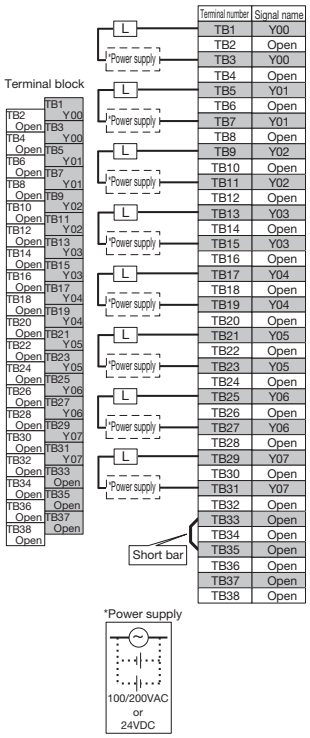

Specifications \ Model	QY18A
No. of output points	8 points
Isolation method	Relay isolation
Rated switching voltage/current	24VDC/2A (resistance load) / point 240VAC/2A (COSΦ=1) / point 8A/common
Minimum switching load	5VDC 1mA
Maximum switching load	264VAC 125VDC
Response time OFF→ON	10ms or less
Response time ON→OFF	12ms or less
Surge suppressor	No
Fuse	No
Internal current consumption	240mA (TYP. All points ON)
Wiring method for common	All points independent

MELSEC-Q module to be used	External connection diagram	MELSEC-Q module specifications

QY40P / QY50 + ERNT-AQTB20

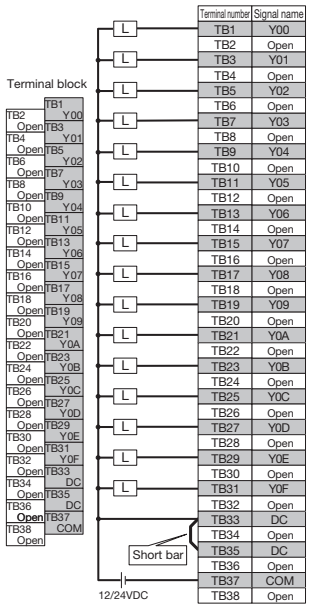

Specifications \ Model		QY40P (Sink type)	QY50 (Sink type)
No. of output points		16 points	16 points
Isolation method		Photocoupler isolation	Photocoupler isolation
Rated load voltage		12-24VDC(+20/-15%)	12-24VDC(+20/-15%)
Maximum load current		0.1A/point, 1.6A/common	0.5A/point, 4A/1A/common
Maximum inrush current		0.7A 10ms or less	4A 10ms or less
Leakage current at OFF		0.1mA or less	0.1mA or less
Maximum voltage drop at ON		0.1VDC(TYP.)0.1A 0.2VDC(MAX.)0.1A	0.2VDC(TYP.)0.5A 0.3VDC(MAX.)0.5A
Response time	OFF→ON	1ms or less	1ms or less
	ON→OFF	1ms or less (rated load, resistance load)	1ms or less (rated load, resistance load)
Surge suppressor		Zener diode	Zener diode
Fuse		None	6.7A (not replaceable) (fuse breaking capacity: 50A)
Protection function		Yes (overload protection and overheat protection)	None
Internal current consumption		65mA (TYP. All points ON)	80mA (TYP. All points ON)
Wiring method for common		16 points/common	16 points/common

QY68A + ERNT-AQTB20

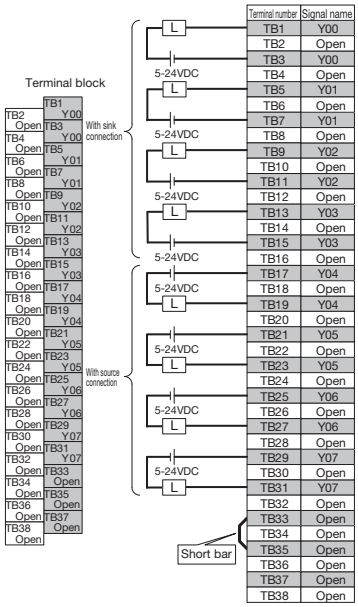

Specifications \ Model		QY68A (Sink/Source type)
No. of output points		8 points
Isolation method		Photocoupler isolation
Rated load voltage		5-24VDC(+20/-10%)
Maximum load current		2A/point, 8A/module
Maximum inrush current		8A 10ms or less
Leakage current at OFF		0.1mA or less
Maximum voltage drop at ON		0.3VDC(MAX.)2A
Response time	OFF→ON	3ms or less
	ON→OFF	10ms or less(resistance load)
Surge suppressor		Zener diode
Fuse		None
Protection function		None
Internal current consumption		110mA (TYP. All points ON)
Wiring method for common		All points independent

QY70 + ERNT-AQTB20

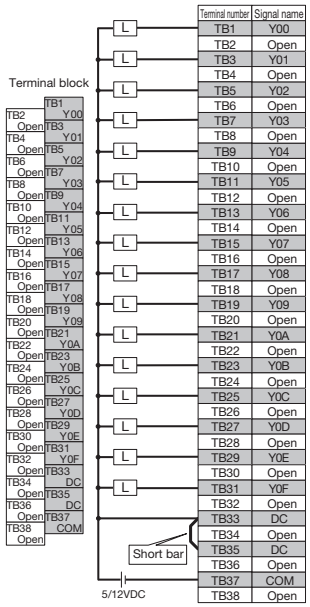

Specifications \ Model		QY70 (Sink type)
No. of output points		16 points
Isolation method		Photocoupler isolation
Rated load voltage		5-12VDC(+25/-10%)
Maximum load current		16mA/point, 256mA/common
Maximum inrush current		40mA 10ms or less
Leakage current at OFF		V_{OH}:3.5VDC (V_{CC}=5VDC,I_{OH}=0.4mA)
Maximum voltage drop at ON		V_{OL}:0.3VDC
Response time	OFF→ON	0.5ms or less
	ON→OFF	0.5ms or less(resistance load)
Surge suppressor		None
Fuse		1.6A (not replaceable) (fuse breaking capacity: 50A)
Protection function		None
Internal current consumption		95mA (MAX. All points ON)
Wiring method for common		16 points/common

MELSEC-Q module to be used	External connection diagram	MELSEC-Q module specifications
QY80 + ERNT-AQTB20	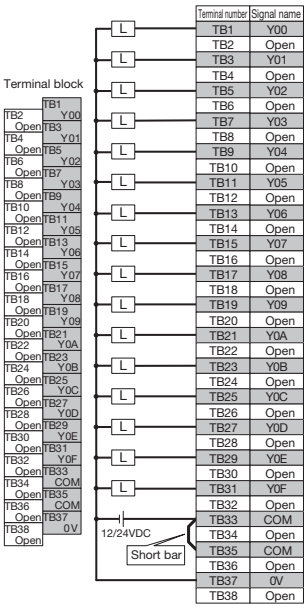	See table below

Specifications \ Model		QY80 (Source type)
No. of output points		16 points
Isolation method		Photocoupler isolation
Rated load voltage		12-24VDC(+20/-15%)
Maximum load current		0.5A/point, 4A/common
Maximum inrush current		4A 10ms or less
Leakage current at OFF		0.1mA or less
Maximum voltage drop at ON		0.2VDC(TYP.)0.5A 0.3VDC(MAX.)0.5A
Response time	OFF→ON	1ms or less
	ON→OFF	1ms or less(rated load, resistance load)
Surge suppressor		Zener diode
Fuse		6.7A (not replaceable) (fuse breaking capacity: 50A)
Protection function		None
Internal current consumption		80mA (TYP. All points ON)
Wiring method for common		16 points/common

I/O combined module

MELSEC-Q module to be used	External connection diagram	MELSEC-Q module specifications
QX48Y57 + ERNT-AQTB20	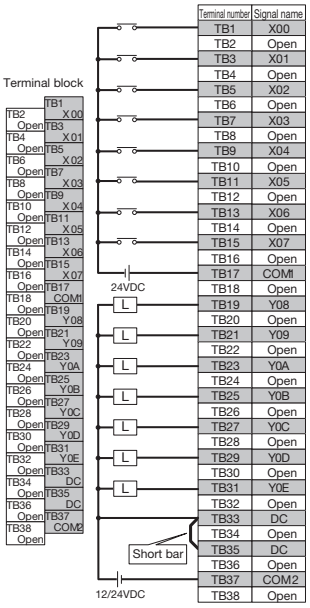	See tables below

<Input specifications>

Specifications \ Model		QX48Y57 (positive common)
No. of input points		8 points
Isolation method		Photocoupler isolation
Rated input voltage		24VDC(+20/-15%)
Rated input current		Approx. 4mA
ON voltage / ON current		19V or less / 3mA or less
OFF voltage / OFF current		11V or less / 1.7mA or less
Input resistance		Approx. 5.6kΩ
Response time	OFF→ON	1/5/10/20/70ms or less
	ON→OFF	1/5/10/20/70ms or less
Internal current consumption		80mA (TYP. All points ON)
Wiring method for common		8 points/common

<Output specifications>

Specifications \ Model		QX48Y57 (Sink type)
No. of output points		7 points
Isolation method		Photocoupler isolation
Rated load voltage		12-24VDC(+20/-15%)
Maximum load current		0.5A/point, 2A/common
Maximum inrush current		4A 10ms or less
Leakage current at OFF		0.1mA or less
Maximum voltage drop at ON		0.2VDC(TYP.)0.5A 0.3VDC(MAX.)0.5A
Response time	OFF→ON	1ms or less
	ON→OFF	1ms or less(rated load, resistance load)
Surge suppressor		Zener diode
Fuse		4A (not replaceable) (fuse breaking capacity: 50A)
Protection function		None
Wiring method for common		7 points/common

(2)ERNT-AQTB20-S1

Connection diagram

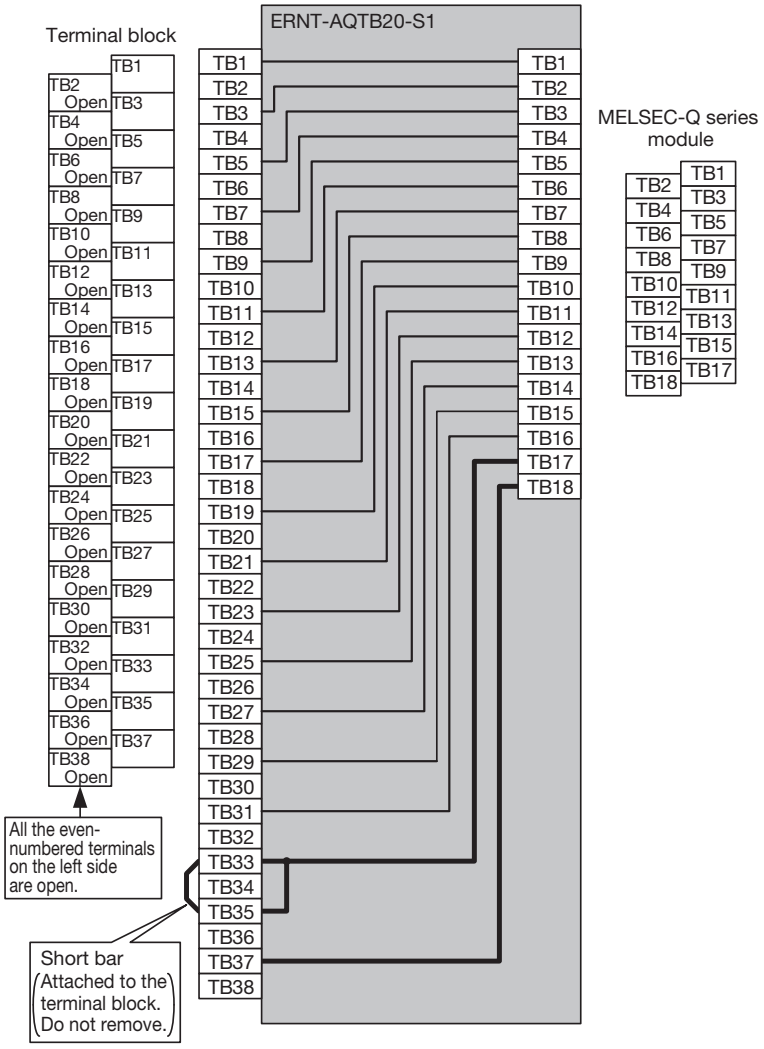

Output module

MELSEC-Q module to be used	External connection diagram	MELSEC-Q module specifications
QY22 + ERNT-AQTB20-S1	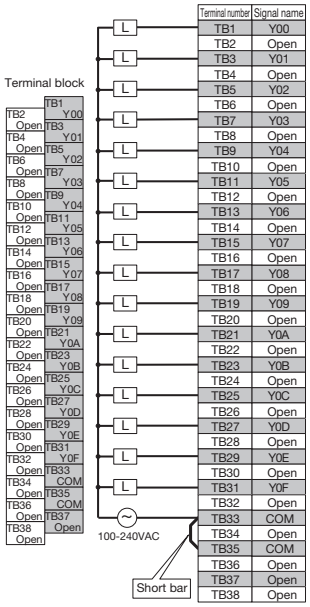	

Terminal number	Signal name
TB1	Y00
TB2	Open
TB3	Y01
TB4	Open
TB5	Y02
TB6	Open
TB7	Y03
TB8	Open
TB9	Y04
TB10	Open
TB11	Y05
TB12	Open
TB13	Y06
TB14	Open
TB15	Y07
TB16	Open
TB17	Y08
TB18	Open
TB19	Y09
TB20	Open
TB21	Y0A
TB22	Open
TB23	Y0B
TB24	Open
TB25	Y0C
TB26	Open
TB27	Y0D
TB28	Open
TB29	Y0E
TB30	Open
TB31	Y0F
TB32	Open
TB33	COM
TB34	Open
TB35	COM
TB36	Open
TB37	Open
TB38	Open

Specifications \ Model		QY22
No. of output points		16 points
Isolation method		Photocoupler isolation
Rated load voltage		100-240VAC 50/60Hz±5%
Maximum load current		0.6A/point, 4.8/common
Maximum inrush current		20A, one cycle or less
Leakage current at OFF		3mA or less (240V 60Hz) 1.5mA or less(120V 60Hz)
Maximum voltage drop at ON		1.5V or less
Response time	OFF→ON	1ms + 0.5 cycles or less
	ON→OFF	1ms + 0.5 cycles or less (rated load, resistance load)
Surge suppressor		CR absorber
Fuse		No
Internal current consumption		250mA (MAX. All points ON)
Wiring method for common		16 points/common

(3)ERNT-AQTB38

Connection diagram

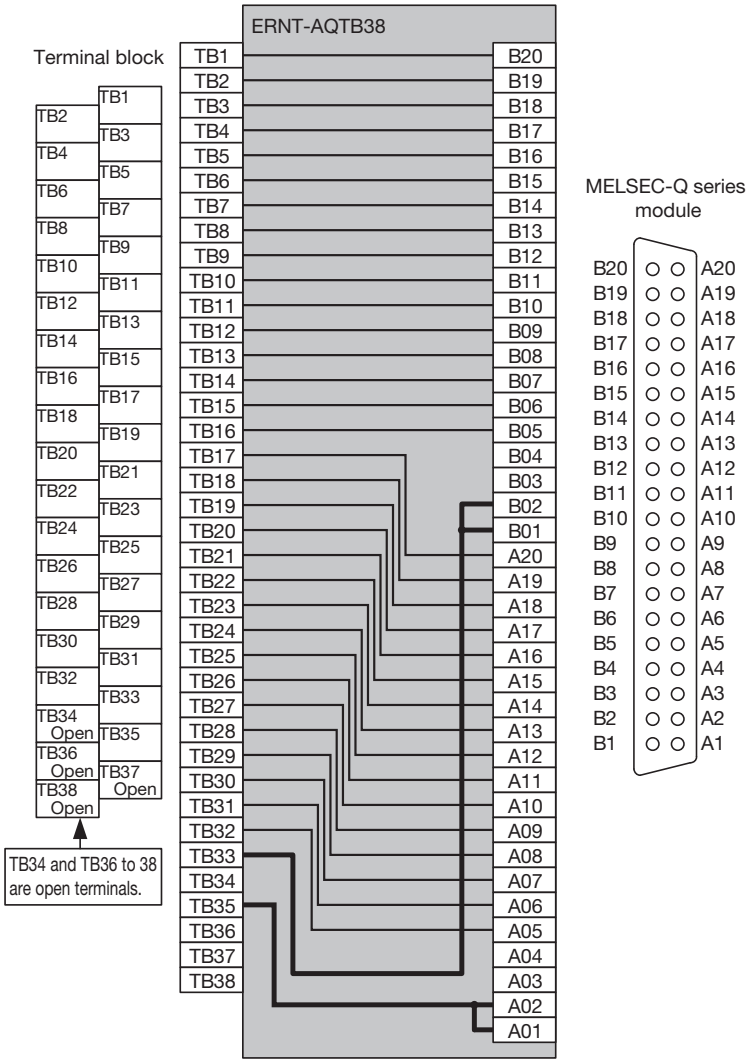

Input module

MELSEC-Q module to be used	External connection diagram	MELSEC-Q module specifications

QX41
QX41-S1
QX41-S2
+
ERNT-AQTB38

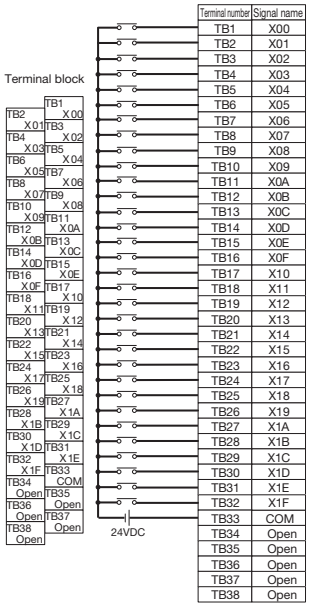

Specifications \ Model		QX41 (positive common)	QX41-S1 (positive common)	QX41-S2 (positive common)
No. of input points		32 points	32 points	32 points
Isolation method		Photocoupler isolation	Photocoupler isolation	Photocoupler isolation
Rated input voltage		24VDC(+20/-15%)	24VDC(+20/-15%)	24VDC(+20/-15%)
Rated input current		Approx. 4mA	Approx. 4mA	Approx. 6mA
ON voltage / ON current		19V or more / 3mA or more	19V or more / 3mA or more	15V or more / 3mA or more
OFF voltage / OFF current		11V or less / 1.7mA or less	9.5V or less / 1.5mA or less	5V or less / 1.7mA or less
Input resistance		Approx. 5.6kΩ	Approx. 5.6kΩ	Approx. 3.6kΩ
Response time	OFF→ON	1/5/10/20/70ms or less	0.1/0.2/0.4/0.6/1ms or less	1/5/10/20/70ms or less
	ON→OFF	1/5/10/20/70ms or less	0.1/0.2/0.4/0.6/1ms or less	1/5/10/20/70ms or less
Internal current consumption		75mA (TYP. All points ON)	75mA (TYP. All points ON)	75mA (TYP. All points ON)
Wiring method for common		32 points/common	32 points/common	32 points/common

MELSEC-Q module to be used	External connection diagram	MELSEC-Q module specifications
QX71 + ERNT-AQTB38	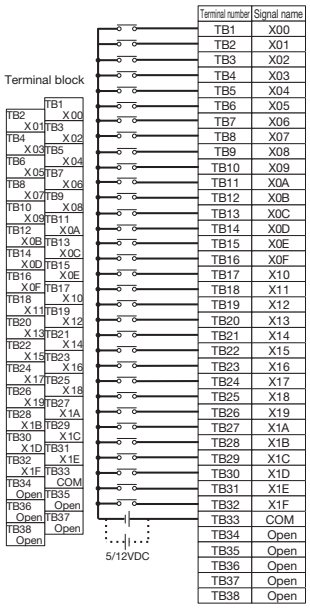	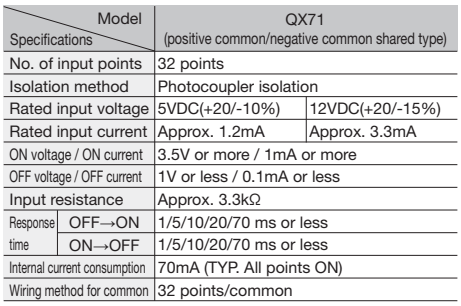

Specifications \ Model	QX71 (positive common/negative common shared type)	
No. of input points	32 points	
Isolation method	Photocoupler isolation	
Rated input voltage	5VDC(+20/-10%)	12VDC(+20/-15%)
Rated input current	Approx. 1.2mA	Approx. 3.3mA
ON voltage / ON current	3.5V or more / 1mA or more	
OFF voltage / OFF current	1V or less / 0.1mA or less	
Input resistance	Approx. 3.3kΩ	
Response time: OFF→ON	1/5/10/20/70 ms or less	
Response time: ON→OFF	1/5/10/20/70 ms or less	
Internal current consumption	70mA (TYP. All points ON)	
Wiring method for common	32 points/common	

Output module

MELSEC-Q module to be used	External connection diagram	MELSEC-Q module specifications
QY41P + ERNT-AQTB38	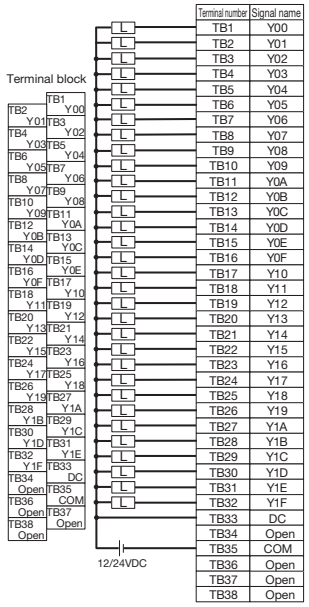	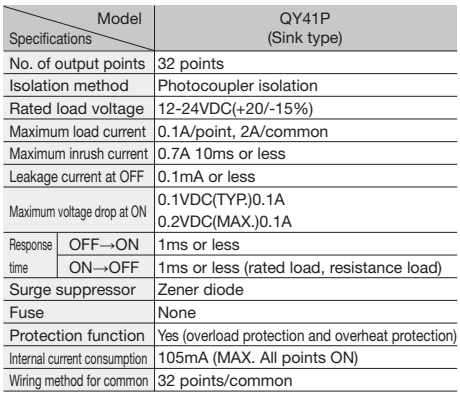

Specifications \ Model	QY41P (Sink type)
No. of output points	32 points
Isolation method	Photocoupler isolation
Rated load voltage	12-24VDC(+20/-15%)
Maximum load current	0.1A/point, 2A/common
Maximum inrush current	0.7A 10ms or less
Leakage current at OFF	0.1mA or less
Maximum voltage drop at ON	0.1VDC(TYP.)0.1A 0.2VDC(MAX.)0.1A
Response time: OFF→ON	1ms or less
Response time: ON→OFF	1ms or less (rated load, resistance load)
Surge suppressor	Zener diode
Fuse	None
Protection function	Yes (overload protection and overheat protection)
Internal current consumption	105mA (MAX. All points ON)
Wiring method for common	32 points/common

MELSEC-Q module to be used	External connection diagram	MELSEC-Q module specifications

QY41H + ERNT-AQTB38

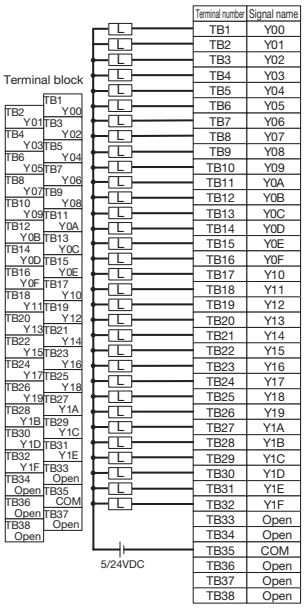

Specifications \ Model		QY41H (Sink type)
No. of output points		32 points
Isolation method		Photocoupler isolation
Rated load voltage		5-24VDC(+20/-15%)
Maximum load current		0.2A/point, 2A/common
Maximum inrush current		0.7A 10ms or less
Leakage current at OFF		0.1mA or less
Maximum voltage drop at ON		0.1VDC(TYP.)0.1A 0.2VDC(MAX.)0.1A
Response time	OFF→ON	2μs or less
	ON→OFF	2μs or less (rated load, resistance load)
Surge suppressor		Zener diode
Fuse		None
Protection function		None
Internal current consumption		370mA (TYP. All points ON)
Wiring method for common		32 points/common

QY71 + ERNT-AQTB38

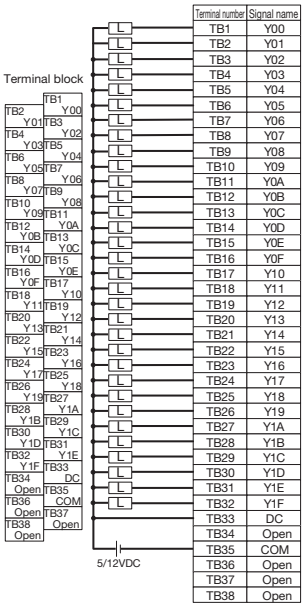

Specifications \ Model		QY71 (Sink type)
No. of output points		32 points
Isolation method		Photocoupler isolation
Rated load voltage		5-12VDC(+25/-10%)
Maximum load current		16mA/point, 512mA/common
Maximum inrush current		40mA 10ms or less
Leakage current at OFF		V_{OH}:3.5VDC (Vcc=5VDC,I_{OH}=0.4mA)
Maximum voltage drop at ON		V_{OL}:0.3VDC
Response time	OFF→ON	0.5ms or less
	ON→OFF	0.5ms or less(resistance load)
Surge suppressor		None
Fuse		1.6A (not replaceable) (Fuse breaking capacity: 50A)
Protection function		None
Internal current consumption		150mA (TYP. All points ON)
Wiring method for common		32 points/common

(4)ERNT-AQTB38-E

Connection diagram

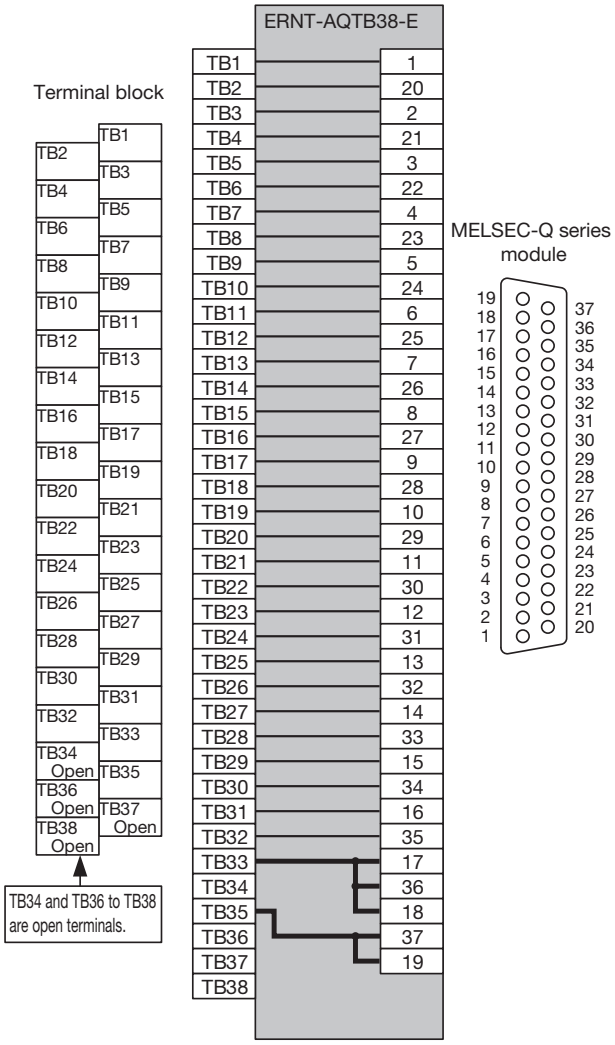

Input module

MELSEC-Q module to be used	External connection diagram	MELSEC-Q module specifications

QX81
QX81-S2
+
ERNT-AQTB38-E

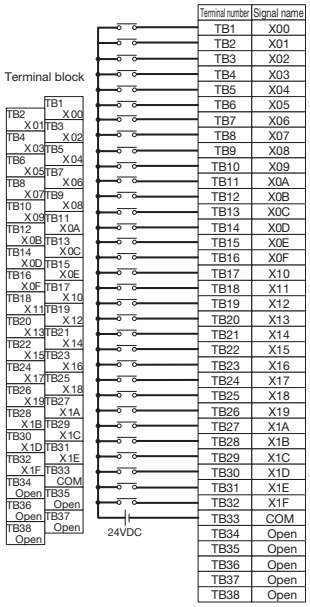

Specifications \ Model		QX81 (negative common)	QX81-S2 (negative common)
No. of input points		32 points	32 points
Isolation method		Photocoupler isolation	Photocoupler isolation
Rated input voltage		24VDC(+20/-15%)	24VDC(+20/-15%)
Rated input current		Approx. 4mA	Approx. 6mA
ON voltage / ON current		19V or more / 3mA or more	15V or more / 3mA or more
OFF voltage / OFF current		11V or less / 1.7mA or less	5V or less / 1.7mA or less
Input resistance		Approx. 5.6kΩ	Approx. 3.6kΩ
Response time	OFF→ON	1/5/10/20/70ms or less	1/5/10/20/70ms or less
	ON→OFF	1/5/10/20/70ms or less	1/5/10/20/70ms or less
Internal current consumption		75mA (TYP. All points ON)	75mA (TYP. All points ON)
Wiring method for common		32 points/common	32 points/common

Output module

MELSEC-Q module to be used	External connection diagram	MELSEC-Q module specifications

QY81P
+
ERNT-AQTB38-E

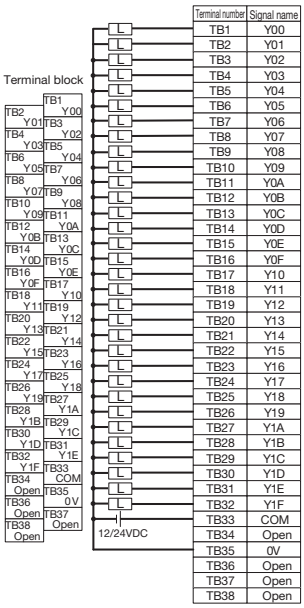

Specifications \ Model		QY81P (Source type)
No. of output points		32 points
Isolation method		Photocoupler isolation
Rated load voltage		12-24VDC(+20/-15%)
Maximum load current		0.1A/point, 2A/common
Maximum inrush current		0.7A 10ms or less
Leakage current at OFF		0.1mA or less
Maximum voltage drop at ON		0.1VDC(TYP.)0.1A 0.2VDC(MAX.)0.1A
Response time	OFF→ON	1ms or less
	ON→OFF	1ms or less (rated load, resistance load)
Surge suppressor		Zener diode
Fuse		None
Protection function		Yes (overload protection and overheat protection)
Internal current consumption		95mA (TYP. All points ON)
Wiring method for common		32 points/common

Conversion Adapter Support Flange (Required)

Specifications

The conversion adapter support flange secures the bottom of the conversion adapter and is thus required during conversion adapter use. One support flange is required per base unit. The product used is the same as the upgrade tool for the MELSEC-A/MELSEC-Q series.

Conversion adapter support flange model	Specifications
ERNT-AQF12	Conversion adapter support flange for 12-slot MELSEC-Q series modules
ERNT-AQF8	Conversion adapter support flange for 8-slot MELSEC-Q series modules
ERNT-AQF5	Conversion adapter support flange for 5-slot MELSEC-Q series modules
ERNT-AQF3	Conversion adapter support flange for 3-slot MELSEC-Q series modules

When the base adapter is not used

When the base adapter is not used, drilling screw holes (M4 screw, 2 locations) is required for attaching the conversion adapter support flange as shown below. Be sure to always use the conversion adapter support flange.

When a main base unit is used

◎For Q312B, Q38B, Q35B, and Q33B

Unit: mm

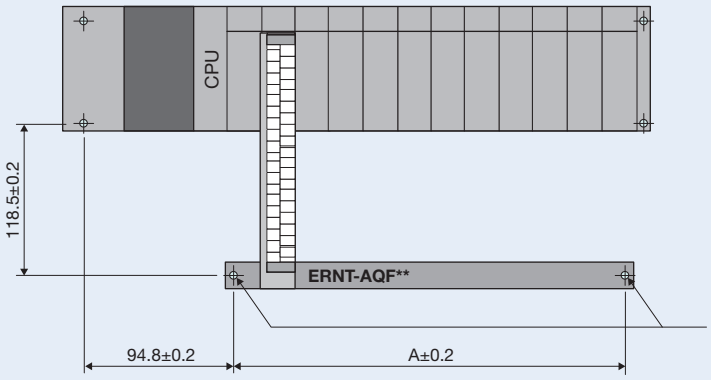

Conversion adapter support flange	A
ERNT-AQF12	321.2
ERNT-AQF8	210
ERNT-AQF5	126.6
ERNT-AQF3	71

Drill screw holes (M4 screw, 2 locations), and install the conversion adapter support flange.

When an extension base unit is used

◎For Q612B, Q68B, Q65B, Q63B

Unit: mm

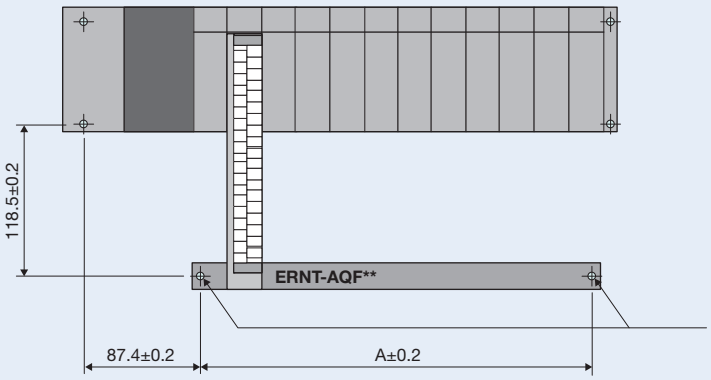

Conversion adapter support flange	A
ERNT-AQF12	321.2
ERNT-AQF8	210
ERNT-AQF5	126.6
ERNT-AQF3	71

Drill screw holes (M4 screw, 2 locations), and install the conversion adapter support flange.

◎For Q55B

Unit: mm

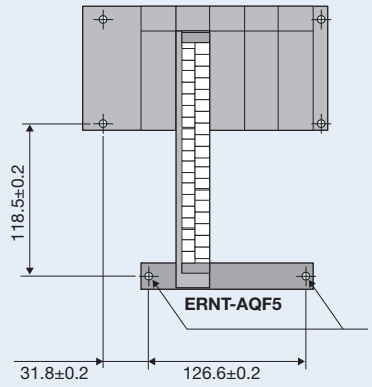

Drill screw holes (M4 screw, 2 locations), and install the conversion adapter support flange.

◎For Q52B

Unit: mm

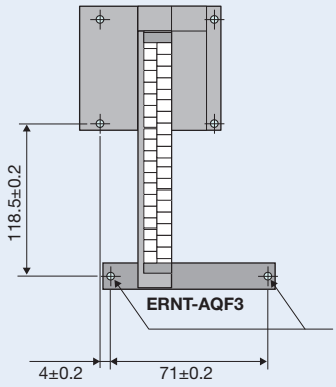

Drill screw holes (M4 screw, 2 locations), and install the conversion adapter support flange.

Base Adapter

Specifications

Both the MELSEC-Q series base unit and the conversion adapter support flange can be installed on the base adapter without drilling screw holes. The product used is the same as the upgrade tool for the MELSEC-A/MELSEC-Q series.

Note
- The user has to drill screw holes (M5 screw, 4 locations) and obtain four M5 screws for panel surface installation.

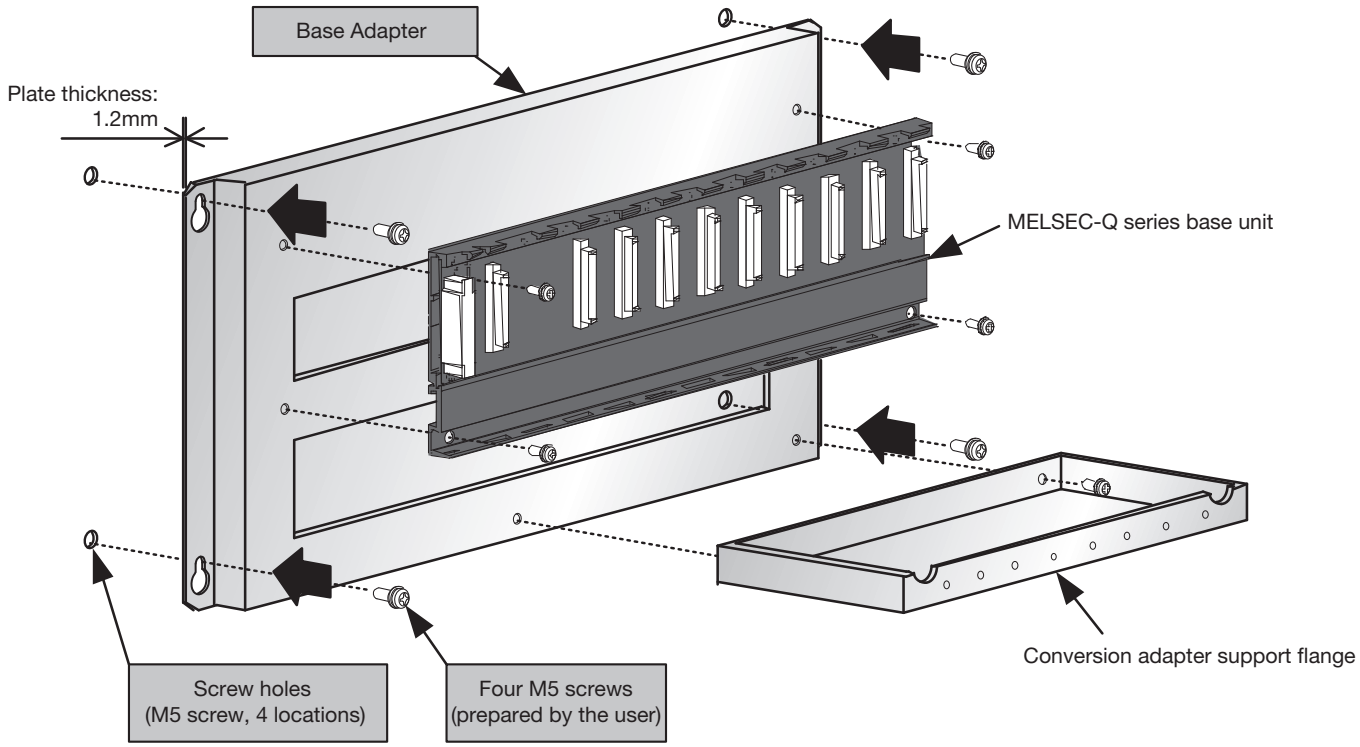

For the base unit models marked with *1 to *5, two or more base adapter models are applicable. Select the most suitable base adapter according to the product dimensions.

Base adapter model	Mountable product						Product dimensions
	MELSEC-Q series base unit					Conversion adapter support flange	Width x Height mm
	12 slots	8 slots	5 slots	3 slots	2 slots		
ERNT-AQB38	Q312B					ERNT-AQF12,ERNT-AQF8	480×240
		Q38B(*1)				ERNT-AQF8	
ERNT-AQB35		Q38B(*1)				ERNT-AQF8,ERNT-AQF5	382×240
			Q35B			ERNT-AQF5	
ERNT-AQB32				Q33B		ERNT-AQF3	247×240
ERNT-AQB68	Q612B					ERNT-AQF12,ERNT-AQF8	466×240
		Q68B(*2)				ERNT-AQF8	
ERNT-AQB65		Q68B(*2)				ERNT-AQF8,ERNT-AQF5	352×240
			Q65B(*3) Q55B(*4)			ERNT-AQF5	
ERNT-AQB62				Q63B	Q52B(*5)	ERNT-AQF3	238×240
ERNT-AQB58		Q68B(*2)				ERNT-AQF8	411×240
ERNT-AQB55			Q65B(*3) Q55B(*4)			ERNT-AQF5	297×240
ERNT-AQB52					Q52B(*5)	ERNT-AQF3	183×240

Mounting Dimensions

Unit: mm

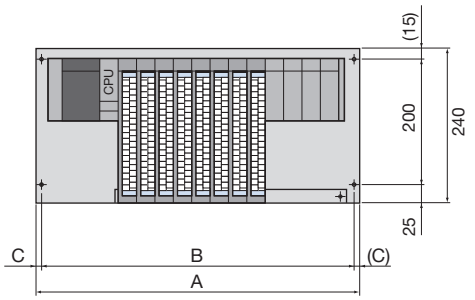

Base adapter model	A	B	C
ERNT-AQB38	480	460	10
ERNT-AQB68	466	446	10
ERNT-AQB58	411	391	10
ERNT-AQB35	382	362	10
ERNT-AQB65	352	332	10
ERNT-AQB55	297	277	10
ERNT-AQB32	247	227	10
ERNT-AQB62	238	218	10
ERNT-AQB52	183	163	10

Usage Precautions

Verify that the MELSEC-Q series module specifications satisfy the specifications of the existing connected devices.
Refer to the user's manual of the applicable MELSEC-Q series module.

Module Width

(1) The module width dimension is smaller (27.4 mm) and the wiring area is smaller, requiring verification during mounting.

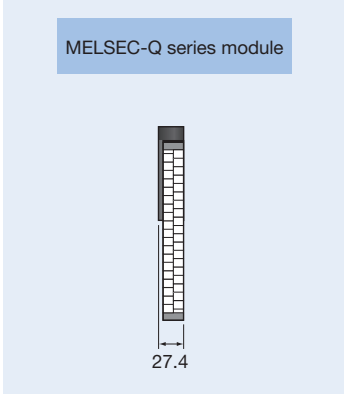

(2) If the wiring interferes with a mounted module, lift the wiring forward, etc., so that there is no interference.

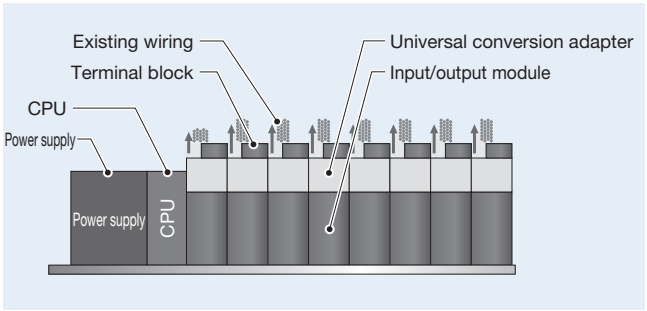

(3) If interference still occurs even when you lift the wiring, open up a slot to secure a space for wiring.

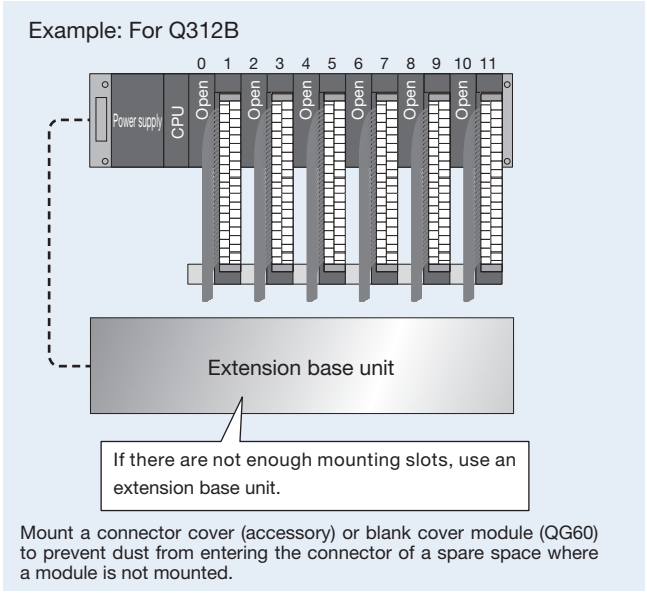

Mount a connector cover (accessory) or blank cover module (QG60) to prevent dust from entering the connector of a spare space where a module is not mounted.

(4) If replacement is not possible based on 2) or 3) on the left, consider using the Mitsubishi Electric Q series large type base unit.

7-7

Depth

The depth dimension is as shown below. The depth is larger, requiring verification during mounting. If a base adapter is not used, the dimension is the value in parentheses (11.8 mm smaller).

Universal conversion adapter	ERNT-AQTB20	ERNT-AQTB20-S1	ERNT-AQTB38 ERNT-AQTB38-E
Depth	153.9mm (142.1mm)	176.2mm (164.4mm)	165.3mm (153.5mm)
Mounting diagram	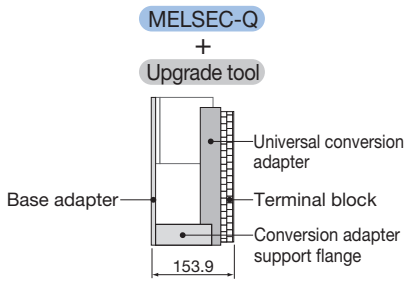	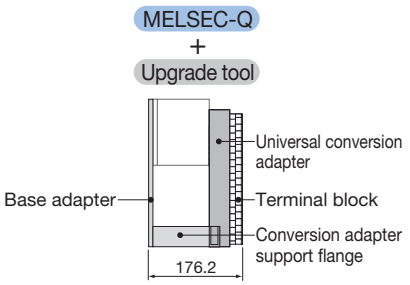	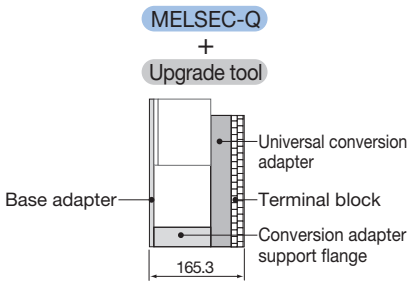

Conversion Adapter Support Flange / Base Adapter

When using the universal conversion adapter, always use a conversion adapter support flange.
Also, it is recommended to use a base adopter, which enables installation of both the MELSEC-Q series base unit and the conversion adapter support flange without drilling screw holes.

Slot Positions

When you use the MELSEC-Q series for replacement, the slot positions are as shown below. Change the slot positions where modules are mounted and adjust the wiring lengths prior to use.

(1)ERNT-AQB38

Unit: mm

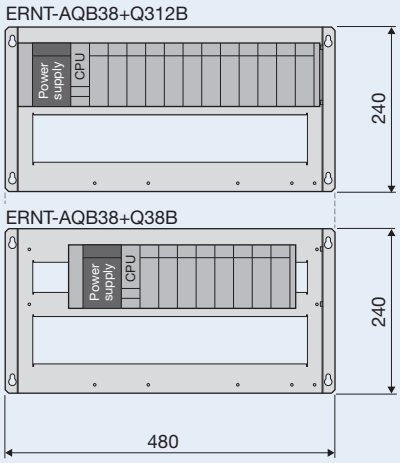

(2)ERNT-AQB35

Unit: mm

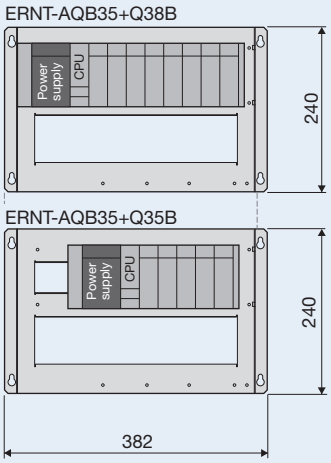

(3)ERNT-AQB32

Unit: mm

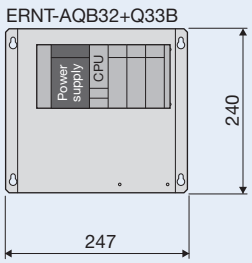

(4)ERNT-AQB68

Unit: mm

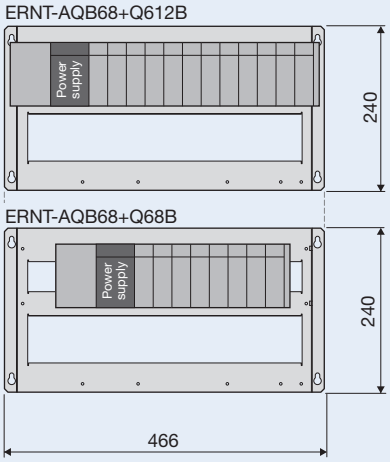

(5)ERNT-AQB65

Unit: mm

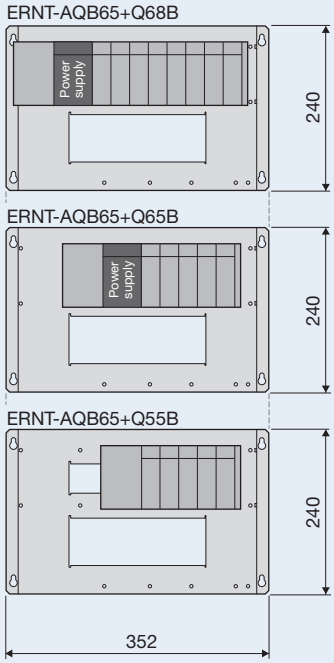

(6)ERNT-AQB62

Unit: mm

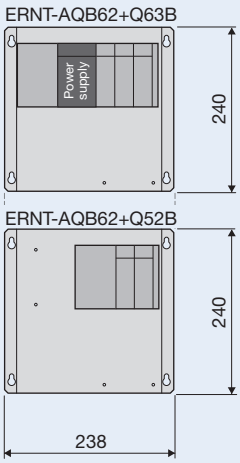

(7)ERNT-AQB58

Unit: mm

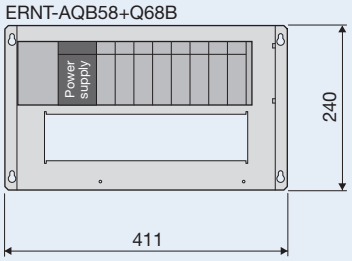

(8)ERNT-AQB55

Unit: mm

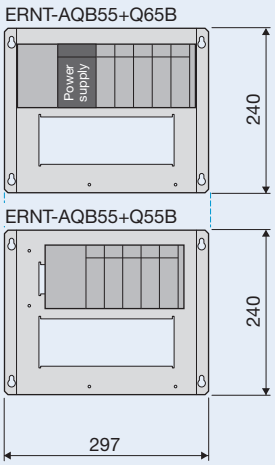

(9)ERNT-AQB52

Unit: mm

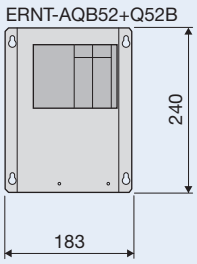

External Dimensions

Universal Conversion Adapter

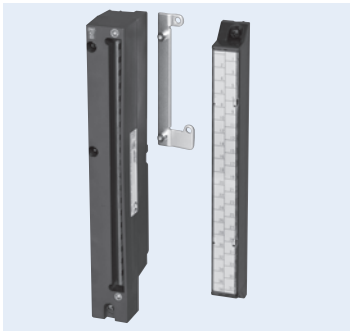

Model:
ERNT-AQTB20

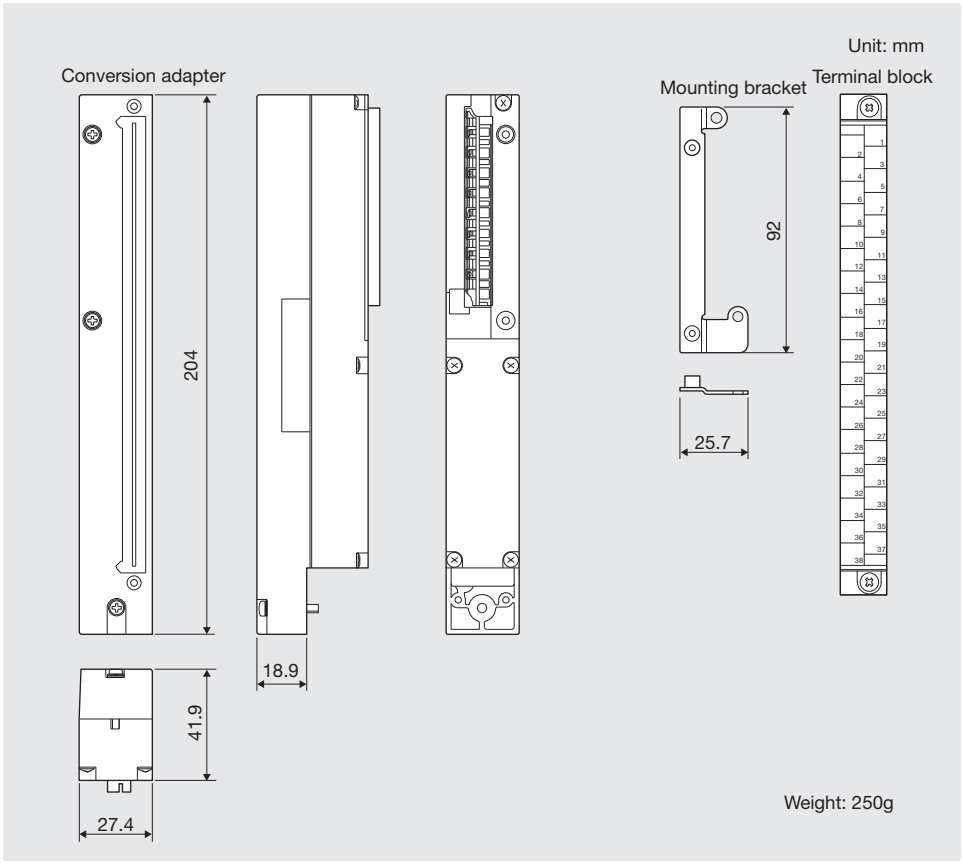

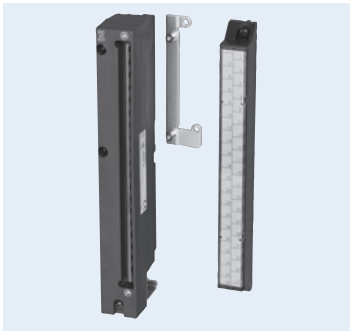

Model:
ERNT-AQTB20-S1

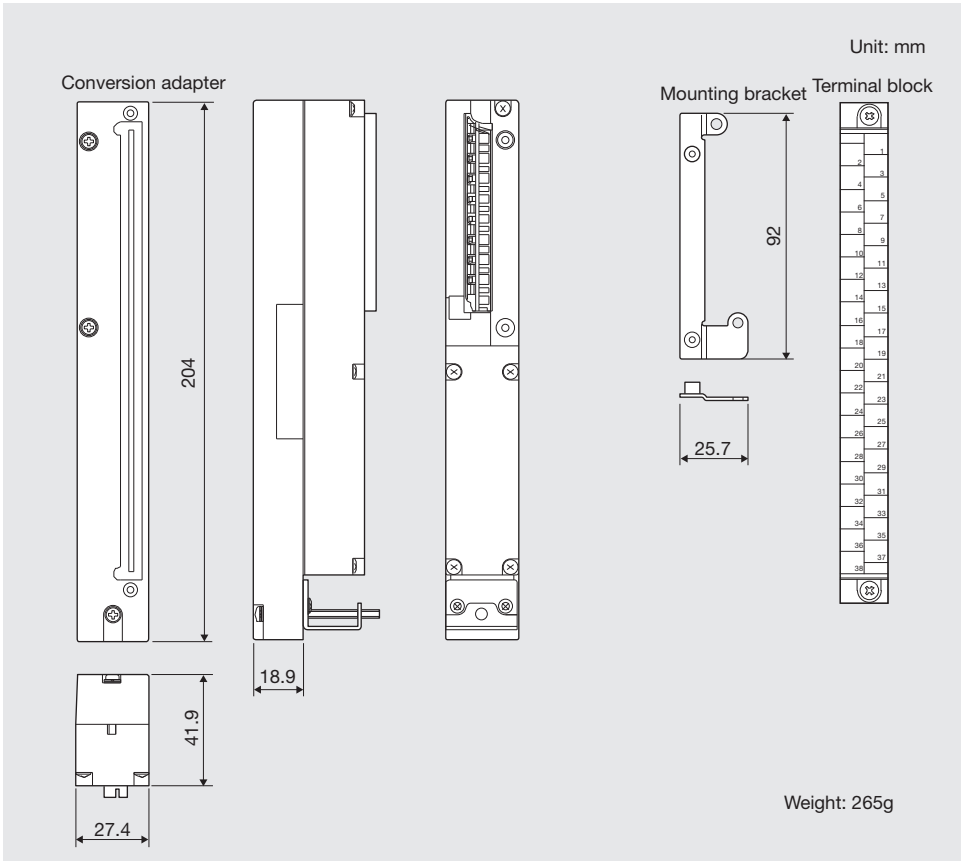

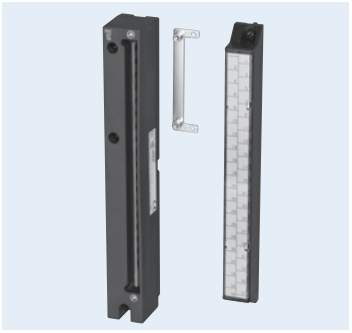

Model:
ERNT-AQTB38

Unit: mm

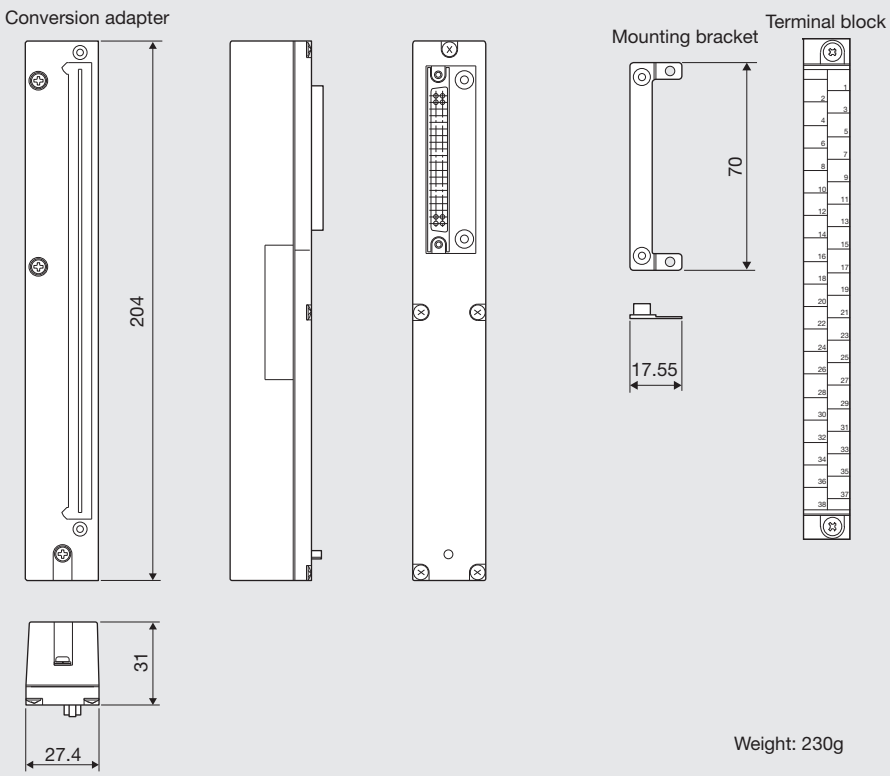

Weight: 230g

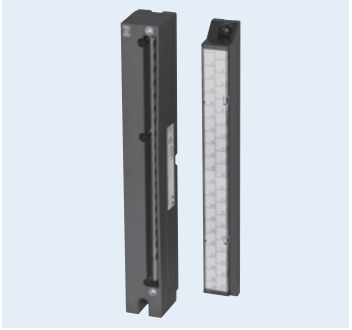

Model:
ERNT-AQTB38-E

Unit: mm

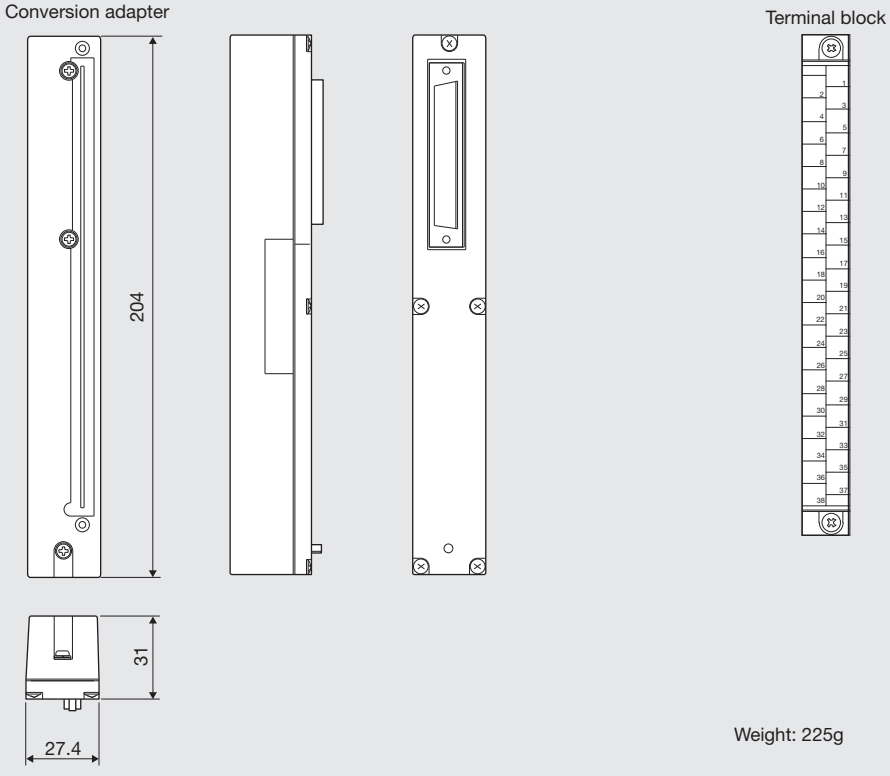

Weight: 225g

Base Adapter

The product used is the same as the upgrade tool for the MELSEC-A/MELSEC-Q series. See 1-37.

Conversion Adapter Support Flange

The product used is the same as the upgrade tool for the MELSEC-A/MELSEC-Q series. See 1-37.

Replacing a Non-Mitsubishi Programmable Controller (Small Type) with the MELSEC-Q Series

Model List

1 Universal Conversion Adapter (Small Type)

Verify that the MELSEC-Q series module electrical specifications satisfy the specifications of existing connected devices.

For input/output module

<1-slot type> (Attachable to the Mitsubishi Electric AnS-size Q series large type base units (Q□□BLS, Q□□BLS-D) as well.)

Input/Output	MELSEC-Q series module model before replacement	Conversion adapter			Page
		Model	Shape		
			Terminal block (accessory)	MELSEC-Q series	
Input	QX10	ERNT-ASQTB20	Terminal block (20 points)	Terminal block (18 points)	7-41 to 7-47
	QX28				
	QX40				
	QX40-S1				
	QX40H				
	QX50				
	QX70				
	QX70H				
	QX80				
	QX80H				
	QX90H				
Output module	QY10				
	QY18A				
	QY22				
	QY40P				
	QY50				
	QY68A				
	QY70				
	QY80				
Input/Output combination	QX48Y57				

Point The universal conversion adapter (small type) can be used in the system after replacing the MELSEC-AnS series with the MELSEC-Q series using the upgrade tool.

Universal Conversion Adapter

Specifications

20-point terminal block specifications

●Applicable solderless terminal

Unit: mm

Round non-insulated solderless terminal

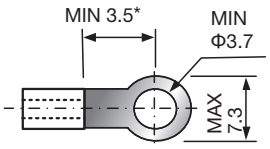

Round insulated solderless terminal

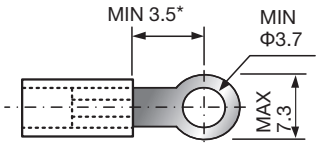

Y-shaped non-insulated solderless terminal

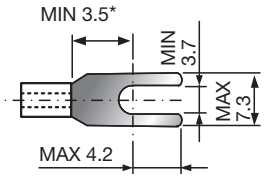

Y-shaped insulated solderless terminal

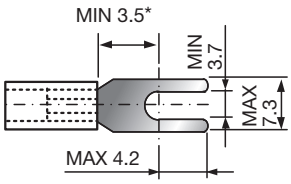

* The minimum length is 5.0 mm when the solderless terminal is attached up side down as shown on the right.

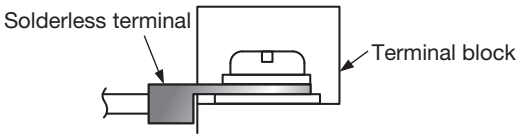

●Terminal block shape

Unit: mm

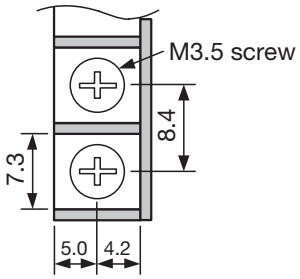

(1)ERNT-ASQTB20

Connection diagram

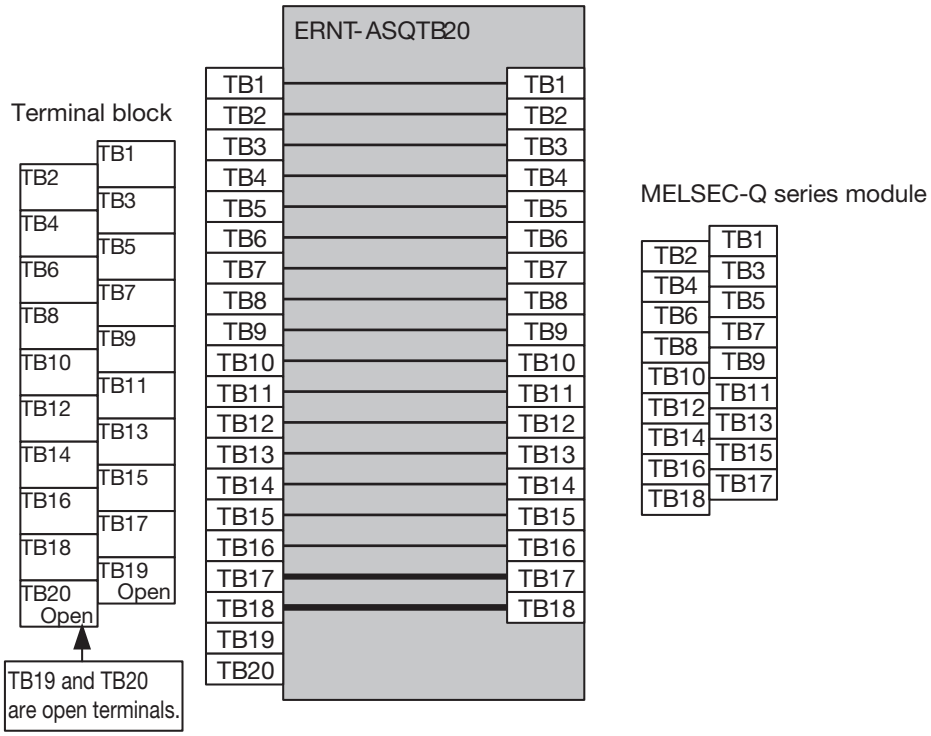

Input module

MELSEC-Q module to be used	External connection diagram	MELSEC-Q module specifications
QX10 + ERNT-ASQTB20	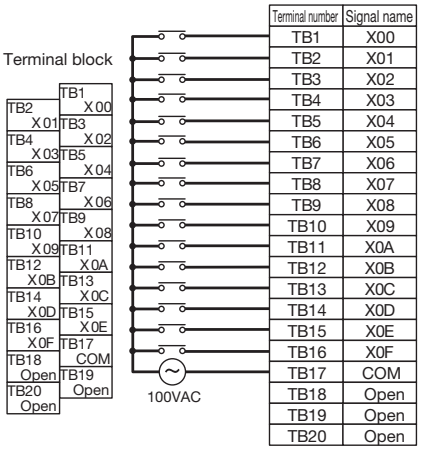	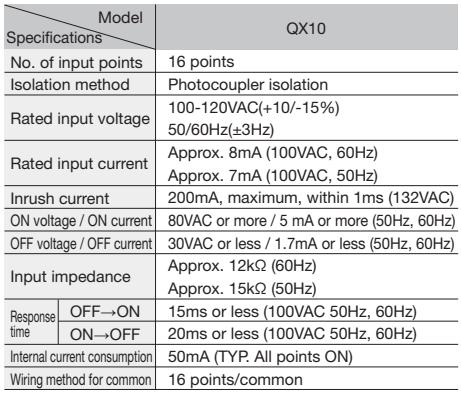
QX28 + ERNT-ASQTB20	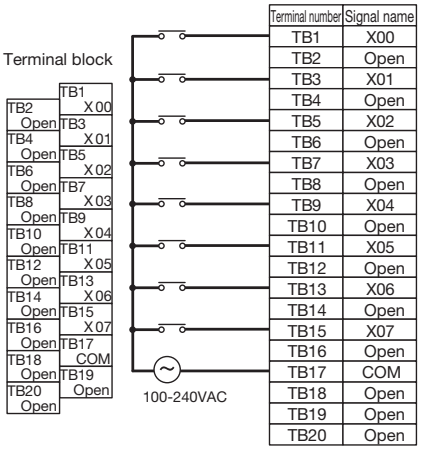	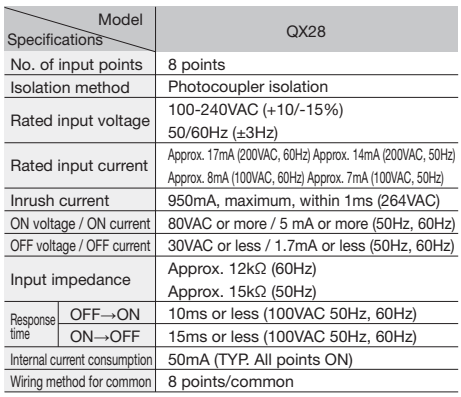

Specifications \ Model		QX10
No. of input points		16 points
Isolation method		Photocoupler isolation
Rated input voltage		100-120VAC(+10/-15%) 50/60Hz(±3Hz)
Rated input current		Approx. 8mA (100VAC, 60Hz) Approx. 7mA (100VAC, 50Hz)
Inrush current		200mA, maximum, within 1ms (132VAC)
ON voltage / ON current		80VAC or more / 5 mA or more (50Hz, 60Hz)
OFF voltage / OFF current		30VAC or less / 1.7mA or less (50Hz, 60Hz)
Input impedance		Approx. 12kΩ (60Hz) Approx. 15kΩ (50Hz)
Response time	OFF→ON	15ms or less (100VAC 50Hz, 60Hz)
	ON→OFF	20ms or less (100VAC 50Hz, 60Hz)
Internal current consumption		50mA (TYP. All points ON)
Wiring method for common		16 points/common

Specifications \ Model		QX28
No. of input points		8 points
Isolation method		Photocoupler isolation
Rated input voltage		100-240VAC (+10/-15%) 50/60Hz (±3Hz)
Rated input current		Approx. 17mA (200VAC, 60Hz) Approx. 14mA (200VAC, 50Hz) Approx. 8mA (100VAC, 60Hz) Approx. 7mA (100VAC, 50Hz)
Inrush current		950mA, maximum, within 1ms (264VAC)
ON voltage / ON current		80VAC or more / 5 mA or more (50Hz, 60Hz)
OFF voltage / OFF current		30VAC or less / 1.7mA or less (50Hz, 60Hz)
Input impedance		Approx. 12kΩ (60Hz) Approx. 15kΩ (50Hz)
Response time	OFF→ON	10ms or less (100VAC 50Hz, 60Hz)
	ON→OFF	15ms or less (100VAC 50Hz, 60Hz)
Internal current consumption		50mA (TYP. All points ON)
Wiring method for common		8 points/common

MELSEC-Q module to be used	External connection diagram	MELSEC-Q module specifications

QX40 / QX40-S1 + ERNT-ASQTB20

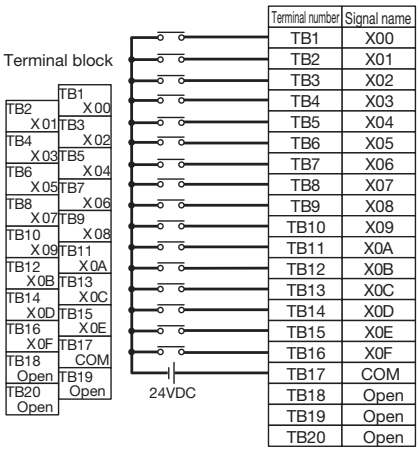

Terminal number	Signal name
TB1	X00
TB2	X01
TB3	X02
TB4	X03
TB5	X04
TB6	X05
TB7	X06
TB8	X07
TB9	X08
TB10	X09
TB11	X0A
TB12	X0B
TB13	X0C
TB14	X0D
TB15	X0E
TB16	X0F
TB17	COM
TB18	Open
TB19	Open
TB20	Open

Specifications \ Model		QX40 (positive common)	QX40-S1 (positive common)
No. of input points		16 points	16 points
Isolation method		Photocoupler isolation	Photocoupler isolation
Rated input voltage		24VDC(+20/-15%)	24VDC(+20/-15%)
Rated input current		Approx. 4mA	Approx. 6mA
ON voltage / ON current		19V or more / 3mA or more	19V or more / 4.0mA or more
OFF voltage / OFF current		11V or less / 1.7mA or less	11V or less / 1.7mA or less
Input resistance		Approx. 5.6kΩ	Approx. 3.9kΩ
Response time	OFF→ON	1/5/10/20/70ms or less	0.1/0.2/0.4/0.6/1ms or less
	ON→OFF	1/5/10/20/70ms or less	0.1/0.2/0.4/0.6/1ms or less
Internal current consumption		50mA (TYP. All points ON)	60mA (TYP. All points ON)
Wiring method for common		16 points/common	16 points/common

QX40H + ERNT-ASQTB20

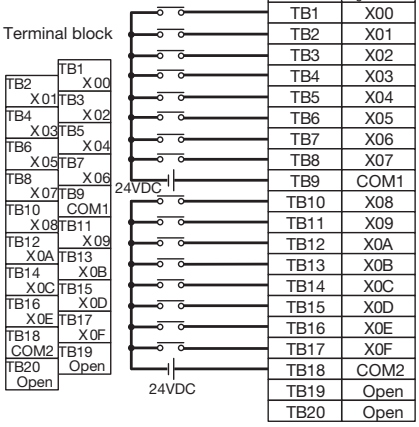

Terminal number	Signal name
TB1	X00
TB2	X01
TB3	X02
TB4	X03
TB5	X04
TB6	X05
TB7	X06
TB8	X07
TB9	COM1
TB10	X08
TB11	X09
TB12	X0A
TB13	X0B
TB14	X0C
TB15	X0D
TB16	X0E
TB17	X0F
TB18	COM2
TB19	Open
TB20	Open

Specifications \ Model		QX40H (positive common)
No. of input points		16 points
Isolation method		Photocoupler isolation
Rated input voltage		24VDC(+20/-15%)
Rated input current		Approx. 6mA
ON voltage / ON current		13V or more / 3mA or more
OFF voltage / OFF current		8V or less / 1.6mA or less
Input resistance		Approx. 3.9kΩ
Response time	OFF→ON	0.1/0.2/0.4/0.6/1ms or less
	ON→OFF	0.1/0.2/0.4/0.6/1ms or less
Internal current consumption		80mA (TYP. All points ON)
Wiring method for common		8 points/common

QX50 + ERNT-ASQTB20

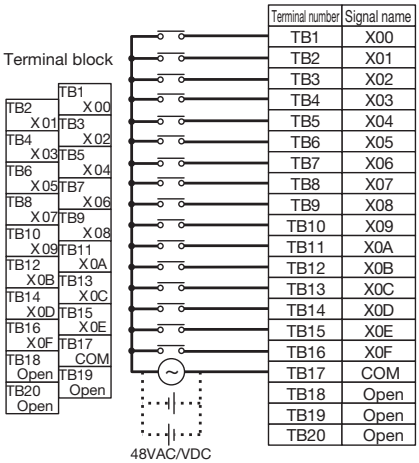

Terminal number	Signal name
TB1	X00
TB2	X01
TB3	X02
TB4	X03
TB5	X04
TB6	X05
TB7	X06
TB8	X07
TB9	X08
TB10	X09
TB11	X0A
TB12	X0B
TB13	X0C
TB14	X0D
TB15	X0E
TB16	X0F
TB17	COM
TB18	Open
TB19	Open
TB20	Open

Specifications \ Model		QX50 (Positive common / Negative common shared, AC)	
No. of input points		16 points	
Isolation method		Photocoupler isolation	
Rated input voltage		48VDC(+20/-15%)	48VAC(+10/-15%) 50/60Hz(±3Hz)
Rated input current		Approx. 4mA	
ON voltage / ON current		28V or more / 2.5mA or more	
OFF voltage / OFF current		10V or less / 1.0mA or less	
Input resistance		Approx. 11.2kΩ	
Response time	OFF→ON	5ms or less	15ms or less
	ON→OFF	20ms or less	20ms or less
Internal current consumption		50mA (TYP. All points ON)	
Wiring method for common		16 points/common	

QX70 + ERNT-ASQTB20

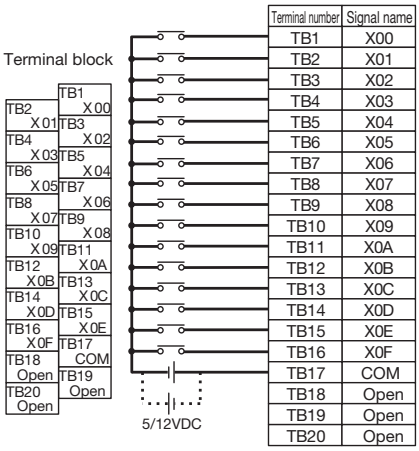

Terminal number	Signal name
TB1	X00
TB2	X01
TB3	X02
TB4	X03
TB5	X04
TB6	X05
TB7	X06
TB8	X07
TB9	X08
TB10	X09
TB11	X0A
TB12	X0B
TB13	X0C
TB14	X0D
TB15	X0E
TB16	X0F
TB17	COM
TB18	Open
TB19	Open
TB20	Open

Specifications \ Model		QX70 (Positive common / Negative common shared)	
No. of input points		16 points	
Isolation method		Photocoupler isolation	
Rated input voltage		5VDC(+20/-10%)	12VDC(+20/-15%)
Rated input current		Approx. 1.2mA	Approx. 3.3mA
ON voltage / ON current		3.5V or more / 1mA or more	
OFF voltage / OFF current		1V or less / 0.1mA or less	
Input resistance		Approx. 3.3kΩ	
Response time	OFF→ON	1/5/10/20/70ms or less	
	ON→OFF	1/5/10/20/70ms or less	
Internal current consumption		55mA (TYP. All points ON)	
Wiring method for common		16 points/common	

MELSEC-Q module to be used	External connection diagram	MELSEC-Q module specifications

QX70H + ERNT-ASQTB20

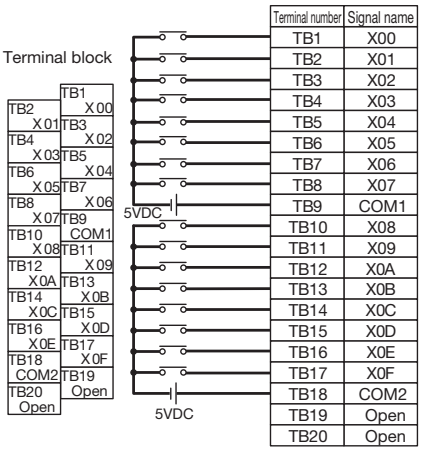

Terminal number	Signal name
TB1	X00
TB2	X01
TB3	X02
TB4	X03
TB5	X04
TB6	X05
TB7	X06
TB8	X07
TB9	COM1
TB10	X08
TB11	X09
TB12	X0A
TB13	X0B
TB14	X0C
TB15	X0D
TB16	X0E
TB17	X0F
TB18	COM2
TB19	Open
TB20	Open

Specifications \ Model		QX70H (positive common)
No. of input points		16 points
Isolation method		Photocoupler isolation
Rated input voltage		5VDC(+20/-15%)
Rated input current		Approx. 6mA
ON voltage / ON current		3.5V or more / 3mA or more
OFF voltage / OFF current		1V or less / 1mA or less
Input resistance		Approx. 470Ω
Response time	OFF→ON	0.1/0.2/0.4/0.6/1ms or less
	ON→OFF	0.1/0.2/0.4/0.6/1ms or less
Internal current consumption		80mA (TYP. All points ON)
Wiring method for common		8 points/common

QX80 + ERNT-ASQTB20

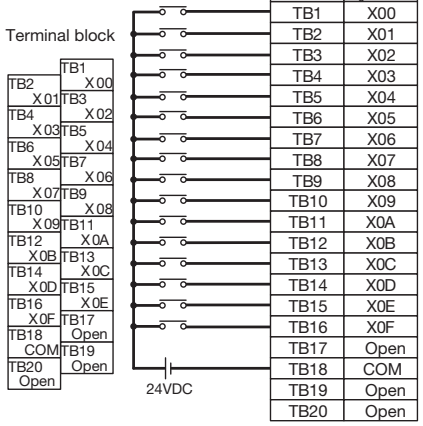

Terminal number	Signal name
TB1	X00
TB2	X01
TB3	X02
TB4	X03
TB5	X04
TB6	X05
TB7	X06
TB8	X07
TB9	X08
TB10	X09
TB11	X0A
TB12	X0B
TB13	X0C
TB14	X0D
TB15	X0E
TB16	X0F
TB17	Open
TB18	COM
TB19	Open
TB20	Open

Specifications \ Model		QX80 (negative common)
No. of input points		16 points
Isolation method		Photocoupler isolation
Rated input voltage		24VDC(+20/-15%)
Rated input current		Approx. 4mA
ON voltage / ON current		19V or more / 3mA or more
OFF voltage / OFF current		11V or less / 1.7mA or less
Input resistance		Approx. 5.6kΩ
Response time	OFF→ON	1/5/10/20/70ms or less
	ON→OFF	1/5/10/20/70ms or less
Internal current consumption		50mA (TYP. All points ON)
Wiring method for common		16 points/common

QX80H + ERNT-ASQTB20

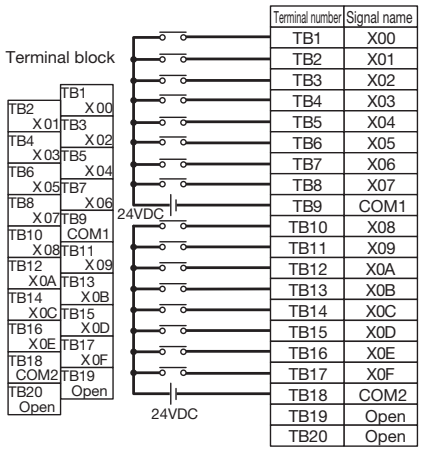

Terminal number	Signal name
TB1	X00
TB2	X01
TB3	X02
TB4	X03
TB5	X04
TB6	X05
TB7	X06
TB8	X07
TB9	COM1
TB10	X08
TB11	X09
TB12	X0A
TB13	X0B
TB14	X0C
TB15	X0D
TB16	X0E
TB17	X0F
TB18	COM2
TB19	Open
TB20	Open

Specifications \ Model		QX80H (negative common)
No. of input points		16 points
Isolation method		Photocoupler isolation
Rated input voltage		24VDC(+20/-15%)
Rated input current		Approx. 6mA
ON voltage / ON current		13V or more / 3mA or more
OFF voltage / OFF current		8V or less / 1.6mA or less
Input resistance		Approx. 3.9kΩ
Response time	OFF→ON	0.1/0.2/0.4/0.6/1ms or less
	ON→OFF	0.1/0.2/0.4/0.6/1ms or less
Internal current consumption		80mA (TYP. All points ON)
Wiring method for common		8 points/common

QX90H + ERNT-ASQTB20

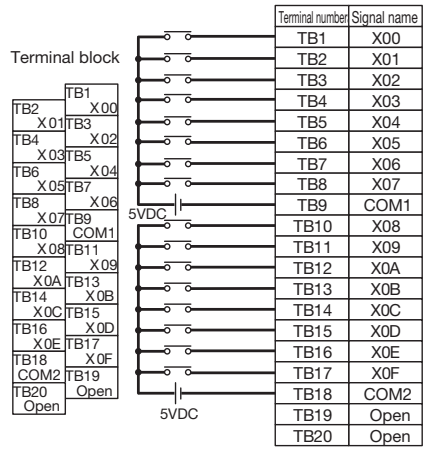

Terminal number	Signal name
TB1	X00
TB2	X01
TB3	X02
TB4	X03
TB5	X04
TB6	X05
TB7	X06
TB8	X07
TB9	COM1
TB10	X08
TB11	X09
TB12	X0A
TB13	X0B
TB14	X0C
TB15	X0D
TB16	X0E
TB17	X0F
TB18	COM2
TB19	Open
TB20	Open

Specifications \ Model		QX90H (negative common)
No. of input points		16 points
Isolation method		Photocoupler isolation
Rated input voltage		5VDC(+20/-15%)
Rated input current		Approx. 6mA
ON voltage / ON current		3.5V or more / 3mA or more
OFF voltage / OFF current		1V or less / 1mA or less
Input resistance		Approx. 470Ω
Response time	OFF→ON	0.1/0.2/0.4/0.6/1ms or less
	ON→OFF	0.1/0.2/0.4/0.6/1ms or less
Internal current consumption		80mA (TYP. All points ON)
Wiring method for common		8 points/common

Output module

QY10 + ERNT-ASQTB20

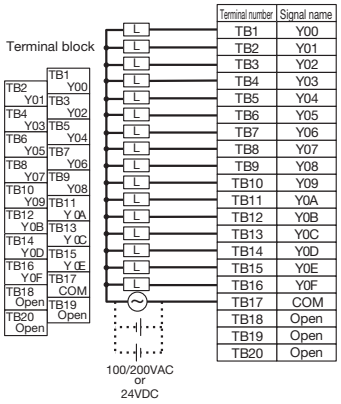

Terminal number	Signal name
TB1	Y00
TB2	Y01
TB3	Y02
TB4	Y03
TB5	Y04
TB6	Y05
TB7	Y06
TB8	Y07
TB9	Y08
TB10	Y09
TB11	Y0A
TB12	Y0B
TB13	Y0C
TB14	Y0D
TB15	Y0E
TB16	Y0F
TB17	COM
TB18	Open
TB19	Open
TB20	Open

Specifications \ Model		QY10
No. of output points		16 points
Isolation method		Relay isolation
Rated switching voltage/current		24VDC/2A (resistance load) / point 240VAC/2A (cosΦ =1) / point 8A/common
Minimum switching load		5VDC 1mA
Maximum switching voltage		264VAC 125VDC
Response time	OFF→ON	10ms or less
	ON→OFF	12ms or less
Surge suppressor		No
Fuse		No
Internal current consumption		430mA (TYP. All points ON)
Wiring method for common		16 points/common

QY18A + ERNT-ASQTB20

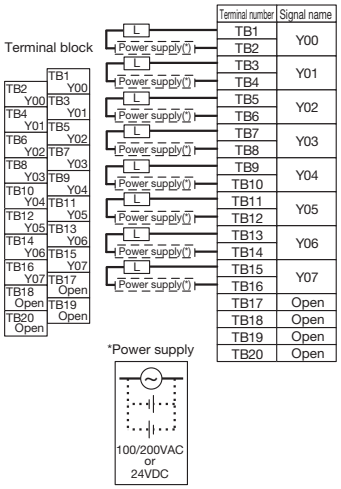

Terminal number	Signal name
TB1	Y00
TB2	
TB3	Y01
TB4	
TB5	Y02
TB6	
TB7	Y03
TB8	
TB9	Y04
TB10	
TB11	Y05
TB12	
TB13	Y06
TB14	
TB15	Y07
TB16	
TB17	Open
TB18	Open
TB19	Open
TB20	Open

Specifications \ Model		QY18A
No. of output points		8 points
Isolation method		Relay isolation
Rated switching voltage/current		24VDC/2A (resistance load) / point 240VAC/2A (cosΦ =1) / point 8A/module
Minimum switching load		5VDC 1mA
Maximum switching voltage		264VAC 125VDC
Response time	OFF→ON	10ms or less
	ON→OFF	12ms or less
Surge suppressor		No
Fuse		No
Internal current consumption		240mA (TYP. All points ON)
Wiring method for common		All points independent

QY22 + ERNT-ASQTB20

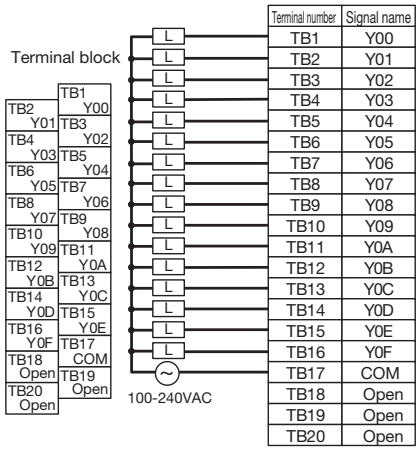

Terminal number	Signal name
TB1	Y00
TB2	Y01
TB3	Y02
TB4	Y03
TB5	Y04
TB6	Y05
TB7	Y06
TB8	Y07
TB9	Y08
TB10	Y09
TB11	Y0A
TB12	Y0B
TB13	Y0C
TB14	Y0D
TB15	Y0E
TB16	Y0F
TB17	COM
TB18	Open
TB19	Open
TB20	Open

Specifications \ Model		QY22
No. of output points		16 points
Isolation method		Photocoupler isolation
Rated load voltage		100-240VAC 50/60Hz±5%
Maximum load current		0.6A/point, 4.8/common
Maximum inrush current		20A, one cycle or less
Leakage current at OFF		3mA or less(240V 60Hz) 1.5mA or less(120V 60Hz)
Maximum voltage drop at ON		1.5V or less
Response time	OFF→ON	1ms + 0.5 cycles or less
	ON→OFF	1ms + 0.5 cycles or less (rated load, resistance load)
Surge suppressor		CR absorber
Fuse		No
Internal current consumption		250mA (MAX.All points ON)
Wiring method for common		16 points/common

QY40P QY50 + ERNT-ASQTB20

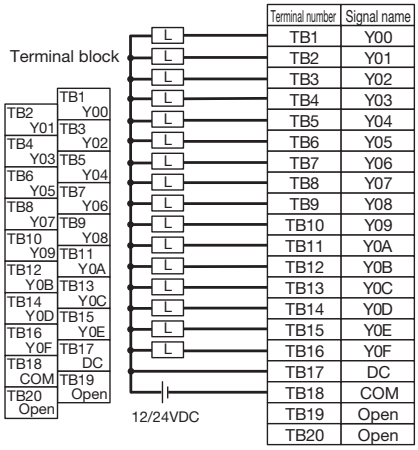

Terminal number	Signal name
TB1	Y00
TB2	Y01
TB3	Y02
TB4	Y03
TB5	Y04
TB6	Y05
TB7	Y06
TB8	Y07
TB9	Y08
TB10	Y09
TB11	Y0A
TB12	Y0B
TB13	Y0C
TB14	Y0D
TB15	Y0E
TB16	Y0F
TB17	DC
TB18	COM
TB19	Open
TB20	Open

Specifications \ Model		QY40P (Sink type)	QY50 (Sink type)
No. of output points		16 point	16 point
Isolation method		Photocoupler isolation	Photocoupler isolation
Rated load voltage		12-24VDC(+20/-15%)	12-24VDC(+20/-15%)
Maximum load current		0.1A/point,1.6/common	0.5A/point,4/common
Maximum inrush current		0.7A 10ms or less	4A 10ms or less
Leakage current at OFF		0.1mA or less	0.1mA or less
Maximum voltage drop at ON		0.1VDC(TYP.)0.1A 0.2VDC(MAX.)0.1A	0.2VDC(TYP.)0.5A 0.3VDC(MAX.)0.5A
Response time	OFF→ON	1ms or less	1ms or less
	ON→OFF	1ms or less (rated load, resistance load)	1ms or less (rated load, resistance load)
Surge suppressor		Zener diode	Zener diode
Fuse		No	6.7A (not replaceable) (fuse breaking capacity: 50A)
Protection function		Yes (overload protection and overheat protection)	No
Internal current consumption		65mA (TYP. All points ON)	80mA (TYP. All points ON)
Wiring method for common		16 points/common	16 points/common

MELSEC-Q module to be used	External connection diagram	MELSEC-Q module specifications

QY68A + ERNT-ASQTB20

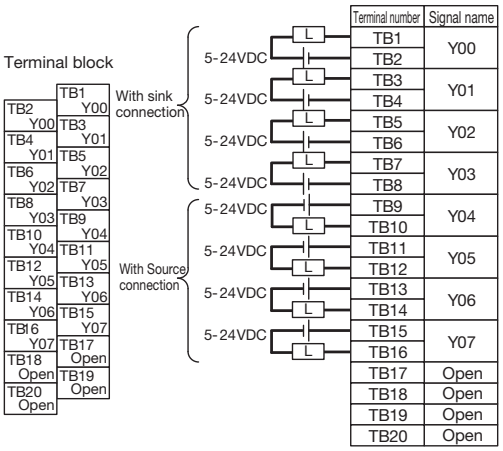

Terminal number	Signal name
TB1	Y00
TB2	
TB3	Y01
TB4	
TB5	Y02
TB6	
TB7	Y03
TB8	
TB9	Y04
TB10	
TB11	Y05
TB12	
TB13	Y06
TB14	
TB15	Y07
TB16	
TB17	Open
TB18	Open
TB19	Open
TB20	Open

Specifications \ Model	QY68A (Sink/Source type)
No. of output points	8 points
Isolation method	Photocoupler isolation
Rated load voltage	5-24VDC (+20/–10%)
Maximum load current	2A/point, 8A/module
Maximum inrush current	8A 10ms or less
Leakage current at OFF	0.1mA or less
Maximum voltage drop at ON	0.3VDC(MAX.)2A
Response time OFF→ON	3ms or less
Response time ON→OFF	10ms or less (resistance load)
Surge suppressor	Zener diode
Fuse	No
Protection function	No
Internal current consumption	110mA (TYP. All points ON)
Wiring method for common	All points independent

QY70 + ERNT-ASQTB20

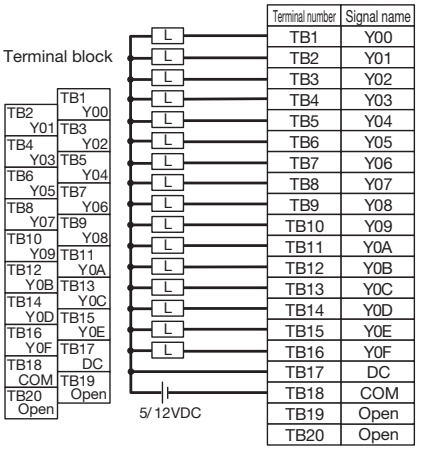

Terminal number	Signal name
TB1	Y00
TB2	Y01
TB3	Y02
TB4	Y03
TB5	Y04
TB6	Y05
TB7	Y06
TB8	Y07
TB9	Y08
TB10	Y09
TB11	Y0A
TB12	Y0B
TB13	Y0C
TB14	Y0D
TB15	Y0E
TB16	Y0F
TB17	DC
TB18	COM
TB19	Open
TB20	Open

Specifications \ Model	QY70 (Sink type)
No. of output points	16 points
Isolation method	Photocoupler isolation
Rated load voltage	5-12VDC (+25/–10%)
Maximum load current	16mA/point, 256mA/common
Maximum inrush current	40mA 10ms or less
Leakage current at OFF	VOH:3.5VDC (Vcc=5VDC,IOH=0.4mA)
Maximum voltage drop at ON	VOL:0.3VDC
Response time OFF→ON	0.5ms or less
Response time ON→OFF	0.5ms or less (resistance load)
Surge suppressor	No
Fuse	1.6A (not replaceable) (fuse breaking capacity: 50A)
Protection function	No
Internal current consumption	95mA (TYP. All points ON)
Wiring method for common	16 points/common

QY80 + ERNT-ASQTB20

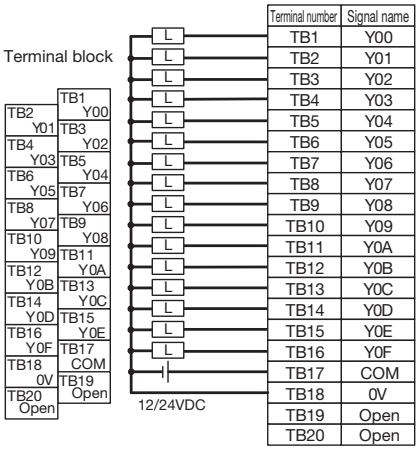

Terminal number	Signal name
TB1	Y00
TB2	Y01
TB3	Y02
TB4	Y03
TB5	Y04
TB6	Y05
TB7	Y06
TB8	Y07
TB9	Y08
TB10	Y09
TB11	Y0A
TB12	Y0B
TB13	Y0C
TB14	Y0D
TB15	Y0E
TB16	Y0F
TB17	COM
TB18	0V
TB19	Open
TB20	Open

Specifications \ Model	QY80 (Source type)
No. of output points	16 points
Isolation method	Photocoupler isolation
Rated load voltage	12-24VDC (+20/–15%)
Maximum load current	0.5A/point, 4A/common
Maximum inrush current	4A 10ms or less
Leakage current at OFF	0.1mA or less
Maximum voltage drop at ON	0.2VDC(TYP.)0.5A 0.3VDC(MAX.)0.5A
Response time OFF→ON	1ms or less
Response time ON→OFF	1ms or less (rated load, resistance load)
Surge suppressor	Zener diode
Fuse	6.7A (not replaceable) (fuse breaking capacity: 50A)
Protection function	No
Internal current consumption	80mA (TYP. All points ON)
Wiring method for common	16 points/common

I/O combined module

MELSEC-Q module to be used	External connection diagram	MELSEC-Q module specifications

QX48Y57 + ERNT-ASQTB20

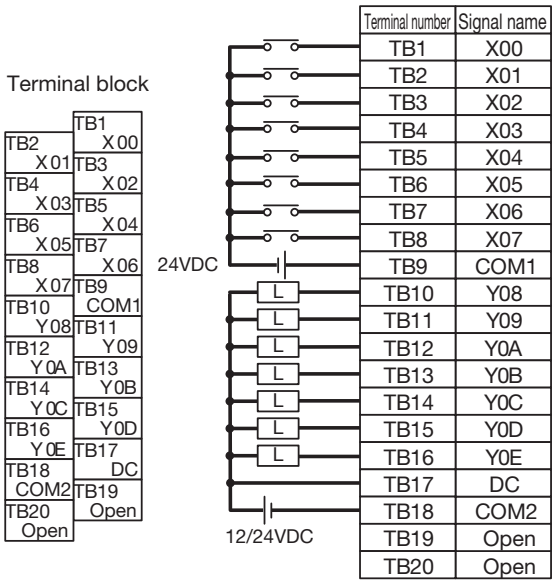

<Input specifications>

Specifications \ Model	QX48Y57 (positive common)
No. of input points	8 points
Isolation method	Photocoupler isolation
Rated input voltage	24VDC(+20/-15%)
Rated input current	Approx. 4mA
ON voltage / ON current	19V or more / 3mA or more
OFF voltage / OFF current	11V or less / 1.7mA or less
Input resistance	Approx. 5.6kΩ
Response time OFF→ON	1/5/10/20/70ms or less
Response time ON→OFF	1/5/10/20/70ms or less
Internal current consumption	80mA (TYP. All points ON)
Wiring method for common	8 points/common

<Output specifications>

Specifications \ Model	QX48Y57 (Sink type)
No. of output points	7 points
Isolation method	Photocoupler isolation
Rated load voltage	12-24VDC (+20/-15%)
Maximum load current	0.5A/point, 2A/common
Maximum inrush current	4A 10ms or less
Leakage current at OFF	0.1mA or less
Maximum voltage drop at ON	0.2VDC(TYP.)0.5A 0.3VDC(MAX.)0.5A
Response time OFF→ON	1ms or less
Response time ON→OFF	1ms or less (rated load, resistance load)
Surge suppressor	Zener diode
Fuse	4A (not replaceable (fuse breaking capacity: 50A)
Protection function	No
Wiring method for common	7 points/common

Usage Precautions

Verify that the MELSEC-Q series module specifications satisfy the specifications of the existing connected devices. Refer to the user's manual of the applicable MELSEC-Q series module.

Module Width

(1) The module width is 27.4mm. Check the conditions for securing an enough wiring space for installation.

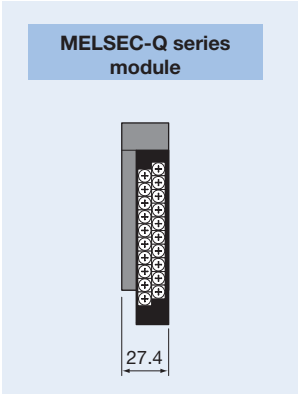

(2) If the wiring interferes with a mounted module, lift the wiring forward, etc., so that there is no interference.

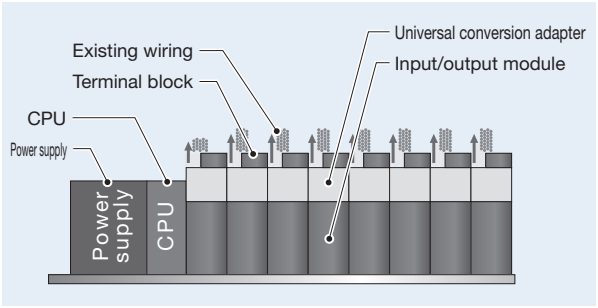

(3) If interference still occurs even when you lift the wiring, open up a slot to secure a space for wiring.

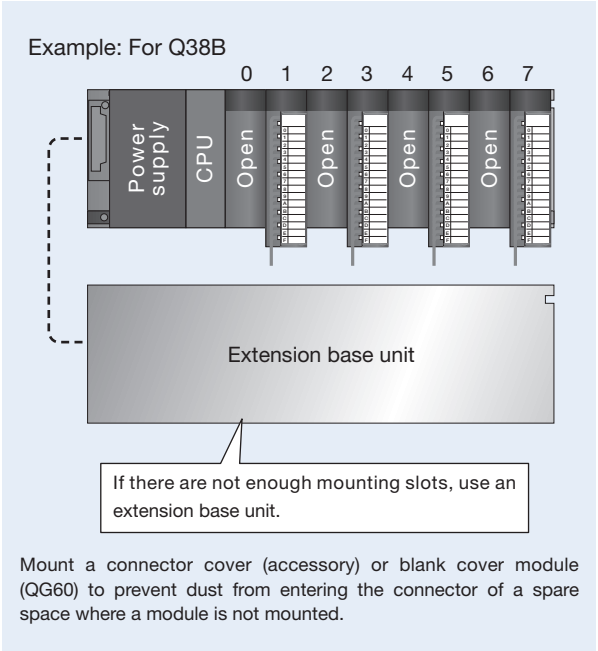

Mount a connector cover (accessory) or blank cover module (QG60) to prevent dust from entering the connector of a spare space where a module is not mounted.

(4) If replacement is not possible based on 2) or 3) on the left, consider using the Mitsubishi Electric AnS-size Q series large type base unit. 7-7

Depth / Height

MELSEC-Q module	Other than QY22	QY22
Depth	128.5mm	150.5mm
Height	117.5mm	117.5mm
Mounting diagram	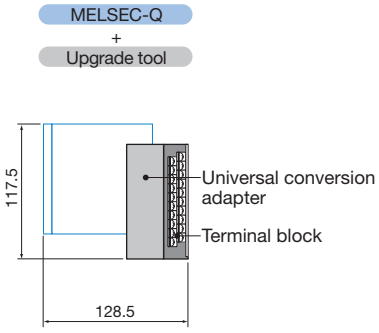	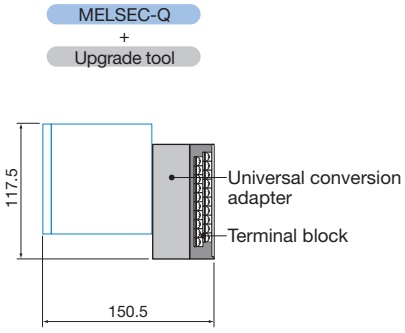

External Dimensions

Universal Conversion Adapter

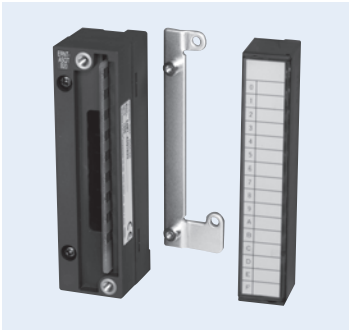

Model:
ERNT-ASQTB20

Unit: mm

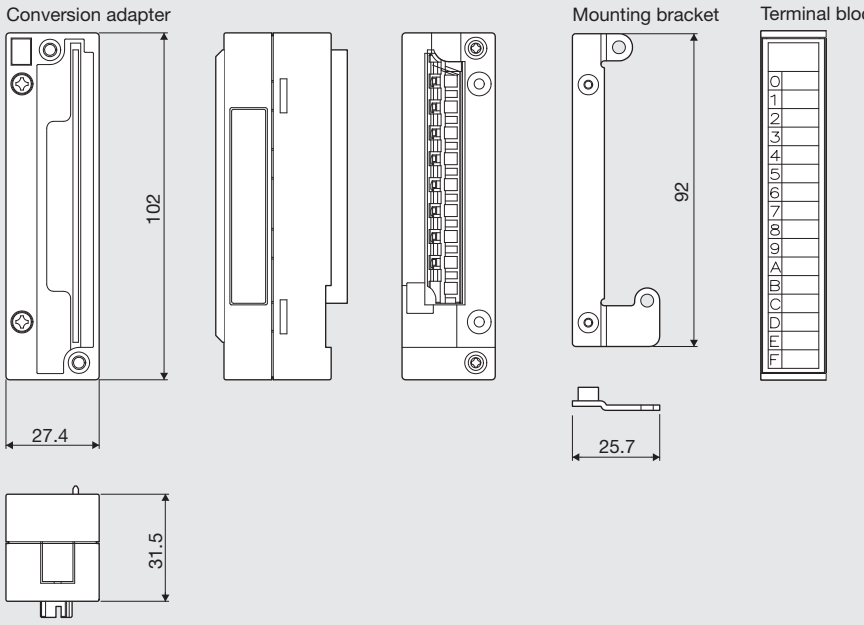

Weight: 140g

List of Applicable Standards

MELSEC-A Series ⇨ MELSEC-Q Series Upgrade Tool

√ : Compliant × : Not compliant - : Out of scope

Product name		Model	Standard		
			UL	cUL	CE(LVD)
Input/Output module conversion adapter	1-slot type	**ERNT-AQTX10**	√	√	√
		ERNT-AQTX40	√	√	√
		ERNT-AQTX80	√	√	√
		ERNT-AQTX41	√	√	√
		ERNT-AQTX81	√	√	√
		ERNT-AQTY10	√	√	√
		ERNT-AQTY22	√	√	√
		ERNT-AQTY40	√	√	√
		ERNT-AQTY50	√	√	√
		ERNT-AQTY80	√	√	√
		ERNT-AQTY41	√	√	√
		ERNT-AQTY81	√	√	√
	2-slot type	**ERNT-AQTX11**	√	√	√
		ERNT-AQTY10A	√	√	√
		ERNT-AQTY13	√	√	√
		ERNT-AQTY23	√	√	√
		ERNT-AQTY51	√	√	√
Analog/High-speed counter module conversion adapter	1-slot type	**ERNT-AQT68AD**	√	√	√
		ERNT-AQT68ADN	√	√	√
		ERNT-AQT62DA	√	√	√
		ERNT-AQT68DA	√	√	√
		ERNT-AQTD61	√	√	√
	2-slot type	**ERNT-AQT68AD-GH**	√	√	√
		ERNT-AQT616AD	√	√	√
		ERNT-AQT616DA	√	√	√
Conversion adapter support flange		**ERNT-AQF12**	–	–	–
		ERNT-AQF8	–	–	–
		ERNT-AQF5	–	–	–
		ERNT-AQF3	–	–	–
Base adapter		**ERNT-AQB38**	–	–	–
		ERNT-AQB68	–	–	–
		ERNT-AQB58	–	–	–
		ERNT-AQB35	–	–	–
		ERNT-AQB65	–	–	–
		ERNT-AQB55	–	–	–
		ERNT-AQB32	–	–	–
		ERNT-AQB62	–	–	–
		ERNT-AQB52	–	–	–

MELSEC-AnS Series ⇨ MELSEC-L Series Upgrade Tool

√ : Compliant × : Not compliant - : Out of scope

Product name		Model	Standard		
			UL	cUL	CE(LVD)
Input/Output module conversion adapter	1-module type	**ERNT-ASLTXY10**	√	√	√
		ERNT-ASLTX40	√	√	√
		ERNT-ASLTX80	√	√	√
		ERNT-ASLTY22	√	√	√
		ERNT-ASLTY40	√	√	√
		ERNT-ASLTY50	√	√	√
		ERNT-ASLTY80	√	√	√
		ERNT-ASLCXY81	√	√	√
Analog module conversion adapter	1-module type	**ERNT-ASLT64AD**	√	√	√
		ERNT-ASLT62DA	√	√	√
High-speed counter module conversion adapter	1-module type	**ERNT-ASLTD61**	√	√	√
		ERNT-ASLTD62	√	√	√
Base adapter		**ERNT-ASLB38**	–	–	–
		ERNT-ASLB35	–	–	–
		ERNT-ASLB33	–	–	–
		ERNT-ASLB32	–	–	–
		ERNT-ASLBJ	–	–	–
		ERNT-ASLB68	–	–	–
		ERNT-ASLB65	–	–	–
		ERNT-ASLB58	–	–	–
		ERNT-ASLB55	–	–	–
		ERNT-ASLB52	–	–	–

MELSEC-AnS Series ⇨ MELSEC-Q Series Upgrade Tool

√ : Compliant × : Not compliant - : Out of scope

Product name		Model	Standard		
			UL	cUL	CE(LVD)
Input/Output module conversion adapter	1-slot type	**ERNT-ASQTXY10**	√	√	√
		ERNT-ASQTX40	√	√	√
		ERNT-ASQTX80	√	√	√
		ERNT-ASQTY22	√	√	√
		ERNT-ASQTY40	√	√	√
		ERNT-ASQTY50	√	√	√
		ERNT-ASQTY80	√	√	√
	2-slot type	**ERNT-ASQTX20**	√	√	√
		ERNT-ASQTY60	√	√	√
		ERNT-ASQTY60E	√	√	√
Analog/High-speed counter/ Temperature input module conversion adapter	1-slot type	**ERNT-ASQT64AD**	√	√	√
		ERNT-ASQT68AD	√	√	√
		ERNT-ASQT62DA	√	√	√
		ERNT-ASQT68DA	√	√	√
		ERNT-ASQT68AD-G	√	√	√
		ERNT-ASQT63ADA	√	√	√
		ERNT-ASQTD61	√	√	√
		ERNT-ASQTD62	√	√	√
		ERNT-ASQTD62D	√	√	√
		ERNT-ASQT68TD-H01	√	√	√
		ERNT-ASQT68TD-H02	√	√	√
		ERNT-ASQT62RD	√	√	√
		ERNT-ASQT64TCTT	√	√	√
		ERNT-ASQT64TCRT	√	√	√
		ERNT-ASQT62TCTT	√	√	√
		ERNT-ASQT62TCRT	√	√	√
	1-slot type + Conversion cable	**ERNT-ASQT64TCTTBW**	√	√	√ (*)
		ERNT-ASQT64TCRTBW	√	√	√ (*)
		ERNT-ASQT62TCTTBW	√	√	√ (*)
		ERNT-ASQT62TCRTBW	√	√	√ (*)
Base adapter		**ERNT-ASQB38N**	–	–	–
		ERNT-ASQB35N	–	–	–
		ERNT-ASQB33N	–	–	–
		ERNT-ASQB32N	–	–	–
		ERNT-ASQB68N	–	–	–
		ERNT-ASQB65N	–	–	–
		ERNT-ASQB58N	–	–	–
		ERNT-ASQB55N	–	–	–
		ERNT-ASQB52N	–	–	–
		ERNT-ASQB00JN	–	–	–
		ERNT-ASQB38N-S1	–	–	–
		ERNT-ASQB35N-S1	–	–	–
		ERNT-ASQB33N-S1	–	–	–
Conversion adapter DIN rail mounting bracket		**ERNT-ASQDIN3868**	–	–	–
		ERNT-ASQDIN356500J	–	–	–
		ERNT-ASQDIN3355	–	–	–
		ERNT-ASQDIN52	–	–	–

* Only the conversion adapter is CE (LVD) compatible. The disconnection detection connector conversion cable is not related to CE (LVD).

SYSMAC C Series ⇨ MELSEC-Q Series Upgrade Tool

√ : Compliant × : Not compliant - : Out of scope

Product name		Model	Standard		
			UL	cUL	CE(LVD)
Input/Output module conversion adapter	1-slot type	**ERNT-CQTX121**	√	√	√
		ERNT-CQTX112213	√	√	√
		ERNT-CQTX215218	√	√	√
		ERNT-CQCX218501	√	√	√
		ERNT-CQCX114219	√	√	√
		ERNT-CQTY221	√	√	√
		ERNT-CQTY226	√	√	√
		ERNT-CQTY219217	√	√	√
		ERNT-CQTY411	√	√	√
		ERNT-CQTY412	√	√	√
		ERNT-CQTY414218	√	√	√
		ERNT-CQCY415	√	√	√
		ERNT-CQCY501	√	√	√
		ERNT-CQCY213	√	√	√
	2-slot type	**ERNT-CQTX122**	√	√	√
		ERNT-CQTY224	√	√	√
		ERNT-CQTY225	√	√	√
		ERNT-CQTY218	√	√	√
Conversion adapter support flange		**ERNT-QF12**	–	–	–
		ERNT-QF8	–	–	–
		ERNT-QF5	–	–	–
Base adapter		**ERNT-CQB081**	–	–	–
		ERNT-CQB051	–	–	–
		ERNT-CQB031	–	–	–

JW Series ⇨ MELSEC-Q Series Upgrade Tool

√ : Compliant × : Not compliant - : Out of scope

Product name		Model	Standard		
			UL	cUL	CE(LVD)
Input/Output module conversion adapter	1-slot type	**ERNT-1JQ11N12N**	×	×	√
		ERNT-1JQ32N34N	×	×	√
		ERNT-1JQ64NC	×	×	√
		ERNT-1JQ13S	×	×	√
		ERNT-1JQ12S	×	×	√
		ERNT-1JQ32S	×	×	√
		ERNT-1JQ32SC62SC	×	×	√
		ERNT-2JQ210NS	×	×	√
		ERNT-2JQ212S	×	×	√
		ERNT-2JQ234N264N	×	×	√
		ERNT-2JQ232S262S	×	×	√
	2-slot type	**ERNT-1JQ31N34S**	×	×	√
		ERNT-1JQ33S	×	×	√

MEMOCON-SC GL Series (2000 Series I/O) ⇨ MELSEC-Q Series Upgrade Tool

√ : Compliant × : Not compliant - : Out of scope

Product name		Model	Standard		
			UL	cUL	CE(LVD)
Input/Output module conversion adapter	1-slot type	**ERNT-1Y2Q501**	×	×	√
		ERNT-1Y2Q601611	×	×	√
		ERNT-1JQ32N34N	×	×	√
		ERNT-1Y2Q615625	×	×	√
		ERNT-1Y2Q500	×	×	√
		ERNT-1Y2Q600	×	×	√
		ERNT-1Y2Q602606	×	×	√
		ERNT-CQCY213	√	√	√
	2-slot type	**ERNT-1Y2Q505**	×	×	√
		ERNT-1JQ33S	×	×	√

Non-Mitsubishi Programmable Controller ⇨ MELSEC-Q Series Upgrade Tool

√ : Compliant × : Not compliant - : Out of scope

Product name		Model	Standard		
			UL	cUL	CE(LVD)
Input/Output module universal conversion adapter	1-slot type	**ERNT-AQTB20**	×	×	√
		ERNT-AQTB20-S1	×	×	√
		ERNT-AQTB38	×	×	√
		ERNT-AQTB38-E	×	×	√
		ERNT-ASQTB20	×	×	√

■ Product Configuration

MELSEC-A Series ⇨ MELSEC-Q Series Upgrade Tool

Product name		Model	Product configuration
Input/Output module conversion adapter	1-slot type	**ERNT-AQTX10**	Conversion adapter (main body), mounting bracket, mounting bracket screws (2), user's manual
		ERNT-AQTX40	
		ERNT-AQTX80	
		ERNT-AQTX41	
		ERNT-AQTX81	Conversion adapter (main body), user's manual
		ERNT-AQTY10	Conversion adapter (main body), mounting bracket, mounting bracket screws (2), user's manual
		ERNT-AQTY22	
		ERNT-AQTY40	
		ERNT-AQTY50	
		ERNT-AQTY80	
		ERNT-AQTY41	
		ERNT-AQTY81	Conversion adapter (main body), user's manual
	2-slot type	**ERNT-AQTX11**	Conversion adapter (main body), mounting bracket, mounting bracket screws (4), user's manual
		ERNT-AQTY10A	
		ERNT-AQTY13	
		ERNT-AQTY23	
		ERNT-AQTY51	
Analog/High-speed counter module conversion adapter	1-slot type	**ERNT-AQT68AD**	Conversion adapter (main body), mounting bracket, mounting bracket screws (2), user's manual
		ERNT-AQT68ADN	
		ERNT-AQT62DA	
		ERNT-AQT68DA	
		ERNT-AQTD61	
	2-slot type	**ERNT-AQT68AD-GH**	Conversion adapter (main body), mounting bracket, mounting bracket screws (4), user's manual
		ERNT-AQT616AD	
		ERNT-AQT616DA	
Conversion adapter support flange		**ERNT-AQF12**	Conversion adapter, support flange (main body), mounting screws (2)
		ERNT-AQF8	
		ERNT-AQF5	
		ERNT-AQF3	
Base adapter		**ERNT-AQB38**	Base adapter (main body), MELSEC-Q series base unit mounting screws (4), user's manual
		ERNT-AQB68	
		ERNT-AQB58	
		ERNT-AQB35	
		ERNT-AQB65	
		ERNT-AQB55	
		ERNT-AQB32	
		ERNT-AQB62	
		ERNT-AQB52	

MELSEC-AnS Series ⇨ MELSEC-L Series Upgrade Tool

Product name		Model	Product configuration
Input/Output module conversion adapter	1-module type	**ERNT-ASLTXY10**	Conversion adapter (main body), mounting bracket, mounting bracket screws (1), terminal block cover, user's manual
		ERNT-ASLTX40	
		ERNT-ASLTX80	
		ERNT-ASLTY22	
		ERNT-ASLTY40	
		ERNT-ASLTY50	
		ERNT-ASLTY80	
		ERNT-ASLCXY81	Conversion adapter (main body), mounting bracket, mounting bracket screws (2), user's manual
Analog module conversion adapter	1-module type	**ERNT-ASLT64AD**	Conversion adapter (main body), mounting bracket, mounting bracket screws (1), terminal block cover, user's manual
		ERNT-ASLT62DA	
High-speed counter module conversion adapter	1-module type	**ERNT-ASLTD61**	Conversion adapter (main body), mounting bracket, mounting bracket screws (2), terminal block cover, user's manual
		ERNT-ASLTD62	
Base adapter		**ERNT-ASLB38**	Base adapter (main body), base adapter mounting screws (4), retaining clip (2), user's manual
		ERNT-ASLB35	
		ERNT-ASLB33	
		ERNT-ASLB32	
		ERNT-ASLBJ	
		ERNT-ASLB68	
		ERNT-ASLB65	
		ERNT-ASLB58	
		ERNT-ASLB55	
		ERNT-ASLB52	

MELSEC-AnS Series ⇨ MELSEC-Q Series Upgrade Tool

Product name		Model	Product configuration
Input/Output module conversion adapter	1-slot type	**ERNT-ASQTXY10**	Conversion adapter (main body), mounting bracket, mounting bracket screws (2), terminal block cover, user's manual
		ERNT-ASQTX40	
		ERNT-ASQTX80	
		ERNT-ASQTY22	
		ERNT-ASQTY40	
		ERNT-ASQTY50	
		ERNT-ASQTY80	
	2-slot type	**ERNT-ASQTX20**	Conversion adapter (main body), mounting bracket, mounting bracket screws (4), user's manual
		ERNT-ASQTY60	
		ERNT-ASQTY60E	
Analog / High-speed counter / Temperature input module conversion adapter	1-slot type	**ERNT-ASQT64AD**	Conversion adapter (main body), mounting bracket, mounting bracket screws (2), terminal block cover, user's manual
		ERNT-ASQT68AD	
		ERNT-ASQT62DA	
		ERNT-ASQT68DA	
		ERNT-ASQT68AD-G	Conversion adapter (main body), support flange mounting screw (1), terminal block cover, user's manual
		ERNT-ASQT63ADA	Conversion adapter (main body), mounting bracket, mounting bracket screws (2), terminal block cover, user's manual
		ERNT-ASQTD61	Conversion adapter (main body), mounting bracket, mounting bracket screws (2), support flange screw (1), terminal block cover, user's manual
		ERNT-ASQTD62	
		ERNT-ASQTD62D	
		ERNT-ASQT68TD-H01	Conversion adapter (main body), support flange screw (1), terminal block cover, user's manual
		ERNT-ASQT68TD-H02	
		ERNT-ASQT62RD	Conversion adapter (main body), mounting bracket, mounting bracket screws (2), terminal block cover, user's manual
		ERNT-ASQT64TCTT	Conversion adapter, mounting bracket, mounting bracket screws (2), terminal block cover, user's manual, cold junction temperature compensation resistor (ERNT-ASQT6☐TCTT only)
		ERNT-ASQT64TCRT	
		ERNT-ASQT62TCTT	
		ERNT-ASQT62TCRT	
	1-slot type + Conversion cable	**ERNT-ASQT64TCTTBW**	Conversion adapter, mounting bracket, mounting bracket screws (2), terminal block cover, disconnection detection connector conversion cable, disconnection detection connector conversion cable screws (2), user's manual, cold junction temperature compensation resistor (ERNT-ASQT6☐TCTTBW only)
		ERNT-ASQT64TCRTBW	
		ERNT-ASQT62TCTTBW	
		ERNT-ASQT62TCRTBW	
Base adapter		**ERNT-ASQB38N**	Base adapter (main body), MELSEC-Q series base unit mounting screws (4), base adapter screws (4), user's manual
		ERNT-ASQB35N	
		ERNT-ASQB33N	
		ERNT-ASQB32N	
		ERNT-ASQB00JN	
		ERNT-ASQB68N	
		ERNT-ASQB65N	
		ERNT-ASQB58N	
		ERNT-ASQB55N	
		ERNT-ASQB52N	
		ERNT-ASQB38N-S1	Base adapter (main body), base adapter screws (4), user's manual
		ERNT-ASQB35N-S1	
		ERNT-ASQB33N-S1	
Conversion adapter DIN rail mounting bracket		**ERNT-ASQDIN3868**	Conversion adapter DIN rail mounting bracket (main body), screws (4), user's manual
		ERNT-ASQDIN356500J	
		ERNT-ASQDIN3355	
		ERNT-ASQDIN52	Conversion adapter DIN rail mounting bracket (main body), screws (3), user's manual

SYSMAC C Series ⇨ MELSEC-Q Series Upgrade Tool

Product name		Model	Product configuration
Conversion adapter	1-slot type	**ERNT-CQTX121**	Conversion adapter (main body), mounting bracket, mounting bracket screws (2), user's manual
		ERNT-CQTX112213	
		ERNT-CQTX215218	
		ERNT-CQCX218501	Conversion adapter (main body), user's manual
		ERNT-CQCX114219	
		ERNT-CQTY221	Conversion adapter (main body), mounting bracket, mounting bracket screws (2), user's manual
		ERNT-CQTY226	
		ERNT-CQTY219217	
		ERNT-CQTY411	
		ERNT-CQTY412	
		ERNT-CQTY414218	
		ERNT-CQCY415	Conversion adapter (main body), user's manual
		ERNT-CQCY501	
		ERNT-CQCY213	
	2-slot type	**ERNT-CQTX122**	Conversion adapter (main body), mounting bracket, mounting bracket screws (4), user's manual
		ERNT-CQTY224	
		ERNT-CQTY225	
		ERNT-CQTY218	
Conversion adapter support flange		**ERNT-QF12**	Conversion adapter support flange (main body), screws (2)
		ERNT-QF8	
		ERNT-QF5	
Base adapter		**ERNT-CQB081**	Base adapter (main body), MELSEC-Q series base unit screws (4), user's manual
		ERNT-CQB051	
		ERNT-CQB031	

SHARP or YASKAWA Electric Programmable Controller ⇨ MELSEC-Q Series Upgrade Tool

Product name		Model	Product configuration
Conversion adapter	1-slot type	**ERNT-1JQ11N12N**	Conversion adapter (main body), mounting bracket, mounting bracket screws (2), user's manual
		ERNT-1JQ12S	
		ERNT-1JQ13S	
		ERNT-1JQ32N34N	
		ERNT-1JQ32S	
		ERNT-1JQ32SC62SC	Conversion adapter (main body), user's manual
		ERNT-1JQ64NC	
	2-slot type	**ERNT-1JQ31N34S**	Conversion adapter (main body), mounting bracket, mounting bracket screws (4), user's manual
		ERNT-1JQ33S	
	1-slot type	**ERNT-2JQ210NS**	Conversion adapter (main body), mounting bracket, mounting bracket screws (2), user's manual
		ERNT-2JQ212S	Conversion adapter (main body), mounting bracket, mounting bracket screws (2), external power supply connector, user's manual
		ERNT-2JQ234N264N	Conversion adapter (main body), mounting bracket, mounting bracket screws (2), user's manual
		ERNT-2JQ232S262S	Conversion adapter (main body), mounting bracket, mounting bracket screws (2), user's manual
	1-slot type	**ERNT-1Y2Q501**	Conversion adapter (main body), mounting bracket, mounting bracket screws (2), user's manual
		ERNT-1Y2Q601611	
		ERNT-1Y2Q600	
		ERNT-1Y2Q500	
		ERNT-1Y2Q602606	
		ERNT-1Y2Q615625	Conversion adapter (main body), user's manual
	2-slot type	**ERNT-1Y2Q505**	Conversion adapter (main body), mounting bracket, mounting bracket screws (2), user's manual
		ERNT-1Y2Q904914	Conversion adapter (main body), mounting bracket, mounting bracket screws (4), user's manual

Non-Mitsubishi Programmable Controller ⇨ MELSEC-Q Series Upgrade Tool

Product name		Model	Product configuration
Universal conversion adapter	1-slot type	**ERNT-AQTB20**	Universal conversion adapter, mounting bracket, mounting bracket screws (2), terminal block, user's manual
		ERNT-AQTB20-S1	
		ERNT-AQTB38	
		ERNT-AQTB38-E	Universal conversion adapter, terminal block, user's manual
		ERNT-ASQTB20	Universal conversion adapter, mounting bracket, mounting bracket screws (2), terminal block, user's manual

Memo

Warranty

Please confirm the following product warranty details prior to product use.

Gratis Warranty Terms and Gratis Warranty Range

If any fault or defect (hereinafter referred to as “Failure”) attributable to Mitsubishi Electric Engineering should occur within the gratis warranty period, Mitsubishi Electric Engineering shall repair the product free of charge via the distributor from whom you made your purchase.
Should the repair require a business trip, a charge will be incurred for the expense required for the dispatch of an engineer (domestic support only).
Further, onsite readjustments and testing associated with failed module replacement shall be outside the scope of responsibility of Mitsubishi Electric Engineering.

■Gratis Warranty Period

The gratis warranty period of this product shall be one (1) year from the date of purchase or delivery to the designated place.
Note that after manufacture and shipment from Mitsubishi Electric Engineering, the maximum distribution period shall be six (6) months, and the gratis warranty period after manufacturing shall be limited to eighteen (18) months. Further, the gratis warranty period for repaired products shall not exceed the gratis warranty period of the product prior to repair.

■Gratis Warranty Range

(1) The gratis warranty range shall be limited to normal use based on the usage conditions, methods and environment, etc., defined by the terms and precautions, etc., given in the instruction manual, user’s manual, and caution labels on the product.

(2) In the following cases, a repair fee shall be applied even if within the gratis warranty period.

1) Failure resulting from inappropriate storage or handling, carelessness or negligence by the user, or Failure caused by the user’s hardware or software design.
2) Failure caused by unapproved modifications, etc., to the product by the user.
3) Failure that could have been avoided if, when the Mitsubishi Electric Engineering product was assembled into the user’s device, safeguards defined by legal regulations applicable to the user’s device or functions or structures considered standard by the industry had been provided.
4) Failure recognized as preventable if the consumed products specified in instruction manuals, etc., were normally maintained or replaced.
5) Failure caused by external factors beyond anyone’s control such as fires or abnormal voltage, and Failure caused by Force Majeure such as earthquakes, lightning, or wind and water damage.
6) Failure caused by reasons unpredictable by scientific technology standards at the time of shipment from Mitsubishi Electric Engineering.
7) Any other failure not attributable to Mitsubishi Electric Engineering or found by the user to not be attributable to Mitsubishi Electric Engineering.

Warranty period after discontinuation of production (fee applied)

(1) The period in which product repair (fee applied) is available is seven (7) years after product discontinuation. Discontinuation of production shall be reported by Mitsubishi Electric Engineering sales services.

(2) Product supply (including spare parts) is not possible after production has been discontinued.

Overseas Services

Overseas services are out of scope.

Exclusion of opportunity loss and secondary loss from warranty liability

Regardless of the gratis warranty period, Mitsubishi Electric Engineering shall not be liable for compensation for damages arising from causes not attributable to Mitsubishi Electric Engineering, opportunity losses or lost profits incurred by the user due to Failures of Mitsubishi Electric Engineering products, damages or secondary damages arising from special circumstances, whether foreseen or unforeseen by Mitsubishi Electric Engineering, compensation for accidents, compensation for damages to products other than Mitsubishi Electric Engineering products, or compensation for replacement work, readjustment of onsite machinery and equipment, startup test runs or other duties carried out by the user.

Changes in product specifications

The specifications given in the catalogs, manuals, and technical documents are subject to change without notice.

Product application

(1) This product shall be used in applications that will not lead to a major accident even in the unlikely event any failure or defect should occur in the product in which the product is incorporated, and shall be systematically provided with external backup and fail-safe functions that operate in the event of any failure or defect.

(2) This product has been designed and manufactured as a general-purpose product for general industry applications, etc. Thus, the product shall be excluded from use in applications in which the public could be greatly affected such as the applications of the nuclear and other power plants operated by the respective power companies, and applications in which a special quality assurance system is required, such as the applications of railway companies or government or other public offices. The product shall also be excluded from use in aircraft, medical applications, incineration and fuel devices, manned transport devices, equipment for recreation and amusement, and safety devices, in which human life or assets could be greatly affected.
Note that if the user consults with Mitsubishi Electric Engineering in advance with regard to such an application and the user accepts that the application is to be limited and a special quality is not to be required, application shall be made possible upon exchange of required documents.

Related catalogs

Various catalogs are provided that describe the detailed information of related products. Contact your nearest sales office.

■FA Goods General Catalog
Devices for wire saving and process time reduction
(MEIC098E-136)

- Conversion module for DC I/O
- Terminal module for DC I/O input/output type
- Conversion module for Analog I/O
- Conversion module for high-speed counter
- Cable for positioning module
- Conversion Module for MELSEC-L CPU
- Analog signal converter input/output type
- Goods for MELSEC iQ-F /MELSEC-F FX Series

■Mitsubishi Programmable Controllers
MELSEC-A/QnA Series Transition Guide
(L(NA)08077E)

Includes various information related to other Q series large type base / Q series I/O module upgrades.

■Mitsubishi Programmable Controllers
MELSEC-AnS/QnAS (Small Type) Series Transition Guide
(L(NA)08236E)

Includes various information related to other Q series large type base / L series space module upgrades.

Precautions for Choosing the Products

This catalog explains the typical features and functions of the Mitsubishi Electric Programmable Controller Upgrade Tool and does not provide restrictions and other information on usage and module combinations. When using the products, always read the user's manuals and operating manuals of the products. Mitsubishi Electric Engineering will not be held liable for damage caused by factors found not to be the cause of Electric Engineering; machine damage or lost profits caused by faults in the Mitsubishi Electric Engineering products; damage, secondary damage, accident compensation caused by special factors unpredictable by Mitsubishi Electric Engineering; damages to products other than Mitsubishi Electric Engineering products; and to other duties.

⚠ For safe operations

- This product has been manufactured as a general-purpose part for general industries, and has not been designed or manufactured to be incorporated in a device or system used in purposes related to human life.
- Before using the product for special purposes such as nuclear power, electric power, aerospace, medicine or passenger movement vehicles, consult with Mitsubishi Electric Engineering.
- This product has been manufactured under strict quality control. However, when installing the product where major accidents or losses could occur if the product fails, install appropriate backup or failsafe functions in the system.

MITSUBISHI ELECTRIC ENGINEERING

[NAGOYA ENGINEERING OFFICE] 139,Shimoyashikicho,Shimoyashiki,Kasugai,Aichi,486-0906,Japan

Before using this product, ensure the safety in case of failure. We shall not bear any responsibility for consequential damages caused by failure of the product.

NA C095E·134E(1710)MEE (SAN C044·068R(1702))

New publication,effective Oct.2017
Specifications subject to change without notice.